WIRING DIAGRAM

PREVOST

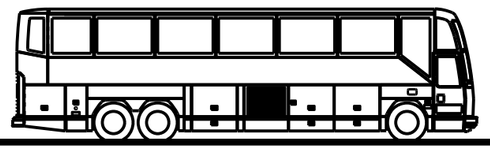

H3-41 & H3-45 BUS

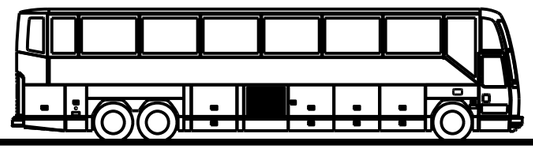

REFERENCE: MODEL STANDARD 2003		NO: D060976	
EFF. W/ OC* 2000090	PRIOR TO / OC*	DR. SYLVAIN DESBIENS	DATE: 02-04-15
EFF. W/ VEH.* 4-4511,4-4705,4-4758	PRIOR TO / VEH.*	CK. ERIC LANDRY	APPR. ROLAND LAPOINTE

REV.	DATE	DESCRIPTION	PAGE	BY	CK.	APPR.
00	02-04-15	INTRODUCTION NEW COOLING SYSTEM		S.D.	E.L.	
01	03-02-27	ZF TRANSMISSION & GENERAL UPDATE	C1,E,F,G,H,I,L,2.1,5.1, 6.3,9.3,18.1,18.1SP2, 25.2	A.S.	E.L.	
02	03-06-05	ZF TRANSMISSION MODIFICATIONS & GENERAL UPDATE	B1,C1,C2,F,H,L,1.1,2.1, 4.1,4.1SP1,4.1SP2,5.1, 5.1SP1,5.1SP2,6.3,11.2, 13.2,16.1,17.1SP2,18.1, 20.1,20.2,28.1	A.S.	E.L.	
03	03-08-15	NEW VIDEO PANEL ARRANGEMENT - OC#2003038 EFF: 4-4821	C2, D, G3,20.1, 20.3, 20.3SP1, 20.3SP2,20.4 20.5, 20.6, 20.9, 20.10	M.L.	S.D.	
04	03-08-15	NEW FUSE BLOCK W/O LED - OC#2003033 EFF: 4-4811	E,G,L,2.1,5.1,6.1,6.3, 7.2,8.1,9.2,9.3,11.1, 11.2,11.3,11.4,12.1, 14.1,17.1,18.1,19.1, 20.5,22.1,23.1,24.2, 24.3,25.2,26.1+ 7.2SP1,17.1SP1, 17.1SP2,23.1SP1 26.2SP1	E.L.	S.D.	
		ENGINE CABLE SINGLE TO DOUBLE BRAIS OC#2003075 EFF:4-4831	NO PAGES MODIFIED	A.S.	S.D.	
		ELECT. FR. JCT BOX MODIF. OC#2003028 EFF:4-4834	C1	A.S.	S.D.	
05	03-09-09	VIDEO STABILIZER REMOVED AND NEW DISTRIBUTION AMPLIFIER (DUAL INPUT) WITH DVD OC#2003099 AND NEW DVD OC#2003098 EFF: 4-4826	L, 20.3, 20.3SP1 20.3SP2, 20.8, 20.8SP1 20.9, 20.10	M.L.	S.D.	
06	03-10-28	CORRECTION NEW DISTRIBUTION AMPLIFIER OC#2003099 EFF. 4-4826	20.3, 20.3SP1 20.3SP2, 20.10	M.L.	E.L.	

PREVOST H3-41 & H3-45 BUS

NO: D060976 p. 2/2

REV.	DATE	DESCRIPTION	PAGE	BY	CK.	APPR.
07	03-11-03	XENON LOW BEAM HEADLAMPS - OPTIONAL OC#2003030 EFF.#4-4852	C1,G,9.1,9.5	E.L.	S.D.	
		UPDATED PAGES : 1.1,4.1SP3,4.2,4.2SP1,7.2,7.2SP1,12.1,17.1SP1,20.1,20.1SP1	← SEE			
08	03-12-16	NEW COOLING 2004 DDEC V OC#2003055 PRELIM.#4-4829 EFF.#5-4867	B1,C1,E,G,H,I,1.1,1.2 3.1,5.1,5.1SP1,5.1SP2 6.1,6.3,9.3,19.1	S.D.	E.L.	
		PARKING BRAKE SR-7 VALVE - OC*2003063 PRELIM: 4-4863 EFF: 5-4867	8.1	E.L.	S.D.	
		A/C COMPRESSOR CONNECTOR - OC*2003089 PRELIM: NIL EFF: 5-4867	13.1	A.S.	E.L.	
		HEADLAMPS RESISTANCES - OC*2003108 PRELIM: NIL EFF: 5-4867	F,J,9.2,9.5	E.L.	S.D.	
		NEW HVAC PROGRAMMATION - OC*2003120 PRELIM: NIL EFF: 5-4867	N/A	E.L.	S.D.	
		UPDATED PAGES , SEE →	A, 21.1, 21.1 SP1	E.L.	S.D.	
09	04-01-12	SPECIAL PAGE REVISION ONLY - NO SPECIFIC EFF.	26.2SP1	A.S.	A.S.	
10	04-03-11	UPPER DEFROST RESISTOR OC#2003125 EFF.: 4-4884	J,22.1	E.L.		
		CLEARANCE LTS W/JIFFY SPLICES OC#2003118 EFF.: 4-4937	C1	E.L.	E.L.	
		UPDATED PAGES , SEE →	B1,4.2SP1,6.1,6.3, 13.2,20.2,	E.L.		
11	04-05-04	BOSCH ALT. C-399 ELIMINATED OC#2004020 EFF.: 4-4964	C1,G,4.2,4.2SP1	E.L.	E.L.	
		UPDATED PAGES , SEE →	C2, I,16.1,26.1			
12	04-06-01	INFO: NEW DVD & VIDEO DIST. BOX OC*2004036	NO PAGE	S.L.	E.L.	
		DRIVER'S DEFROST, DOUBLE MOTOR UNIT OC*2003144,OC*2003153	C1,E,F,G,H,1.1,13.1,13.1SP1	E.L.	E.L.	
		NEW HVAC CTRL MODULE OC*2004041 } EFF: 5-0017				
		KNEELING UP ALARME, ON NEW JERSEY ONLY OC*2004022 } EFF: 5-0017	18.1			
13	04-06-18	PROGRAMMABLE DIGITAL CLOCK OC* 2004045	14.1,14.1SP1	S.L.	E.L.	
14	04-07-08	UPDATE DIGITAL CLOCK	14.1,14.1SP1	S.L.	E.L.	
15	04-09-07	JAKE ON BRAKE PEDAL (LATCHED) 5-4993	E3, 5.1SP3, 19.1SP1	S.L.	E.L.	
		WINDOW AJAR O.C 2004075 EFF: 5-4367	G5,C1	E.O		
16	04-09-21	A/C COMPRESSOR CLUTCH CUT-OUT PRESS. SWITCH (5-0115,0116,0118)	E3,G2,13.1SP2	S.L.		
		SUBWOOFER W/O SEAT AUDIO & CROSSOVER (5-0081)	20.1SP5	S.L.		

WIRING DIAGRAM INDEX

A	A/C, HEAT & VENT. SYSTEM	Page:	13.1
	ALARM & SIGNAL	Page:	7.2
	ABS	Page:	21.1
	ARRANGEMENT - CABLE	Page:	B
	ARRANGEMENT - HARNESS	Page:	C1,C2
	ARRANGEMENT - SPARE WIRE	Page:	D
B	BACK-UP ALARM	Page:	9.3
	BACK-UP MONITOR	Page:	27.1
	BATTERY CHARGER	Page:	11.4
	BATTERY STANDARD AND 8D	Page:	1.2
C	CLUSTER	Page:	7.1
	CHARGING SYSTEM	Page:	4.2
	CIGAR LIGHTER	Page:	14.1
	CODE - CIRCUIT NUMBER	Page:	E
	CODE - CIRCUIT BREAKER	Page:	F
	CODE - CONNECTOR	Page:	G
	CODE - DIODE	Page:	H
	CODE - RELAY	Page:	I
	CODE - RESISTOR	Page:	J
	CODE - WIRING KEY	Page:	K
	CODE - FUSE	Page:	L
	CODE - MODULE	Page:	M
	CRUISE CONTROL - DDEC	Page:	5.1
	CB OPTION	Page:	20.5
D	DDEC III & IV	Page:	5.1
	DIGITAL CLOCK	Page:	14.1
	DISTRIBUTION 12V, 24V	Page:	1.1
	DISTRIB. 12V DISC., IGN & HOT WIRE	Page:	2.1
	DRIVER'S WINDOW LIFTER	Page:	14.1
E	ENGINE BLOCK HEATER	Page:	12.1
	ENGINE BRAKE SYSTEM	Page:	19.1
	ENGINE CONTROL	Page:	4.1
	ENTRANCE DOOR SEDAN	Page:	16.1
	ETHER COLD START	Page:	8.1
	EXTERIOR LIGHTIHG	Page:	9.1
F	FAN-CLUTCH RADIATOR	Page:	8.1
	FAST IDLE - DDEC	Page:	5.1
	FIRE DETECTOR	Page:	7.2
	FRONT DESTINATION SIGN	Page:	17.1
	FRONT CAMERA	Page:	20.6
	FUEL FILTER WATER DETECTOR	Page:	8.1
	FUEL PRIME PUMP	Page:	12.1
G	GALLEY ACCESSORIES	Page:	23.1
	GROUND SYSTEM	Page:	3.1
H	HIGH BUOY	Page:	18.1
	HOTESS CHIME	Page:	12.1
I	INTERIOR LIGHTING	Page:	11.1
	INTERCOM	Page:	27.1
K	KNEELING SYSTEM	Page:	18.1
L	LAVATORY	Page:	17.1
	LOW BUOY	Page:	18.1
	LUGGAGE DOOR LOCK	Page:	19.1
M	MIRROR-REAR VIEW	Page:	24.2
P	PARKING BRAKE SWITCH	Page:	8.1
	POWER 12V OUTLET	Page:	14.1
	PRE-HEATER WATER HEATER	Page:	26.1
	PRODRIVER	Page:	8.1
R	RETARDER - WORLD TRANSM.	Page:	19.1
S	SEAT AUDIO SYSTEM	Page :	20.7
	SOUND & VIDEO SYSTEM	Page:	20.1
	SPEAKER PASSENGER	Page:	20.2
	SPEEDOMETER	Page :	7.1
	STEERING CONTROL	Page:	15.1
	SUN VISOR	Page:	14.1
T	TELL TALE LIGHT MODULES	Page	28.1
	TRANSMISSION - WORLD	Page:	6.1
	TRNSMISSION ZF	Page:	6.3
	TACHYMETER	Page :	7.1
W	WHEEL CHAIR LIFT - RICON 9000	Page:	25.2
	WHEEL CHAIR LIFT - STEW. & STEV.	Page:	25.1
	WINDOW AJAR	Page:	7.2
	WINDSHIELD (UP) FAN DEFROSTOR	Page:	22.1
	WIPER & WASHER	Page:	10.1

WIRING DIAGRAM INDEX

A	A/C, HEAT & VENT. SYSTEM	Page:	13.1
	ALARM & SIGNAL	Page:	7.2
	ABS	Page:	21.1
	ARRANGEMENT - CABLE	Page:	B
	ARRANGEMENT - HARNESS	Page:	C1,C2
	ARRANGEMENT - SPARE WIRE	Page:	D
B	BACK-UP ALARM	Page:	9.3
	BACK-UP MONITOR	Page:	27.1
	BATTERY CHARGER	Page:	11.4
	BATTERY STANDARD AND 8D	Page:	1.2
C	CLUSTER	Page:	7.1
	CHARGING SYSTEM	Page:	4.2
	CIGAR LIGHTER	Page:	14.1
	CODE - CIRCUIT NUMBER	Page:	E
	CODE - CIRCUIT BREAKER	Page:	F
	CODE - CONNECTOR	Page:	G
	CODE - DIODE	Page:	H
	CODE - RELAY	Page:	I
	CODE - RESISTOR	Page:	J
	CODE - WIRING KEY	Page:	K
	CODE - FUSE	Page:	L
	CODE - MODULE	Page:	M
	CRUISE CONTROL - DDEC	Page:	5.1
	CB OPTION	Page:	20.5
D	DDEC	Page:	5.1
	DIGITAL CLOCK	Page:	14.1
	DISTRIBUTION 12V, 24V	Page:	1.1
	DISTRIB. 12V DISC., IGN & HOT WIRE	Page:	2.1
	DRIVER'S WINDOW LIFTER	Page:	14.1
E	ENGINE BLOCK HEATER	Page:	12.1
	ENGINE BRAKE SYSTEM	Page:	19.1
	ENGINE CONTROL	Page:	4.1
	ENTRANCE DOOR SEDAN	Page:	16.1
	ETHER COLD START	Page:	8.1
	EXTERIOR LIGHTIHG	Page:	9.1
F	FAN-CLUTCH RADIATOR	Page:	8.1
	FAST IDLE - DDEC	Page:	5.1
	FIRE DETECTOR	Page:	7.2
	FRONT DESTINATION SIGN	Page:	17.1
	FRONT CAMERA	Page:	20.6
	FUEL FILTER WATER DETECTOR	Page:	8.1
	FUEL PRIME PUMP	Page:	12.1
G	GALLEY ACCESSORIES	Page:	23.1
	GROUND SYSTEM	Page:	3.1
H	HIGH BUOY	Page:	18.1
	HOSTESS CHIME	Page:	12.1
I	INTERIOR LIGHTING	Page:	11.1
	INTERCOM	Page:	27.1
K	KNEELING SYSTEM	Page:	18.1
L	LAVATORY	Page:	17.1
	LOW BUOY	Page:	18.1
	LUGGAGE DOOR LOCK	Page:	19.1
M	MIRROR-REAR VIEW	Page:	24.2
P	PARKING BRAKE SWITCH	Page:	8.1
	POWER 12V OUTLET	Page:	14.1
	PRE-HEATER WATER HEATER	Page:	26.1
	PRODRIVER	Page:	8.1
R	RETARDER - WORLD TRANSM.	Page:	19.1
S	SEAT AUDIO SYSTEM	Page :	20.7
	SOUND & VIDEO SYSTEM	Page:	20.1
	SPEAKER PASSENGER	Page:	20.2
	SPEEDOMETER	Page :	7.1
	STEERING CONTROL	Page:	15.1
	SUN VISOR	Page:	14.1
T	TELL TALE LIGHT MODULES	Page	28.1
	TRANSMISSION - WORLD	Page:	6.1
	TRNSMISSION ZF	Page:	6.3
	TACHYMETER	Page :	7.1
W	WHEEL CHAIR LIFT - RICON 9000	Page:	25.2
	WHEEL CHAIR LIFT - STEW. & STEV.	Page:	25.1
	WINDOW AJAR	Page:	7.2
	WINDSHIELD (UP) FAN DEFROSTOR	Page:	22.1
	WIPER & WASHER	Page:	10.1

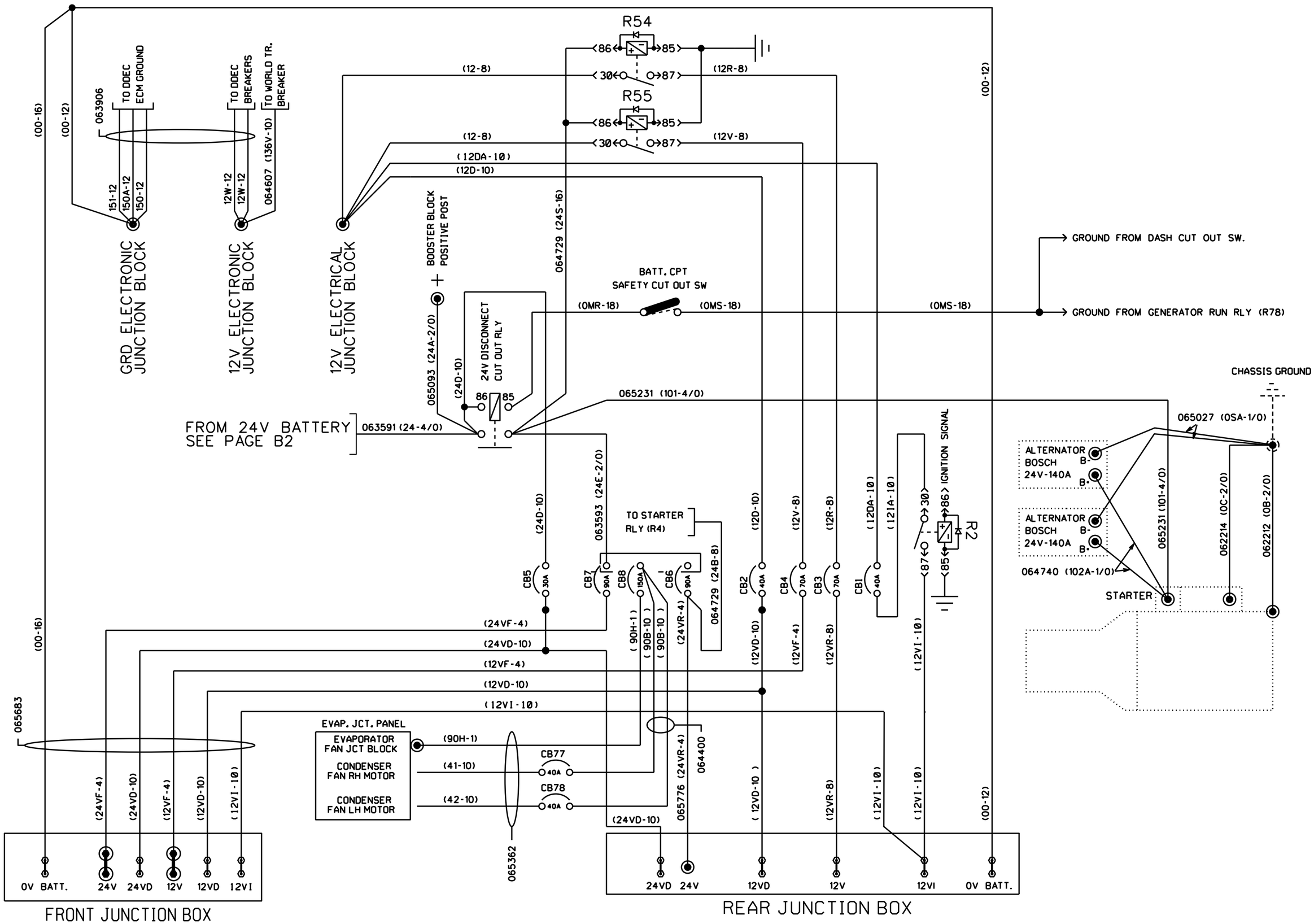

PREVOST	WIRING DIAGRAM	NO: D060976	PAGE: B1	REVISION 00

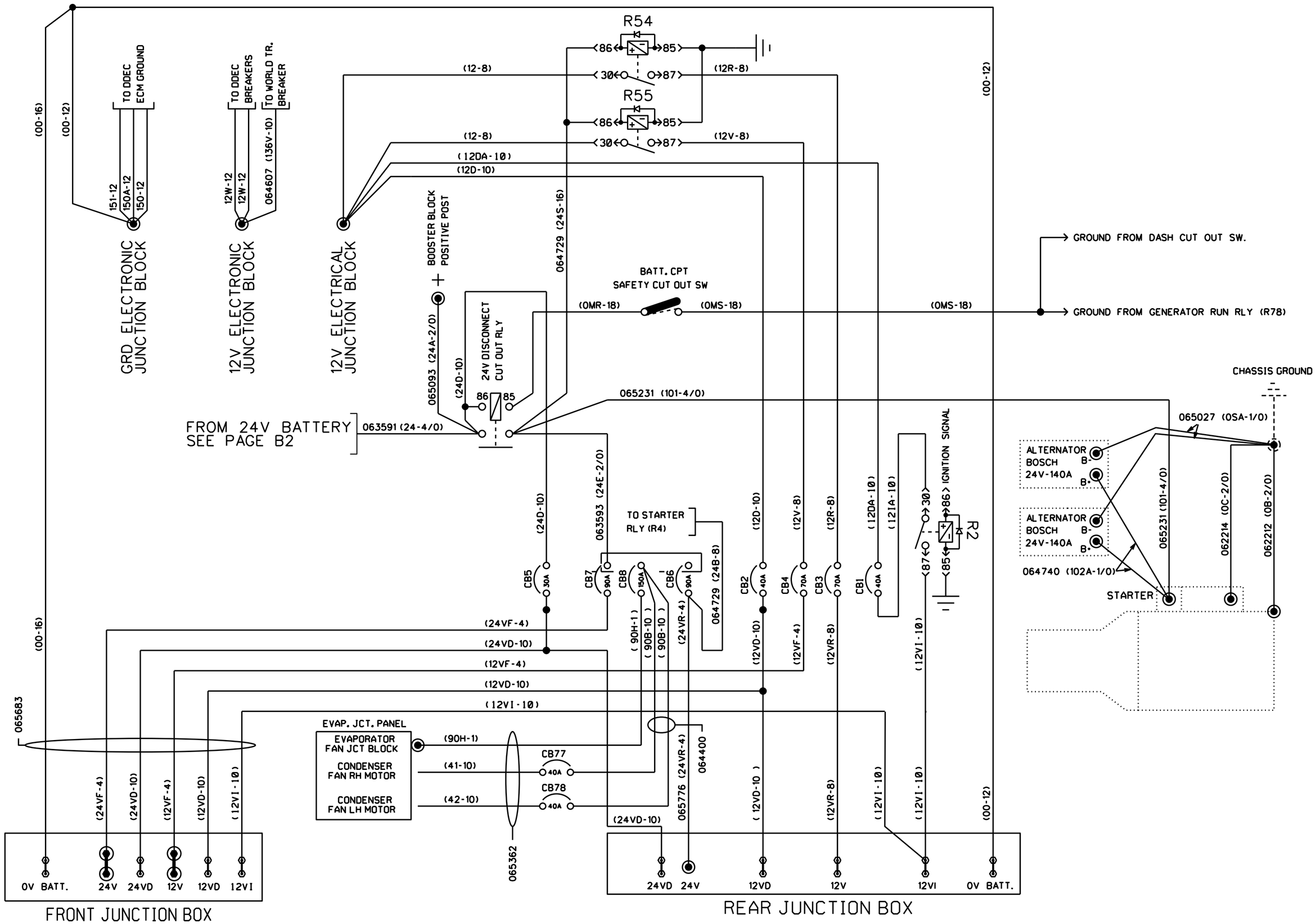

PREVOST	WIRING DIAGRAM	NO: D060976	PAGE: B1	REVISION 02

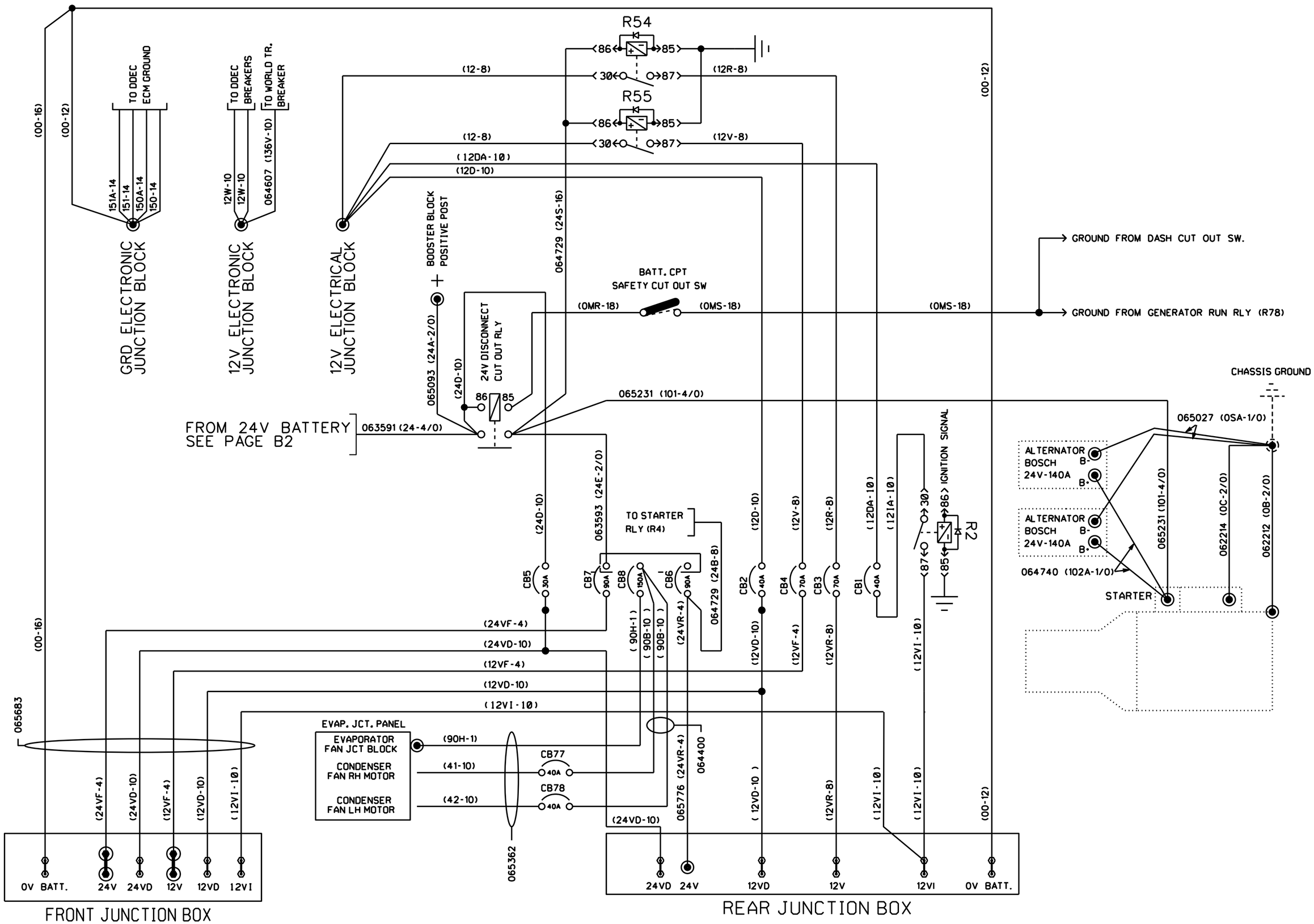

PREVOST	WIRING DIAGRAM	NO: D060976	PAGE: B1	REVISION 08

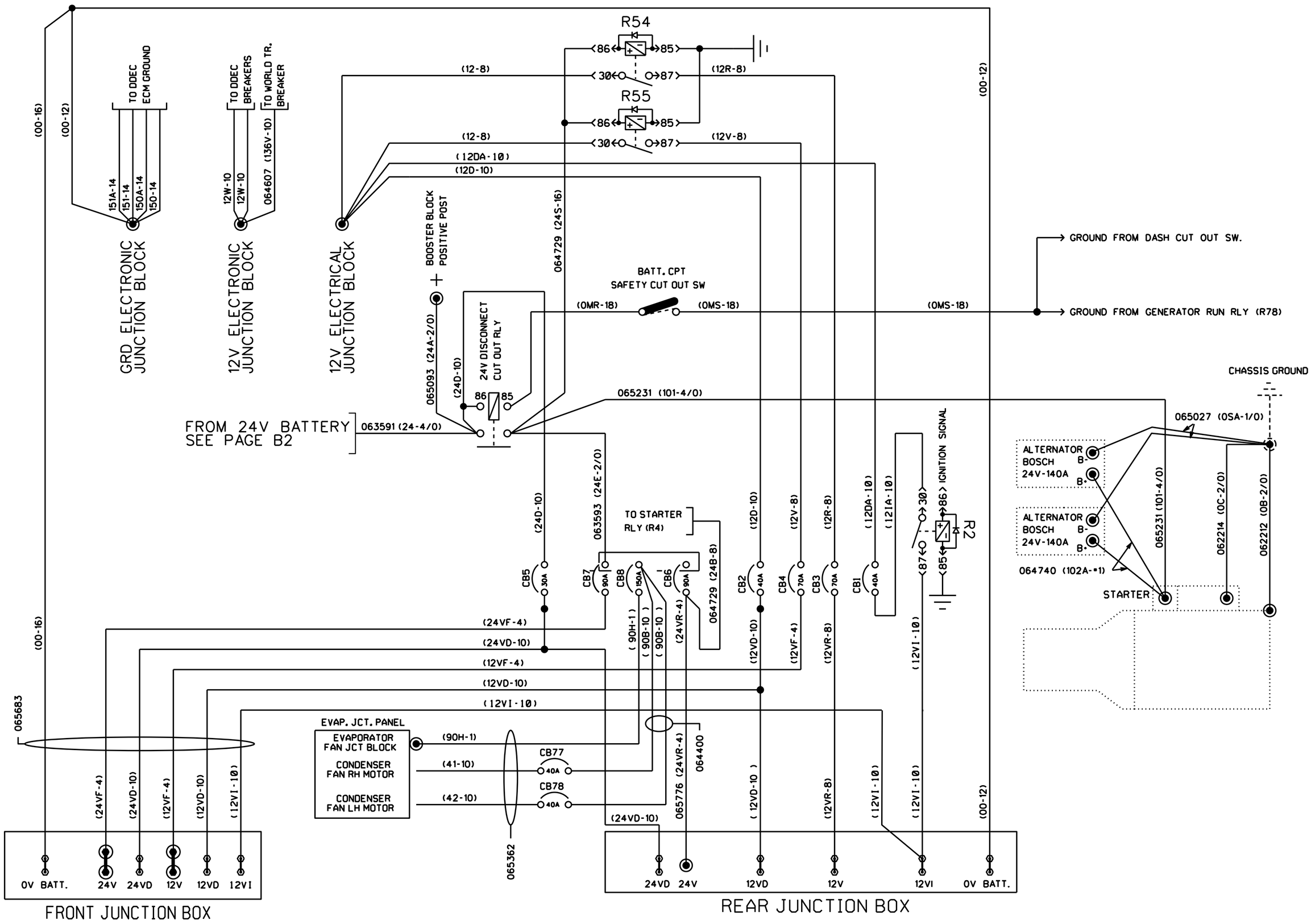

PREVOST	WIRING DIAGRAM	NO: D060976	PAGE: B1	REVISION 10

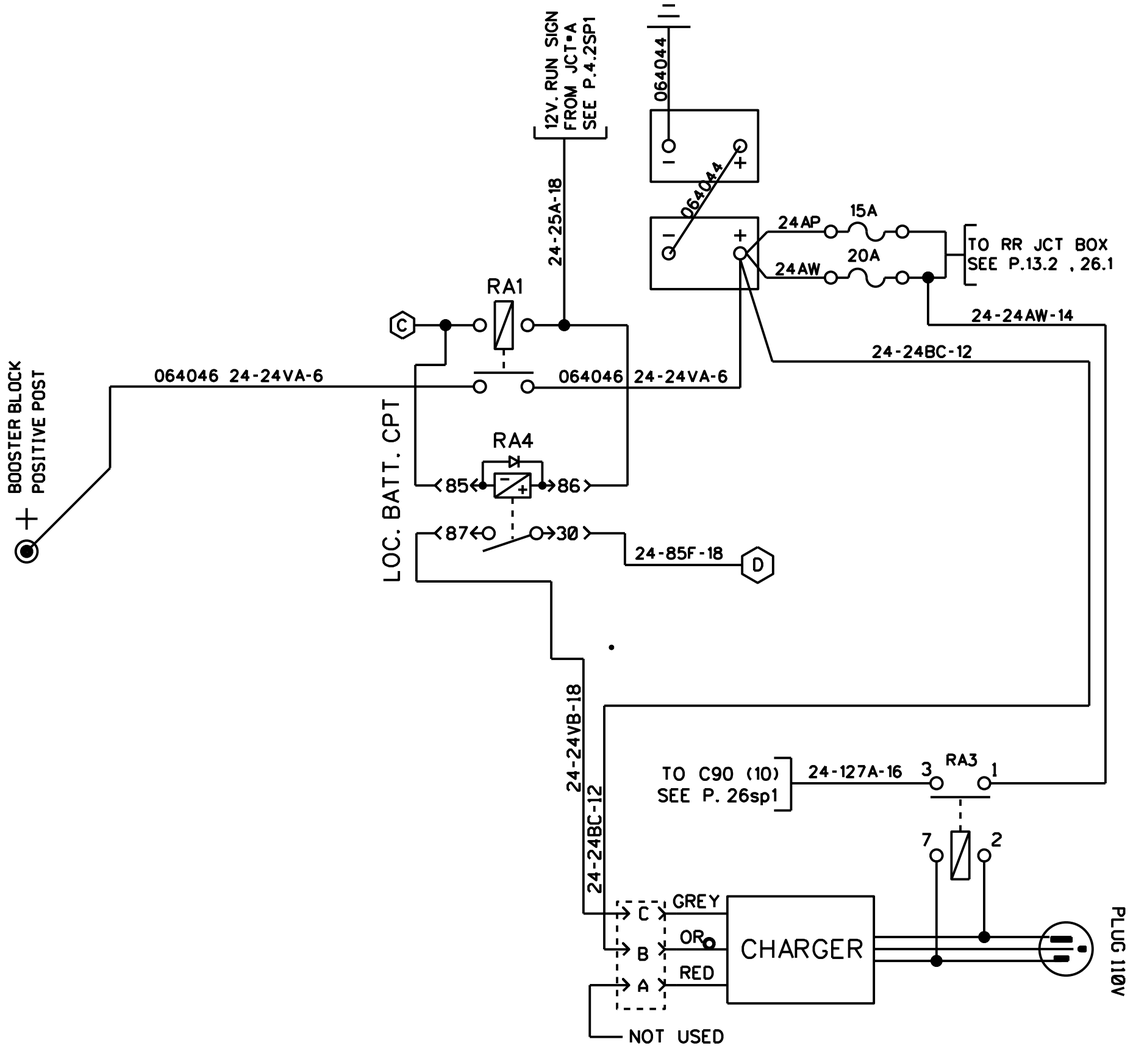

24V. BATTERY AUXILIARY WITH BATTERY CHARGER

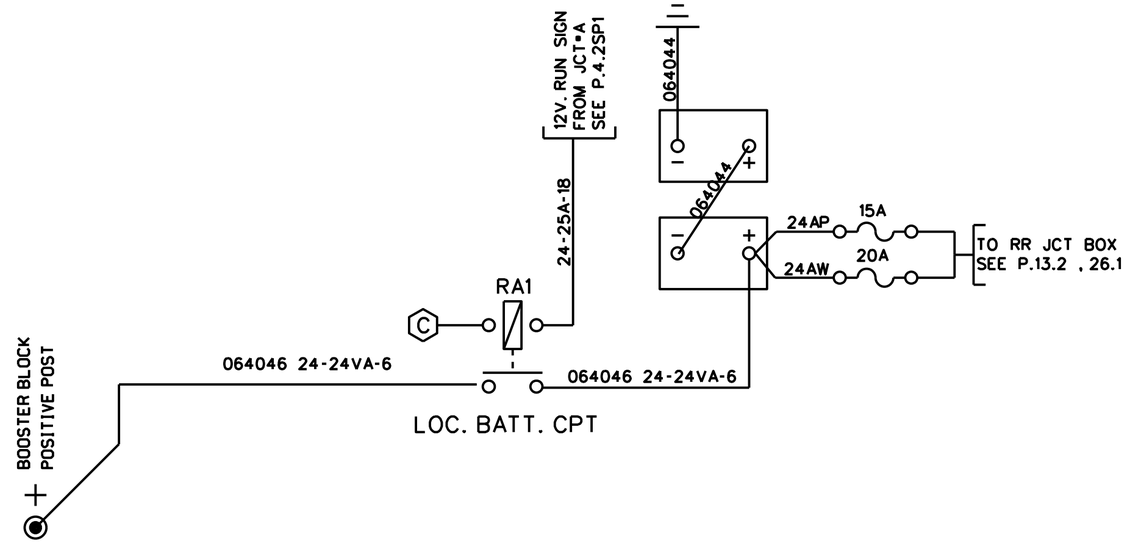

24V. BATTERY AUXILIARY

PREVOST	WIRING DIAGRAM	NO: D060976	PAGE: B1sp1	REVISION 00

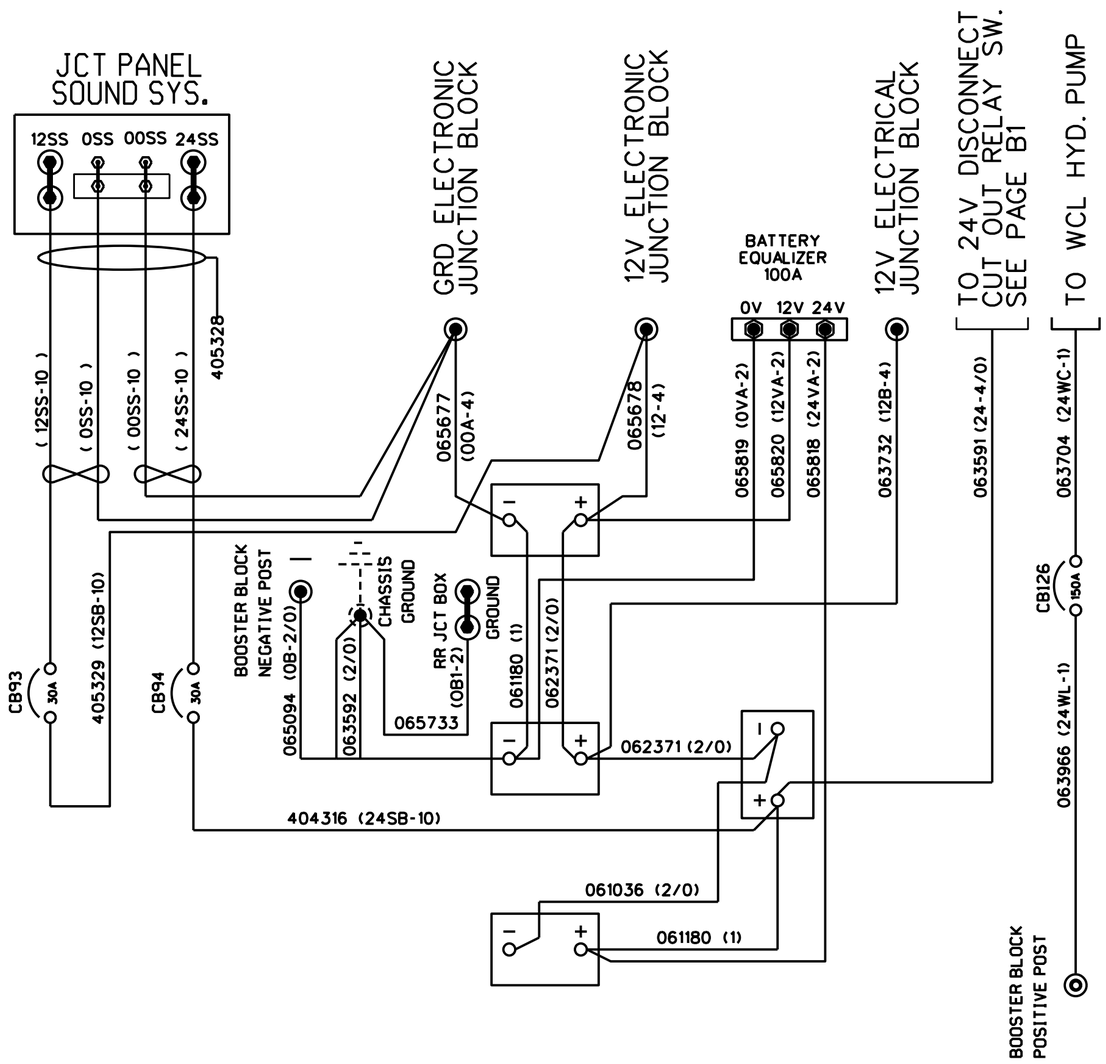

STANDARD BATTERIES

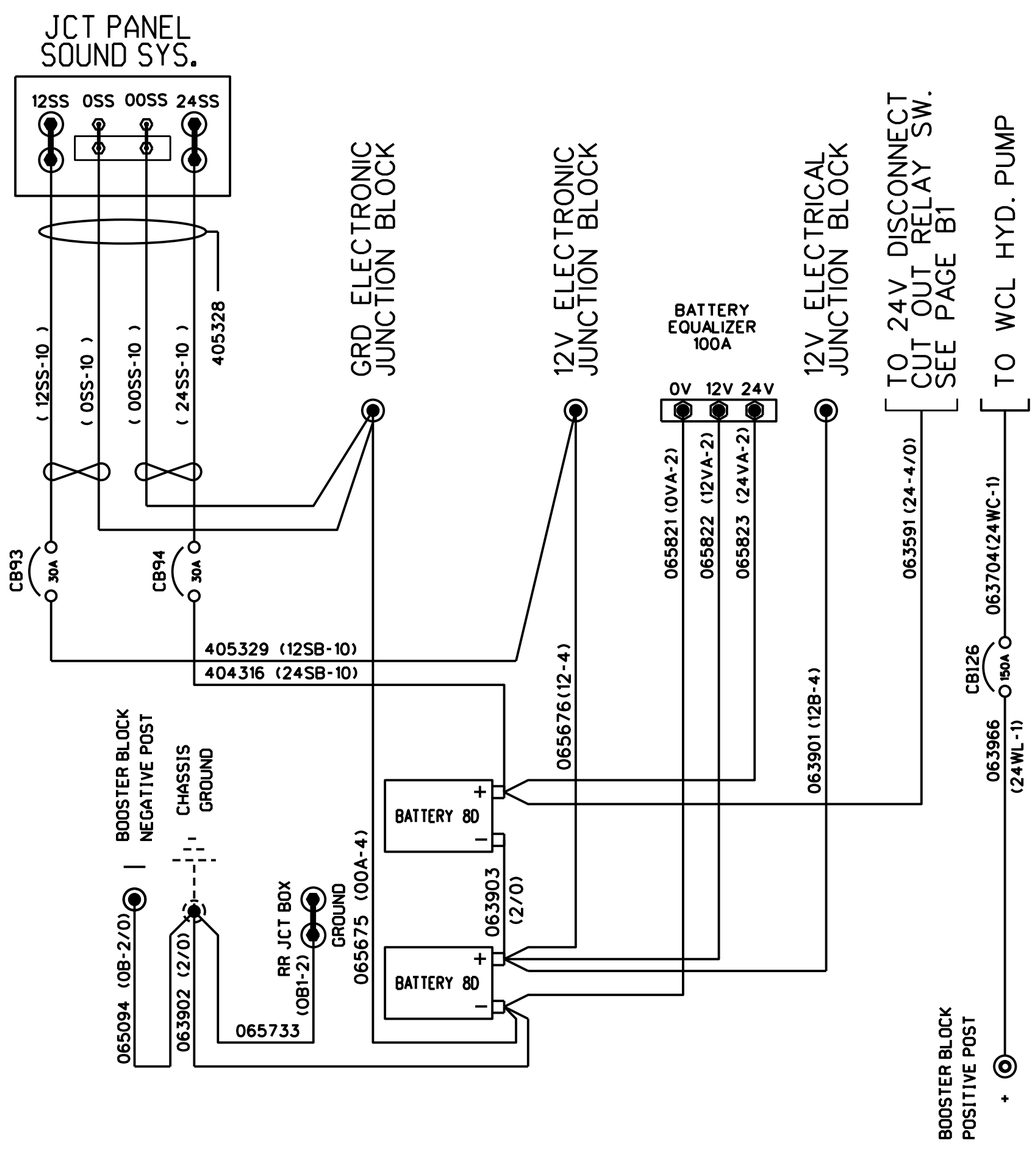

8D BATTERIES

PREVOST	WIRING DIAGRAM	NO: D060976	PAGE: B2	REVISION 00

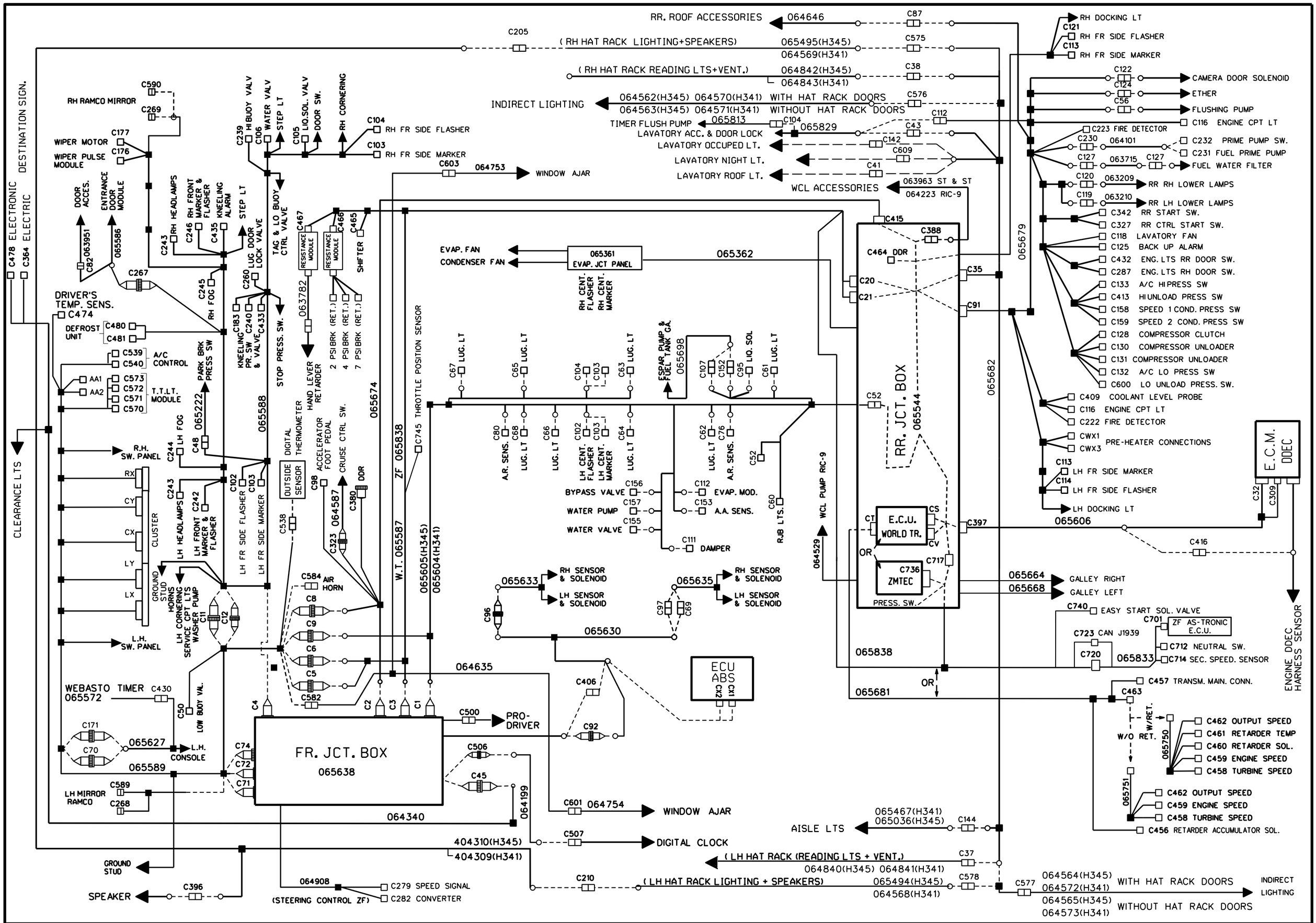

PREVOST	WIRING DIAGRAM	NO: D060976	PAGE: C1	REVISION 00

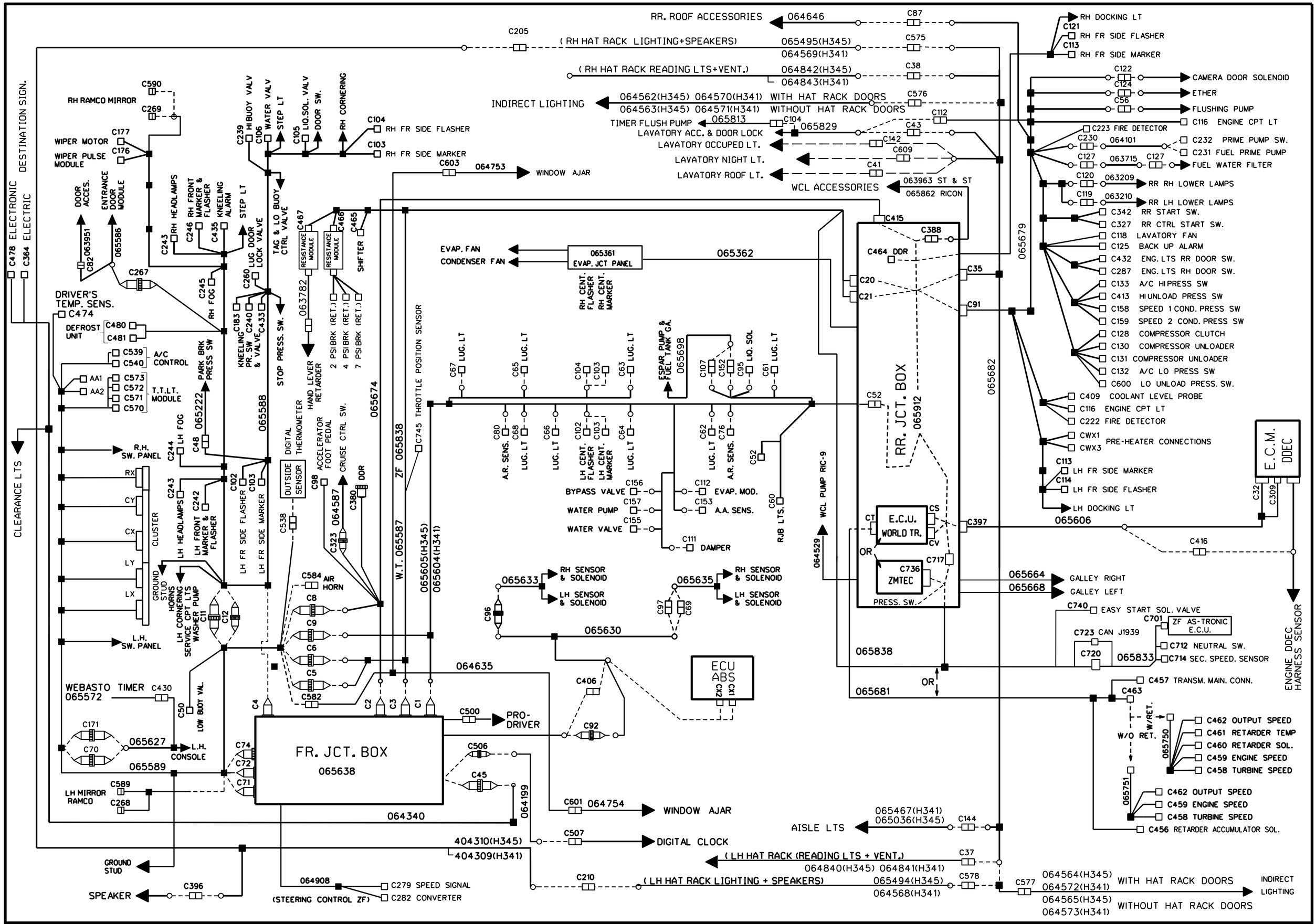

PREVOST	WIRING DIAGRAM	NO: D060976	PAGE: C1	REVISION 01

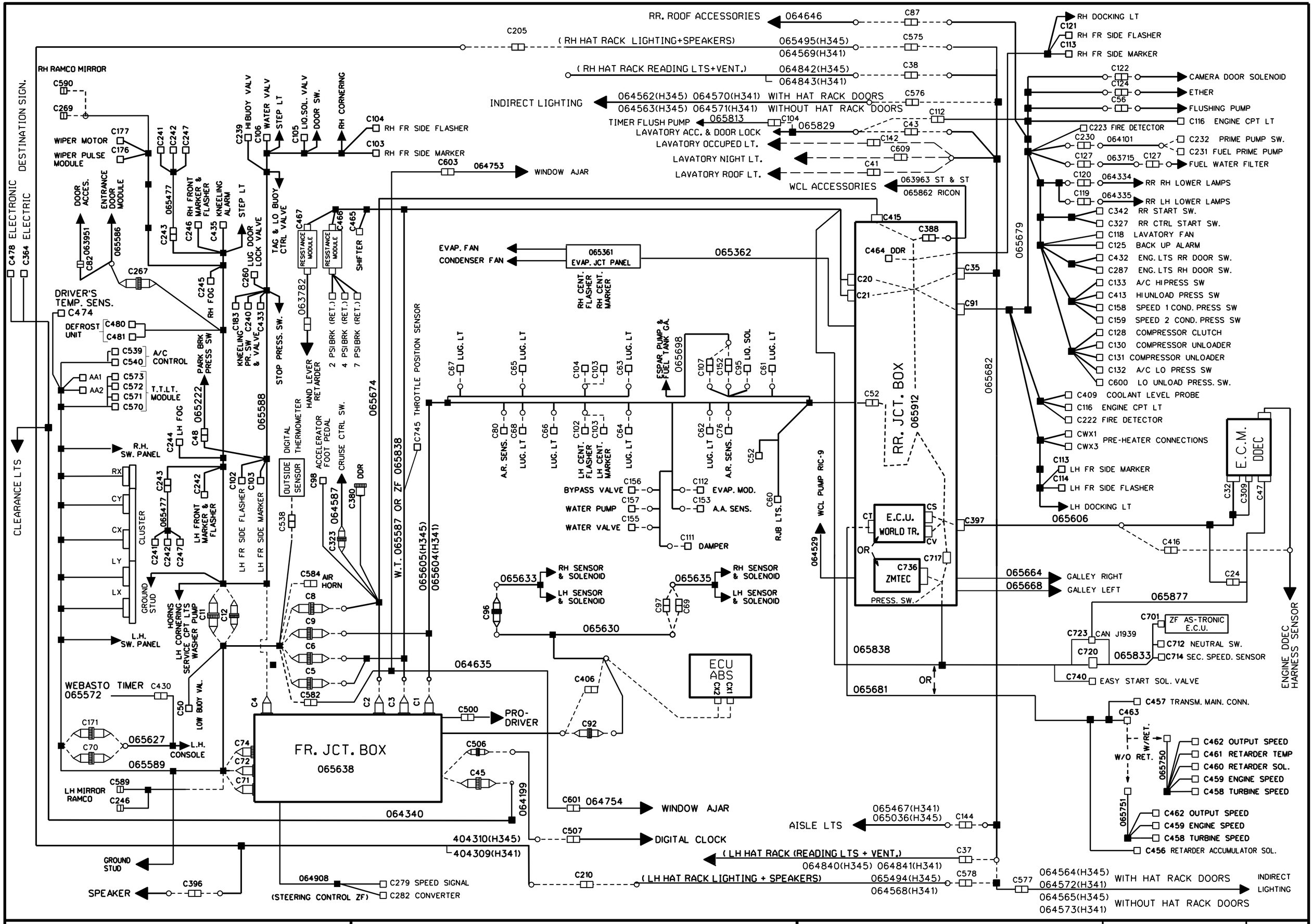

PREVOST	WIRING DIAGRAM	NO: D060976	PAGE: C1	REVISION 02

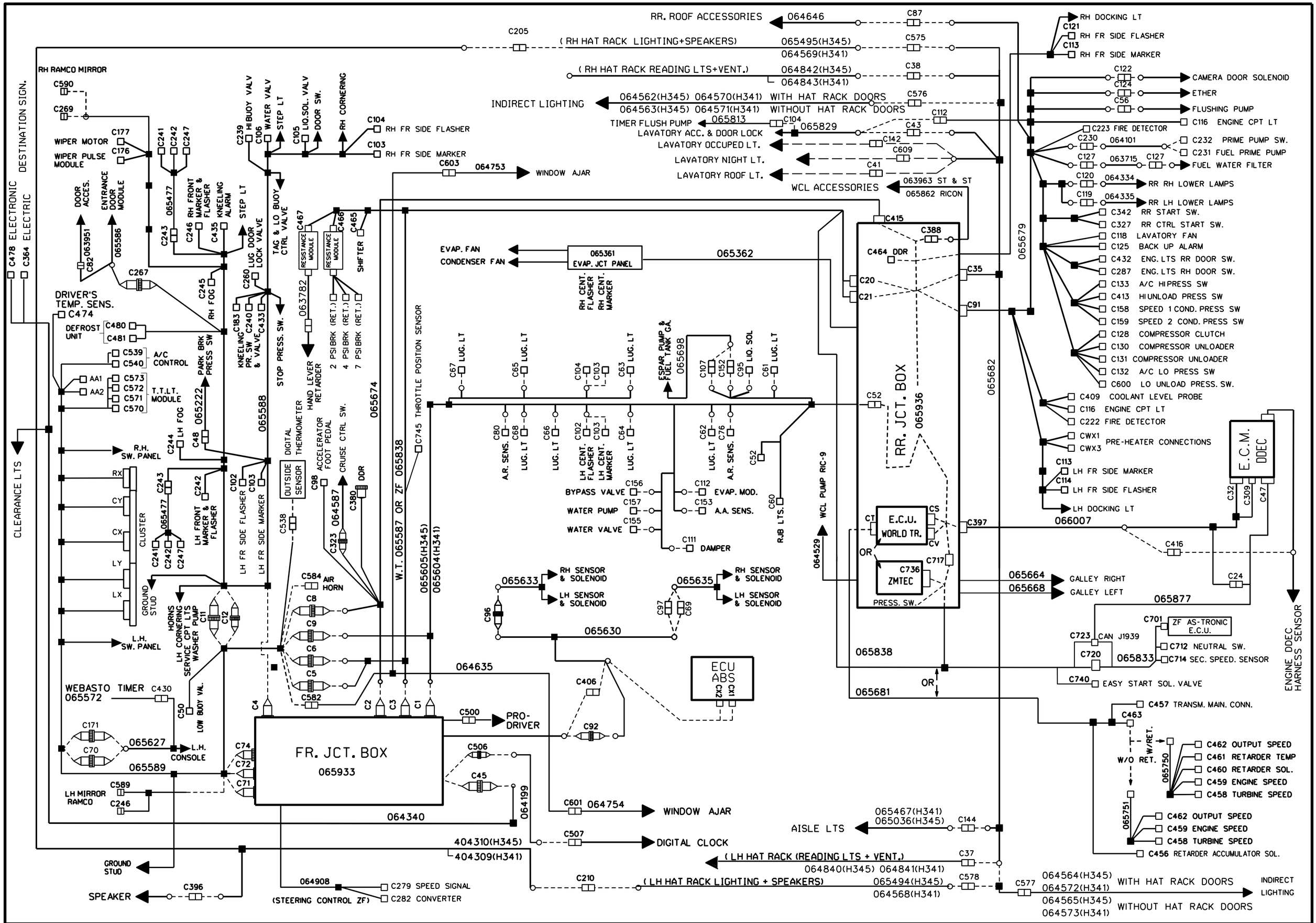

PREVOST	WIRING DIAGRAM	NO: D060976	PAGE: C1	REVISION 04

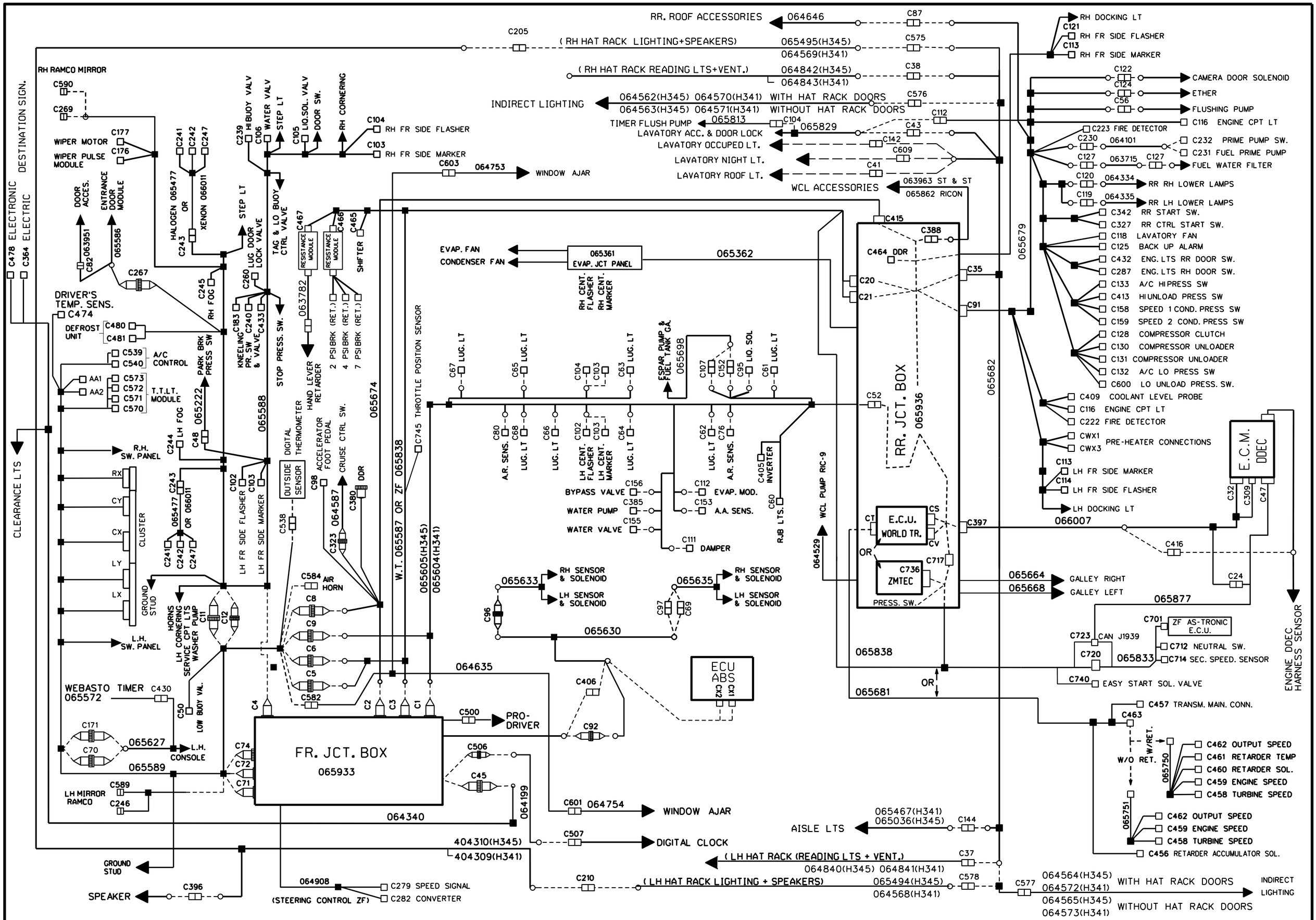

PREVOST	WIRING DIAGRAM	NO: D060976	PAGE: C1	REVISION 07

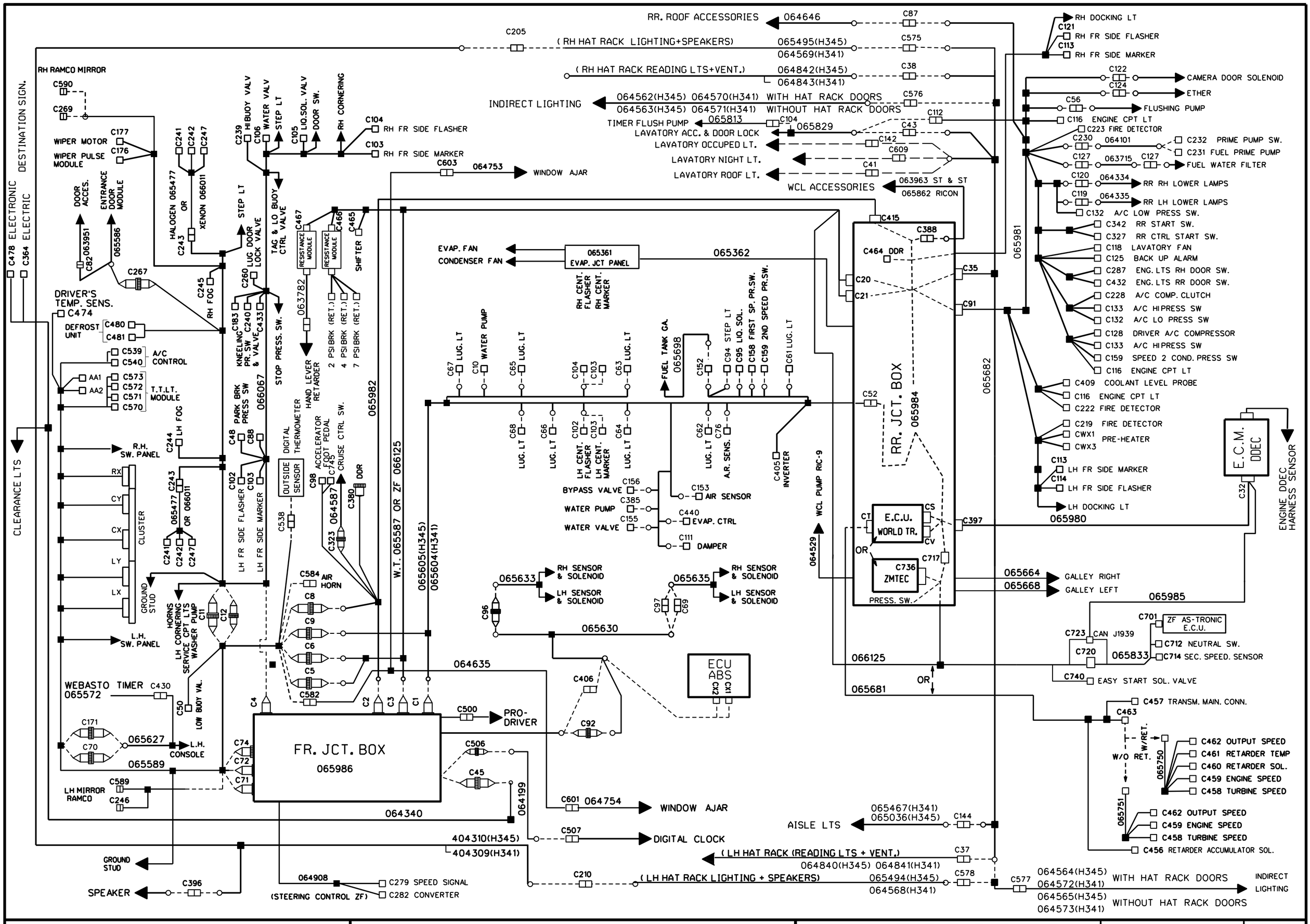

PREVOST	WIRING DIAGRAM	NO: D060976	PAGE: C1	REVISION 08

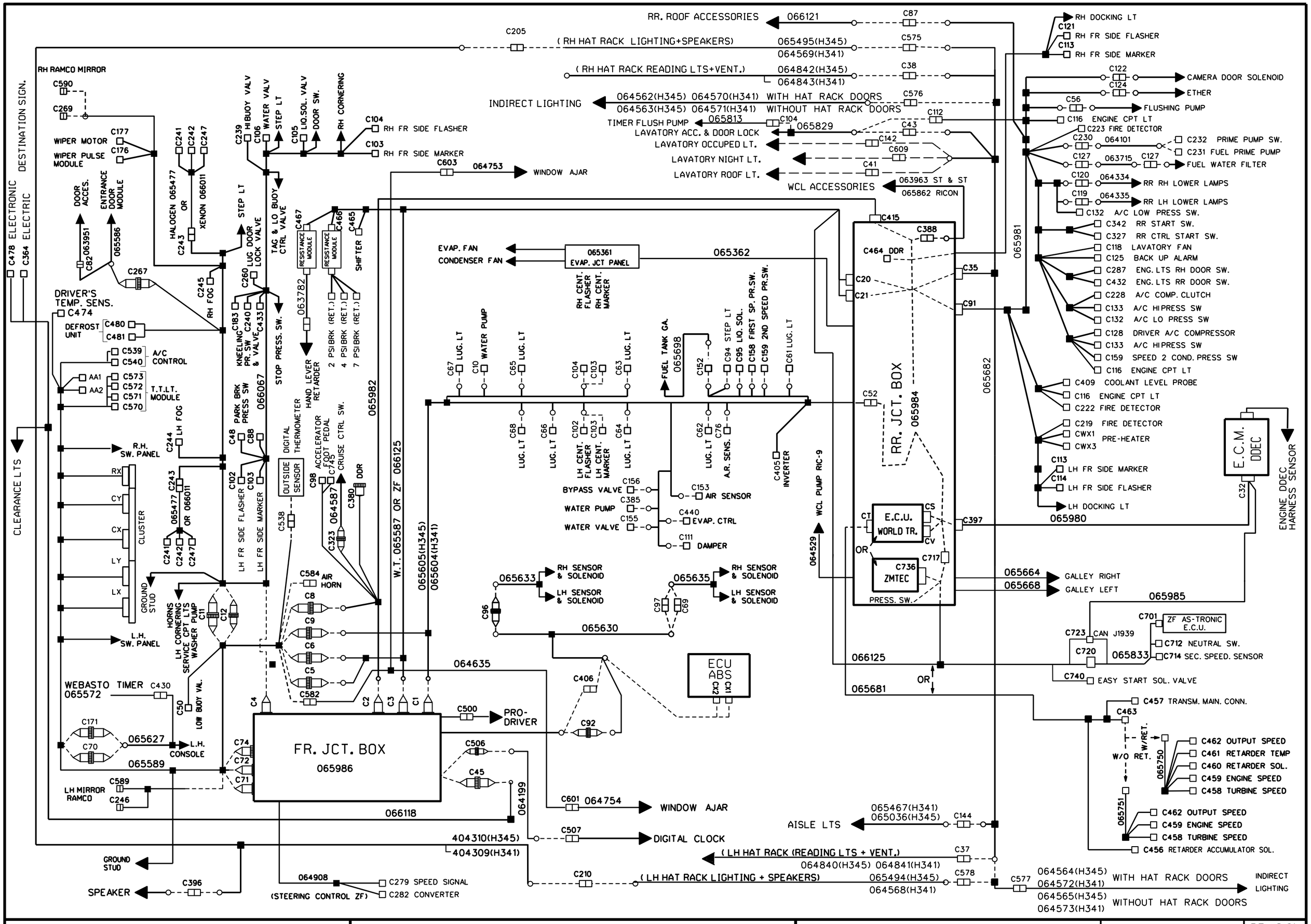

PREVOST	WIRING DIAGRAM	NO: D060976	PAGE: C1	REVISION 10

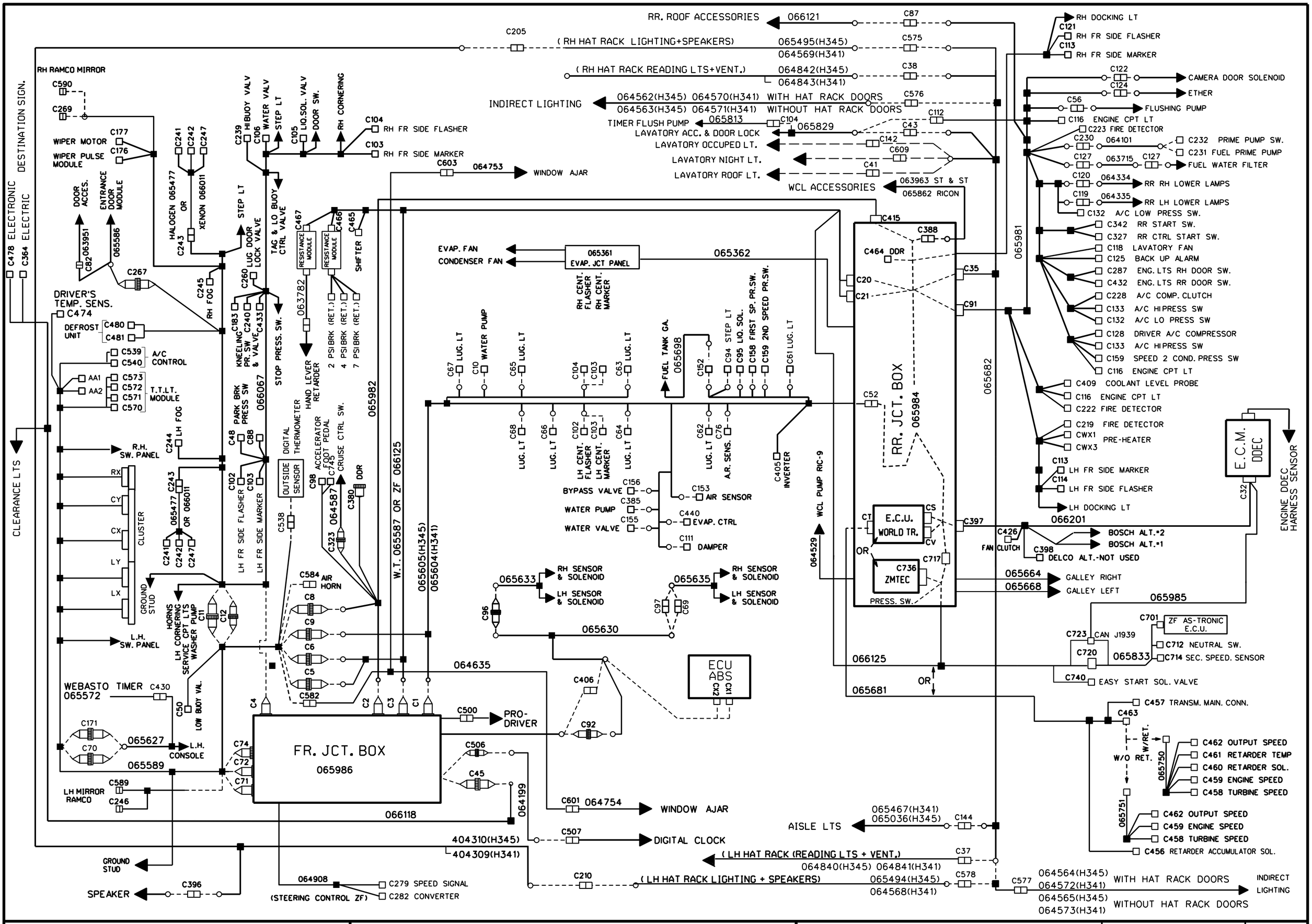

PREVOST	WIRING DIAGRAM	NO: D060976	PAGE: C1	REVISION 11

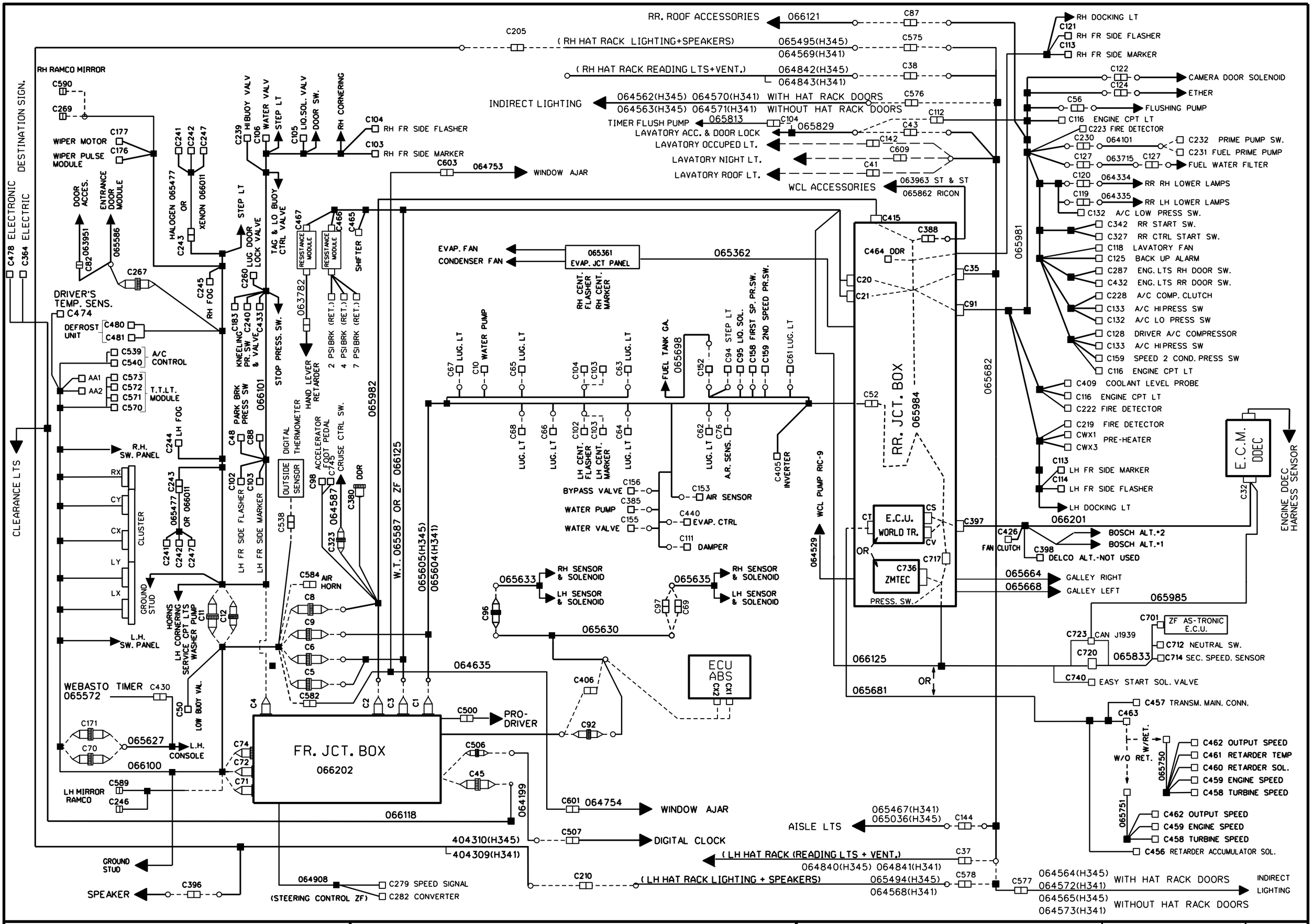

PREVOST	WIRING DIAGRAM	NO: D060976	PAGE: C1	REVISION 12

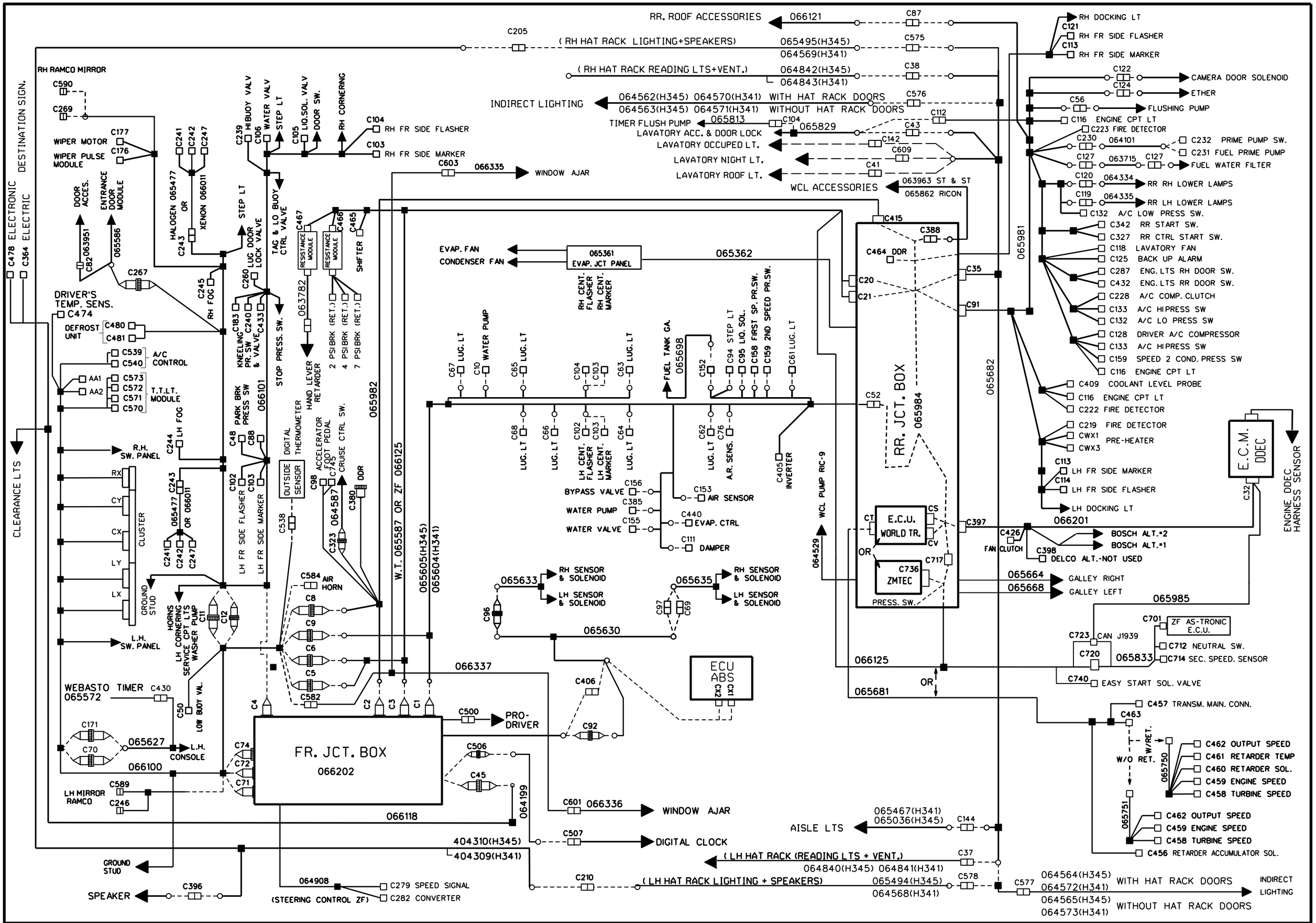

PREVOST	WIRING DIAGRAM	NO: D060976	PAGE: C1	REVISION 15

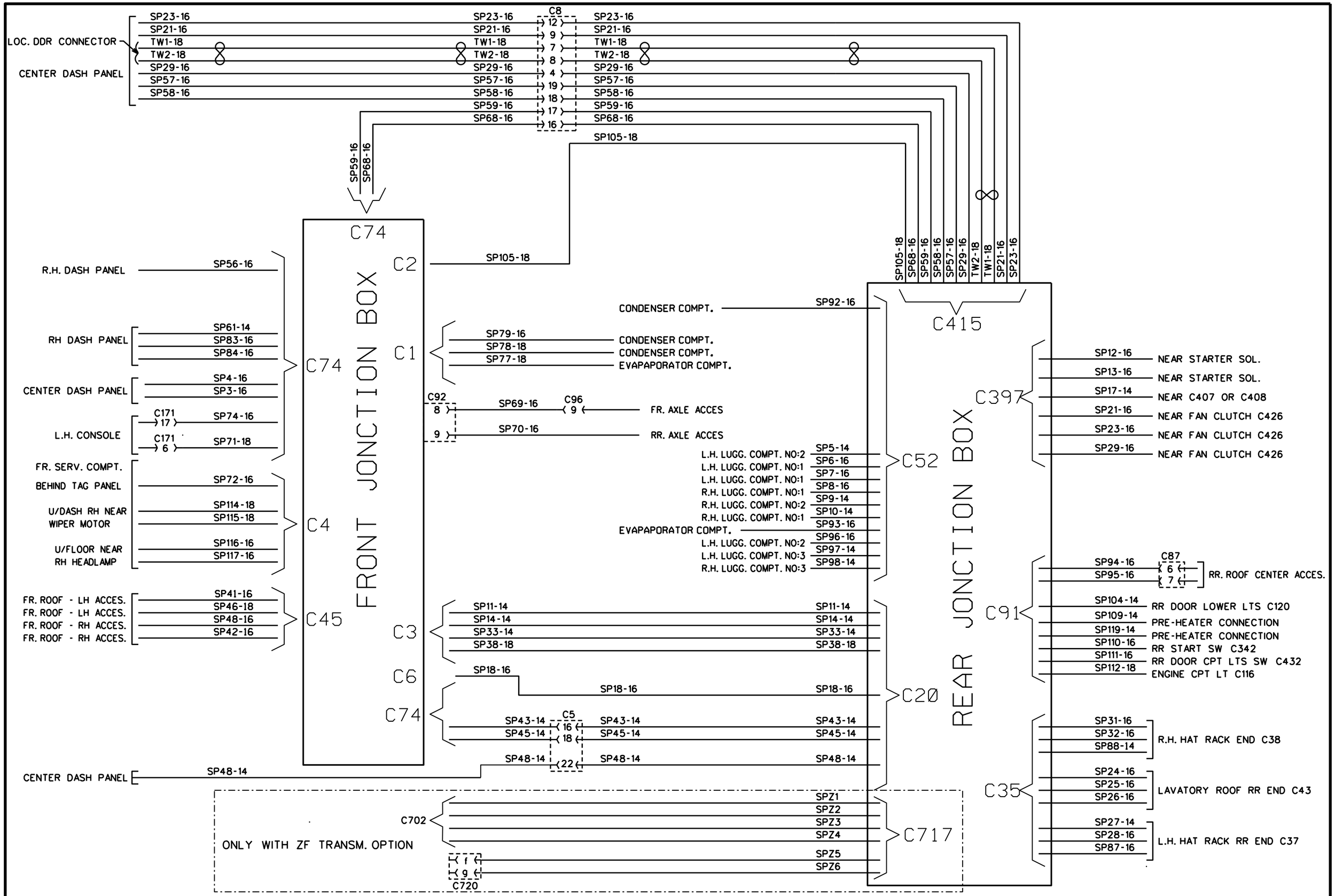

PREVOST	WIRING DIAGRAM	NO: D060976	PAGE: D	REVISION 00

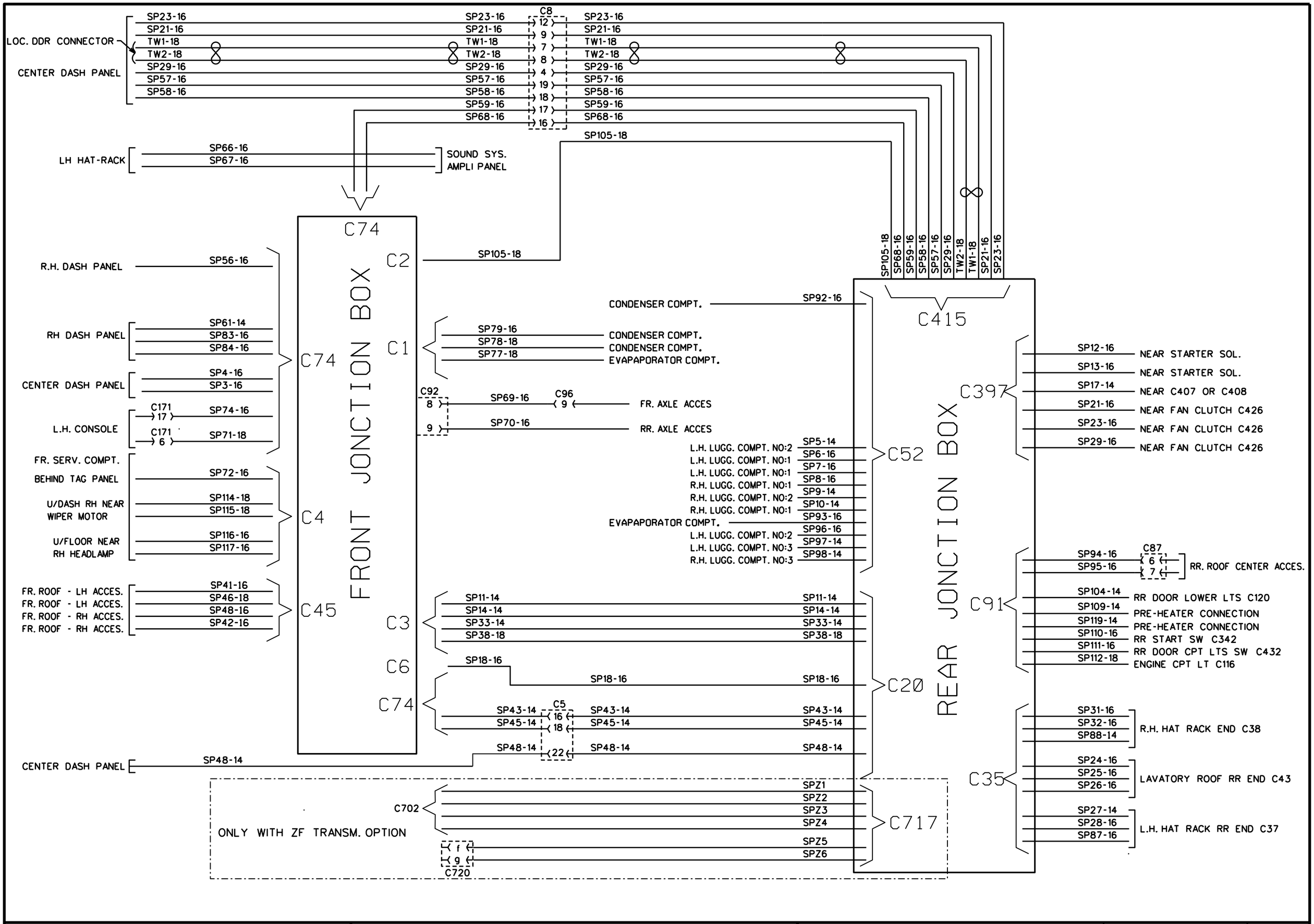

PREVOST	WIRING DIAGRAM	NO: D060976	PAGE: D	REVISION 03

CIRCUIT NUMBER CODE

No.	DESCRIPTION
B A	INTERIOR LTS-110V FLUORESCENT
B B	INTERIOR LTS-110V FLUORESCENT
D 1	SOUND SYSTEM-FR RH SPEAKER
D 2	SOUND SYSTEM-FR RH SPEAKER
D 3	SOUND SYSTEM-FR RH SPEAKER
D 4	SOUND SYSTEM-RR RH SPEAKER
D 5	SOUND SYSTEM-RR RH SPEAKER
D 6	SOUND SYSTEM-RR RH SPEAKER
D 7	SOUND SYSTEM-RR RH SPEAKER
D 8	SOUND SYSTEM-RR RH SPEAKER
D 3 4	SOUND SYSTEM-RR RH SPEAKER
D 6 7	SOUND SYSTEM-RR RH SPEAKER
G 1	SOUND SYSTEM-FR LH SPEAKER
G 2	SOUND SYSTEM-FR LH SPEAKER
G 3	SOUND SYSTEM-FR LH SPEAKER
G 4	SOUND SYSTEM-RR LH SPEAKER
G 5	SOUND SYSTEM-RR LH SPEAKER
G 6	SOUND SYSTEM-RR LH SPEAKER
G 7	SOUND SYSTEM-RR LH SPEAKER
G 8	SOUND SYSTEM-RR LH SPEAKER
G 3 4	SOUND SYSTEM-RR LH SPEAKER
G 6 7	SOUND SYSTEM-RR LH SPEAKER
L 1 A	INTERIOR LTS-110V FLUORESCENT
L 1 B	INTERIOR LTS-110V FLUORESCENT
L 2 A	INTERIOR LTS-110V FLUORESCENT
L 2 B	INTERIOR LTS-110V FLUORESCENT
L 0	110V RECEPTACLE- 110V FLUOR.
L 1	110V RECEPTACLE- 110V FLUOR.
L 2	110V RECEPTACLE- 110V FLUOR.
R A	INTERIOR LTS-110V FLUORESCENT
R B	INTERIOR LTS-110V FLUORESCENT
S H 1	SHIELD CHASSIS GRD
S H 2	SHIELD CHASSIS GRD
S H 3	SHIELD CHASSIS GRD
S H 4	SHIELD CHASSIS GRD
S P 2	SPARE-FJB TO FR SERV CPT
S P 3	SPARE-FJB TO CENTER DASH
S P 4	SPARE-FJB TO CENTER DASH
S P 5	SPARE-RJB TO LUGG CPT #2
S P 6	SPARE-RJB TO LUGG CPT #1
S P 7	SPARE-RJB TO LUGG CPT #1
S P 8	SPARE-RJB TO LUGG CPT #1
S P 9	SPARE-RJB TO LUGG CPT #2
S P 10	SPARE-RJB TO LUGG CPT #1
S P 11	SPARE-FJB TO RJB
S P 12	SPARE-RJB TO ENGINE
S P 13	SPARE-RJB TO ENGINE
S P 14	SPARE-FJB TO RJB
S P 15	SPARE-RJB TO ENGINE
S P 16	SPARE-RJB TO ENGINE

No.	DESCRIPTION
S P 17	SPARE-RJB TO ENGINE
S P 18	SPARE-FJB TO RJB
S P 24	SPARE-RJB TO LAVATORY ROOF
S P 25	SPARE-RJB TO LAVATORY ROOF
S P 26	SPARE-RJB TO LAVATORY ROOF
S P 27	SPARE-RJB TO LH HAT RACK
S P 28	SPARE-RJB TO LH HAT RACK
S P 31	SPARE-RJB TO RH HAT RACK
S P 32	SPARE-RJB TO RH HAT RACK
S P 33	SPARE-FJB TO RJB
S P 38	SPARE-FJB TO RJB
S P 43	SPARE-FJB TO RJB
S P 45	SPARE-FJB TO RJB
S P 46	SPARE-RJB TO LH FR ROOF
S P 48	SPARE-RJB TO DASH CENTER PANEL
S P 56	SPARE-ENGINE TO RH SW PANEL
S P 57	SPARE-DASH CENTER PANEL TO ENG.
S P 58	SPARE-DASH CENTER PANEL TO ENG.
S P 59	SPARE-FJB TO ENGINE
S P 61	SPARE-FJB TO DASH RH PANEL
S P 68	SPARE-FJB TO ENGINE
S P 69	SPARE-FJB TO FR AXLE
S P 70	SPARE-FJB TO FR AXLE
S P 71	SPARE-FJB TO RH SW PANEL
S P 72	SPARE-FJB TO FR SERV CPT
S P 74	SPARE-FJB TO LH CONSOLE
S P 77	SPARE-FJB TO EVAPORATOR CPT
S P 78	SPARE-FJB TO CONDENSER CPT
S P 79	SPARE-FJB TO CONDENSER CPT
S P 87	SPARE-RJB TO LH HAT RACK
S P 88	SPARE-RJB TO RH HAT RACK
S P 92	SPARE-RJB TO CONDENSER CPT
S P 93	SPARE-RJB TO EVAPORATOR CPT
S P 94	SPARE-RJB TO RR ROOF
S P 95	SPARE-RJB TO RR ROOF
S P 96	SPARE-RJB TO LUGG CPT #2
S P 97	SPARE-RJB TO LUGG CPT #3
S P 98	SPARE-RJB TO LUGG CPT #3
S P 104	SPARE-RJB TO ENGINE CPT
S P 105	SPARE-FJB TO ENGINE
S P 106	SPARE-RJB TO BATT. CPT.
S P 107	SPARE-RJB TO BATT. CPT.
S P 108	SPARE-RJB TO BATT. CPT.
S P 109	SPARE-RJB TO ENGINE CPT.
S P 110	SPARE-RJB TO ENGINE CPT.
S P 111	SPARE-RJB TO ENGINE CPT.
S P 112	SPARE-RJB TO ENGINE CPT.
S P 114	SPARE-FJB TO U/DASH WIPER
S P 115	SPARE-FJB TO U/DASH WIPER
S P 116	SPARE-FJB TO U/DASH FLOOR

No.	DESCRIPTION
S P 117	SPARE-FJB TO U/DASH FLOOR
S P 119	SPARE-RJB TO ENGINE CPT.
SPZ 1	SPARE WIRE-ZF TRANSM.
SPZ 2	SPARE WIRE-ZF TRANSM.
SPZ 3	SPARE WIRE-ZF TRANSM.
SPZ 4	SPARE WIRE-ZF TRANSM.
SPZ 5	SPARE WIRE-ZF TRANSM.
SPZ 6	SPARE WIRE-ZF TRANSM.
W C	A/C & HEAT SYST-EVAP CTR SIGN
Y C	INTERIOR LTS-110V FLUORESCENT
Y D	INTERIOR LTS-110V FLUORESCENT
0	BC - BAT. CPT CHASSIS GRD
0	CONDENSER CPT GRD
0	RS - RR JCT BOX RLY GRD
0	GALLEY GRD
0 A	BC - SHIELD GRD
0 A	RS - RR JCT BOX RLY GRD
0 A	FRS - FR ROOF ACCES. GRD
0 A	RS - LUG. CPT ACCES. GRD
0 A	A/C SYSTEM-EVAP. GRD
0 A A	RS - VOLTAGE REGULATOR GRD
0 B 1	EC – RR JCT PANEL GRD
0 B	EC - ENGINE GRD
0 B	FRS - FR ROOF HEAT WIND GRD
0 B	RS - LUG. CPT ACCES. GRD
0 B E	RJB - BAT. EQUAL. BAT GRD
0 C	EC - STARTER MOTOR GRD
0 C	FS - SERV. CPT ACCES. GRD
0 C	BC - FAN EVAP. & CONDENSER GRD
0 C R	24V DISC. SW. RLY GRD SIGNAL
0 C S	24V DISC. SW. RLY GRD SIGNAL
0 C 1	FS - SERV. CPT ACCES. GRD
0 C 2	FS - SERV. CPT ACCES. GRD
0 C 3	FS - SERV. CPT ACCES. GRD
0 C 4	FS - FJB CPT ACCES. GRD
0 D	BC - FAN CONDENSER GRD
0 D	RS - HAT RACK ACCES. LH GRD
0 D	RJB – IGNITION RELAY
0 D F	RS - RR SIDE FLASH & MARK GRD
0 D R	RS - RJB DOCKING LT RESISTORS
0 E	RS - HAT RACK ACCES. LH GRD
0 E A	EATON TRANSMISSION GRD
0 F	RS - HAT RACK ACCES. RH GRD
0 G	RS - HAT RACK ACCES. RH GRD
0 H	RS - LAVATORY ACCES. GRD
0 J	FS - LH CONSOLE SW GRD
0 J	RS - RR ROOF ACCES. GRD
0 K	RS - RR ROOF ACCES. GRD
0 K	RS - RJB A/C JCT PANEL GRD
0 L	FS - FR SERVICE CPT LTS GRD

No.	DESCRIPTION
0 L 1	FS - FR SERVICE CPT LTS GRD
0 L 2	FS - FR SERVICE CPT LTS GRD
0 L 3	FS - FJB GRD
0 L 4	FS - FJB GRD
0 L 5	FS - CIGAR LIGHTER
0 L 6	FS - FRONT SERVICE CPT LTS GRD
0 L	RS - ENGINE CPT ACCES. GRD
0 L	ENTRANCE DOOR (SEDAN) GRD
0 L H	RS - RR END LAMPS LH GRD
0 M	FS - ELECTRICAL MOTOR GRD
0 M 1	FS - ELECTRICAL MOTOR GRD
0 M 3	FS - ELECTRICAL MOTOR GRD
0 M 4	FS - ELECTRICAL MOTOR GRD
0 M 5	FS - ELECTRICAL MOTOR GRD
0 M 6	FS - FJB GRD
0 M 7	FS - ELECTRICAL MOTOR GRD
0 M	RS - ENGINE CPT ACCES. GRD
0 M R	24V DISC. SW. RLY GRD SIGNAL
0 M S	24V DISC. SW. RLY GRD SIGNAL
0 N	RS - ENGINE CPT ACCES. GRD
0 P	RS - ENGINE CPT ACCES. GRD
0 R	FS - SOUND SYS. JCT PANEL GRD
0 R	RS - RJB GRD
0 R	RS - ENGINE CPT ACCES. GRD
0 R E	RADIO &CTRL HEAD CHASSIS GRD
0 R H	RS - RR END LAMPS RH GRD
0 S	12 VOLT RUN - GND RELAY
0 S A	EC-BOSCH ALT. GROUND
0 S 2	SOUND SYSTEM RADIO GRD
0 S 3	SOUND SYSTEM VIDEO GRD
0 S S	SOUNS SYSTEM BATT. GRD
0 T	FS - DASH ACCES. GRD
0 T 1	FS - DASH ACCES. GRD
0 T 2	FS - DASH ACCES. GRD
0 T 3	FS - DASH ACCES. GRD
0 T 4	FS - DASH ACCES. GRD
0 T 5	FS - HVAC DASH MODULE. GRD
O T 6	FS - HVAC DASH MODULE. GRD
0 V	RR JCT BOX CPT GRD STUD
0 VA	BATTERY TO EQUALISER 0V
0 W	FS - WT GND & SHIELD
0 W	RS - RR JCT BOX (WCL) GRD
0 W C	RS - RR JCT BOX GRD (WCL)
0 X	RS - RR JCT BOX GRD
0 Y	ABS FR JCT BOX CPT GRD STUD
0 Y	RR JCT BOX GRD
0 Y 1	ABS SYSTEM - GRD
0 Y 2	ABS SYSTEM - GRD
0 Y 3	ABS SYSTEM - GRD
0 Y 4	ABS SYSTEM - GRD

CIRCUIT NUMBER CODE

No.	DESCRIPTION
0 Y 5	ABS SYSTEM - GRD
0 Y 6	ABS SYSTEM - GRD
0 Z	RR JCT BOX CPT GRD STUD
0 Z 0	RR JCT BOX CPT GRD STUD
0Z 1	ZF TRANSM. GRD
0Z 2	ZF TRANSM. GRD
0 0	FJB & RJB BATT. GRD
0 0 A	FBG - T.T.LT. MODULES BATT. GRD
0 0 Y	FS - ABS MODULLE BATT. GRD
0 0 S S	SOUND SYSTEM BATT. GRD
1	TACHO SYSTEM - RPM SIGNAL +
2 B	A/C & HEAT SYSTEM-COOL SIGN
2 E	A/C & HEAT SYSTEM EVAP CONT
2 F	A/C & HEAT SYSTEM EVAP CONT
4	HOSTESS & PASSENGER CHIME
4 A	HOSTESS & PASSENGER CHIME
4 B	PASSENGER CHIME
4 C	HOSTESS CHIME
5	INTERIOR LTS-AISLE & EMERG. EXIT
5	UPPER WINDSHIELD DEFROSTER
5 D	UPPER WINDSHIELD DEFROSTER
5 E	UPPER WINDSHIELD DEFROSTER
5 N	INTERIOR LTS-EMERGENCY EXIT
5 N C	SPEED SIGNAL LOWER 5MPH
5 N O	SPEED SIGNAL HIGHER 5MPH
6	INTERIOR LTS-AISLE
7 B	ENTRANCE DOOR (SEDAN)
7 D	ENTRANCE DOOR (SEDAN)
7 D A	ENTRANCE DOOR (SEDAN)
9	INTERIOR LTS-ENGINE CPT
9 A	INTERIOR LTS-ENGINE CPT
9 B	INTERIOR LTS-ENGINE CPT
9 E	INTERIOR LTS-FR SERVICE CPT
9 F	INTERIOR LTS-FR SERVICE CPT
1 0	INTERIOR LTS-LUGGAGE CPT
1 0 A	INTERIOR LTS-LUGGAGE CPT
1 0 B	INTERIOR LTS-LUGGAGE CPT
1 0 D	INTERIOR LTS-LUGGAGE CPT
1 0 F	INTERIOR LTS-LUGGAGE CPT
1 0 H	INTERIOR LTS-LUGGAGE CPT
1 0 K	INTERIOR LTS-LUGGAGE CPT
1 0 R	INTERIOR LTS-LUGGAGE DOOR AJAR
1 1	FR DESTINATION SIGN
1 1 A	FR DESTINATION SIGN
1 1 B	FR DESTINATION SIGN
1 1 C	FR DESTINATION SIGN
1 1 D	FR DESTINATION SIGN
1 1 E	FR DESTINATION SIGN
1 1 K	FR DESTINATION SIGN
1 2	12V BAT ELECTRONIC JCT BLOCK

No.	DESCRIPTION
1 2	BAT CPT 12V BATTERY
1 2 A	FR JCT BOX 12V DISC SW
1 2 A	RR JCT BOX 12V DISC SW
1 2 B	12V BAT ELECTRICAL JCT BLOCK
1 2 B	RR JCT BOX 12V DISC SW
1 2 B	FR JCT BOX 12V DISC SW
1 2 B E	BAT. EQUALIZER MONITOR
1 2 C	FR JCT BOX 12V DISC SW
1 2 C	RR JCT BOX 12V HOT WIRE
1 2 C E	RR JCT BOX 12V HOT WIRE
1 2 D	BAT CPT 12V BATTERY
1 2 D A	12V IGNITION DISTRIBUTION
1 2 D T	TTLT MODULE
1 2 E	FR JCT BOX 12V DISC SW
1 2 E	RR JCT BOX 12V DISC SW
1 2 F	BAT CPT 12V FJB & IC
1 2 F	FR JCT BOX 12V DISC SW
1 2 G	FR JCT BOX 12V DISC SW
1 2 H	12 V IGNITION D.T.RUN LIGHT
1 2 J	FR JCT BOX 12V DISC SW
1 2 I	12V IGNITION DISTRIBUTION
1 2 I	RR JCT BOX 12V IGNITION
1 2 K	12 VOLT IGN. TTLT & HVAC MODULE
1 2 I A	12V IGNITION DISTRIBUTION
1 2 I A	FR JCT BOX 12V IGNITION
1 2 I B	FR JCT BOX 12V IGNITION
1 2 I E	ABS-FR JCT BOX 12V IGNITION
1 2 I F	FR JCT BOX 12V IGNITION
1 2 I Z	12 V IGNITION FOR ZF TRANSM.
1 2 L X	CLUSTER (12V HOT WIRE)
1 2 M	ABS-FR JCT BOX 12V DISC. SW.
1 2 P	LH CONSOLE POWER OUTLET
1 2 R	BAT CPT 12V DISC RLY TO RJB
1 2 R	MEMORY BATTERY RADIO
1 2 S	SOUND SYSTEM 12V RADIO
1 2 S 1	SOUND SYSTEM 12V RADIO
1 2 S 1 A	DVD KARAOKE FEEDING
1 2 S 2	SOUND SYSTEM 12V RADIO
1 2 S 2 A	DVD KARAOKE FEEDING
1 2 S B	SOUND SYSTEM 12V FEEDING
1 2 S S	SOUND SYSTEM 12V FEEDING
1 2 V	RR JCT BOX 12V DISC SW
1 2 V A	BATTERY TO EQUALIZER 12V
1 2 V D	12V HOT WIRE DISTRIBUTION
1 2 V F	BAT CPT 12V FJB & IC
1 2 V I	12V IGNITION DISTRIBUTION
1 2 V R	BAT CPT 12V DISC RLY TO RJB
1 2 W	12V BATTERY DDEC III
1 2 W	ENTRANCE DOOR (SEDAN)
1 2 W A	ENTRANCE DOOR (SEDAN)

No.	DESCRIPTION
1 2 W B	ENTRANCE DOOR (SEDAN)
1 2 X	FR JCT BOX 12V DISC SW
1 2 X 2	FR JCT BOX 12V DISC SW
1 2 Y	FR JCT BOX 12V DISC SW
1 3 A	ALARM & SIGNAL-LO AIR PRIM.
1 3 B	ALARM & SIGNAL-LO AIR SEC.
1 4	LAVATORY-FLUSHING PUMP
1 4 A	LAVATORY-FLUSHING PUMP
1 4 P	LAVATORY-FLUSHING PUMP
1 5	EXTERIOR LTS-MULTI FUNC LEVEL
1 5 A	WIPER & WASHER UPPER WINDSHIELD
1 6	SPEED - SIGNAL +
1 6 A	SPEED - SIGNAL +
1 6 T	SPEED - SIGNAL +
1 7	EXTERIOR LTS-FLASHER UNIT
1 7 A	EXTERIOR LTS-FLASHER UNIT
1 9	DIFFERENTIAL OIL TEMP
2 0	SPEED - SIGNAL -
2 0 T	SPEED - SIGNAL -
2 0 W	SPEED - SIGNAL -
2 1	EXTERIOR LTS-DIRECTIONNAL LH
2 1 A	EXTERIOR LTS-DIRECTIONNAL LH
2 1 B	EXTERIOR LTS-HAZARD
2 1 C	EXTERIOR LTS-CORNERING LH
2 1 H	EXTERIOR LTS-DIRECTIONNAL LH
2 1 K	EXTERIOR LTS-CORNERING
2 1 N	EXTERIOR LTS-CORNERING LH
2 1 P	EXTERIOR LTS-CORNERING LH
2 3	EXTERIOR LTS-DIRECTIONNAL RH
2 3	EXTERIOR LTS-DIRECTIONNAL RH
2 3 A	EXTERIOR LTS-DIRECTIONNAL RH
2 3 B	EXTERIOR LTS-DIRECTIONNAL RH
2 3 C	EXTERIOR LTS-CORNERING RH
2 3 N	EXTERIOR LTS-CORNERING RH
2 3 P	EXTERIOR LTS-CORNERING RH
2 4	BAT CPT 24V BATTERY
2 4	FR JCT BOX 24V DISC SW
2 4 A	BOOSTER BLOCK 24V DISC SW
2 4 A	FR JCT BOX 24V DISC SW
2 4 A	RR JCT BOX 24V DISC SW
2 4 B	24V STARTER RLY FEEDING
2 4 B	FR JCT BOX 24V DISC SW
2 4 B A	RR JCT BOX 24V DISC SW
2 4 B C	24 VOLT BATT. CHARGER
2 4 B E	RJB CPT-BAT EQ MONITOR HOT WIRE
2 4 C	FR JCT BOX 24V DISC SW
2 4 C	RR JCT BOX 24V DISC SW
2 4 D	BAT CPT 24V HOT WIRE
2 4 D	FR JCT BOX 24V HOT WIRE
2 4 D	RR JCT BOX 24V HOT WIRE

No.	DESCRIPTION
2 4 D A	A/C JCT BOX 24V HOT WIRE
2 4 D Z	24 V HOT WIRE FOR ZF TRANSM.
2 4 E	BAT CPT 24V DISC SW
2 4 E	FR JCT BOX 24V DISC SW
2 4 E	RR JCT BOX 24V DISC SW
2 4 F	FR JCT BOX 24V DISC SW
2 4 F	RR JCT BOX 24V DISC SW
2 4 G	FR JCT BOX 24V DISC SW
2 4 G	RR JCT BOX 24V DISC SW
2 4 H	FR JCT BOX 24V DISC SW
2 4 H	RR JCT BOX 24V DISC SW
2 4 I	FR JCT BOX 24V IGNITION
2 4 I	RR JCT BOX 24V IGNITION
2 4 I A	FR JCT BOX 24V IGNITION
2 4 I B	FR JCT BOX 24V IGNITION
2 4 I B	RR JCT BOX 24V IGNITION
2 4 I C	FR JCT BOX 24V IGNITION
2 4 I C	RR JCT BOX 24V IGNITION
2 4 I F	FJB 24VOLT IGNITION
2 4 P	FR JCT BOX 24V DISC SW
2 4 S	24V DISC SW RLY SIGNAL
2 4 S 1	SOUND SYSTEM 24V AMPLIFIER
2 4 S 2	SOUND SYSTEM 24V AMPLIFIER
2 4 S 3	SOUND SYSTEM 24V VIDEO
2 4 S 4	SOUND SYSTEM 24V VIDEO
2 4 S B	SOUND SYSTEM 24V FEEDING
2 4 S S	SOUND SYSTEM 24V FEEDING
2 4 R	24 VOLTS FRONT CAMERA SW.
2 4 V 2	RR JCT BOX 24V DISC SW
2 4 V 3	RR JCT BOX 24V DISC SW
2 4 V 4	RR JCT BOX 24V DISC SW
2 4 V 5	RR JCT BOX 24V DISC SW
2 4 V D	24V HOT WIRE RR JCT BOX
2 4 V F	BAT CPT 24V SW TO FJB & IC
2 4 V A	BATTERY TO EQUALIZER 24V
2 4 V I	RR JCT BOX 24V IGNITION
2 4 V R	BAT CPT 24V DISC SW TO RJB
2 4 W	RR JCT BOX 24V DISC SW (WCL)
2 4 W C	BATT.CPT TO HYD. PUMP (WCL)
2 4 W L	24V BATTERY-HYD. PUMP (WCL)
2 4 Z Z	24 VOLT - ZF TRANSM. POWER
2 5	24 VOLT ALT.SIGNAL MODULE
2 5 A 1	PRE-EXITATION ALT. BOSCH #1
2 5 A 2	PRE-EXITATION ALT. BOSCH #2
2 5 A	T.T. LT. ALTERNATOR #1
2 5 B	12 VOLTS IGN. ALT. SIGNAL MODULE
2 5 D	12 V. ENGINE RUN / HVAC SYSTEM
2 5 E	USE ON VIP ONLY
2 5 F	12 VOLT IGN. DISTRIBUTION
2 5 H	24 VOLT IGN. ALT. BOSCH

CIRCUIT NUMBER CODE

No.	DESCRIPTION
2 5 K	T.T. LT. ALTERNATOR #2
2 6 A	CIGAR LIGHTER
2 6	DRIVER'S WINDOW LIFTER
2 6 B	DRIVER'S WINDOW LIFTER
2 6 C	DRIVER'S WINDOW LIFTER
2 7	LAVATORY-EMERGENCY SONALERT
2 8 A	A/C & HEAT SYSTEM-HI PRESSURE
2 8 H	TTLT HI LO PRESS
2 8 T	TTLT HI LO PRESS
2 9	A/C & HEAT SYSTEM-DRIVER'S HTR
2 9 A	A/C & HEAT SYSTEM-DRIVER'S HTR
2 9 B	A/C & HEAT SYSTEM-DRIVER'S HTR
2 9 H	HVAC DASH MODULE
3 0 A	GALLEY
3 1 A	A/C & HEAT SYSTEM-UNLOADER
3 1 B	A/C & HEAT SYSTEM-UNLOADER
3 1 B	WIPER & WASHER SYSTEM
3 1 C	WIPER & WASHER SYSTEM
3 1 D	WIPER & WASHER SYSTEM
3 1 E	WIPER & WASHER SYSTEM
3 1 J	WIPER & WASHER SYSTEM
3 1 X	WIPER & WASHER SYSTEM
3 2	EXTERIOR LTS-BACK-UP
3 2 B	EXTERIOR LTS-BACK-UP
3 2 C	BACK-UP PWR & SIGNAL
3 2 D	BACK-UP ALARM
3 5	ENTRANCE DOOR (SEDAN)
3 5 B	ENTRANCE DOOR (SEDAN)
3 5 B B	ENTRANCE DOOR (SEDAN)
3 5 D	ENTRANCE DOOR (SEDAN)
3 6	JACOB BRAKE SYSREM
3 6 A	JACOB BRAKE SYSREM
3 8	INTERIOR LTS-24V FLUORESCENT
3 8 A	INTERIOR LTS-24V FLUORESCENT
3 8 C	INTERIOR LTS-24V FLUORESCENT
3 8 D	INTERIOR LTS-24V FLUORESCENT
3 9	INTERIOR LTS-24V LH CONSOLE SW
3 9 A	INTERIOR LTS-DRIVER"S LTS
3 9 P	READING LIGHTS
4 1	A/C & HEAT SYSTEM-COND FAN MOT
4 1 A	A/C & HEAT SYSTEM-COND FAN MOT
4 1 B	A/C & HEAT SYSTEM-COND FAN MOT
4 2	A/C & HEAT SYSTEM-COND FAN MOT
4 2 A	A/C & HEAT SYSTEM-COND FAN MOT
4 3	HAT RACK FAN
4 3 A	HAT RACK FAN
4 3 B	HAT RACK FAN
4 3 D	HAT RACK FAN
4 3 E	HAT RACK FAN
4 3 F	HAT RACK FAN

No.	DESCRIPTION
4 3 G	HAT RACK FAN
4 4	EXTERIOR LTS-FOG
4 4 A	EXTERIOR LTS-FOG
4 4 B	EXTERIOR LTS-FOG
4 4 C	EXTERIOR LTS-FOG & HAZARD
4 5 A	A/C & HEAT SYSTEM-FULL AIR
4 5 B	A/C & HEAT SYSTEM-WATER PUMP
4 5 C	A/C & HEAT SYSTEM-WATER VALVE
4 5 D	A/C & HEAT SYSTEM-WATER VALVE
4 5 E	A/C & HEAT SYSTEM-HEAT 1 SIGN
4 5 G	A/C & HEAT SYSTEM-DRIVER'S HTR
4 5 H	A/C & HEAT SYSTEM-DRIVER'S HTR
4 5 W	A/C & HEAT SYSTEM-COND. DOOR AJAR
4 6	EXTERIOR LTS-MARKER
4 6 A	EXTERIOR LTS-MARKER
4 6 B	EXTERIOR LTS-MARKER
4 6 B	EXTERIOR LTS-MARKER
4 6 C	EXTERIOR LTS-MARKER
4 7	A/C & HEAT SYSTEM-DRIVER'S HTR
4 8	ENTRANCE DOOR (SEDAN)
4 8 A	ENTRANCE DOOR (SEDAN)
4 9	ENTRANCE DOOR (SEDAN)
4 9 A	ENTRANCE DOOR (SEDAN)
5 2	ALARM & SIGNAL-ELEC. HORN
5 2 A	ALARM & SIGNAL-ELEC. HORN
5 2 B	ALARM & SIGNAL- AIR HORN
5 2 C	ALARM & SIGNAL- AIR HORN
5 3	ALARM & SIGNAL-ELEC. HORN
5 3 A	WIPER & WASHER SYSTEM
5 3 B	WIPER & WASHER SYSTEM
5 3 C	WIPER & WASHER SYSTEM
5 3 E	WIPER & WASHER SYSTEM
5 3 J	WIPER & WASHER SYSTEM
5 5	EXTERIOR LTS-HI BEAM
5 7	EXTERIOR LTS-HI BEAM
5 7 A	A/C & HEAT SYSTEM-WATER PUMP
5 7 A	EXTERIOR LTS-HI BEAM
5 7 B	A/C & HEAT SYSTEM-WATER PUMP
5 7 C	PRE-HEAT WATER HEATER
5 8	EXTERIOR LTS-LO BEAM
5 8 A	EXTERIOR LTS-LO BEAM
5 8 B	EXTERIOR LTS-LO BEAM
5 8 E	EXTERIOR LTS-LO BEAM
5 9 A	JACOB BRAKE SYSTEM
6 1	EXTERIOR LTS-24V FEED SW
6 1 A	EXTERIOR LTS-HEAD SIGNAL
6 2	LAVATORY-OCCUPIED LT
6 2 A	LAVATORY-FLUOR LT
6 2 B	LAVATORY-FLUOR LT

No.	DESCRIPTION
6 2 E	LAVATORY-OCCUP & FLUOR LT
6 3	EXTERIOR LTS-CLEARANCE
6 3 A	EXTERIOR LTS-CLEARANCE
6 3 B	EXTERIOR LTS-CLEARANCE
6 3 C	EXTERIOR LTS-MARKER SIGNAL
6 3 D	EXTERIOR LTS-MARKER & TAIL
6 3 E	EXTERIOR LTS-CLEARANCE
6 3 F	EXTERIOR LTS-MARKER BLINKER
6 3 H	EXTERIOR LTS-TAIL
6 4	DRIVERS FAN
6 4 B	DRIVERS FAN
6 4 C	DRIVERS FAN
6 5	FOOT DAMPER MOTOR
6 5 A	FOOT DAMPER MOTOR
6 5 D	DRIVER REC. DAMPER
6 6	O_PASS. ON/OFF
6 7	24 VOLT RUN DISTRIBUTION
6 7 A	A/C & HEAT SYSTEM
6 7 C	HEATING WINDSHIELD
6 7 K	A/C & HEAT SYSTEM-COND FAN CTR
6 7 L	A/C & HEAT SYSTEM-COND FAN CTR
6 7 X	A/C & HEAT SYSTEM
6 8	DASH & DEFROST DAMPER MOTOR
6 8 A	DASH & DEFROST DAMPER MOTOR
7 0	INTERIOR LTS-HAT RACK & RR RUN.
7 2	SUN VISOR-FEEDING
7 2 A	SUN VISOR-RH
7 2 B	SUN VISOR-RH
7 2 C	SUN VISOR-LH
7 2 D	SUN VISOR-LH
7 3	LAVATORY-FEEDING
7 4	INTERIOR LTS-READING RH
7 4 A	INTERIOR LTS-READING RH
7 4 D	INTERIOR LTS-READING SIGNAL
7 5	INTERIOR LTS-READING LH
7 5 A	INTERIOR LTS-READING LH
7 6	FUEL TANK GAUGE
7 6 B	LOW FUEL LT & ETHER COLD START
7 6 C	LOW FUEL LT
7 6 P	FUEL PRIME PUMP
7 6 M	FUEL PRIME PUMP
7 7 B	A/C & HEAT SYSTEM-COMPRESSOR
7 7 C	A/C & HEAT SYSTEM-COMPRESSOR
7 7 H	A/C & HEAT SYSTEM-COMPRESSOR
8 1	EXTERIOR LTS-STOP SW
8 2	EXTERIOR LTS-STOP SIGNAL
8 2 A	EXTERIOR LTS-STOP SIGNAL
8 2 B	EXTERIOR LTS-STOP LTS
8 2 K	EXTERIOR LTS-STOP PARK BRK
8 2 L	EXTERIOR LTS-LH STOP

No.	DESCRIPTION
8 2 R	EXTERIOR LTS-LH STOP
8 3	ENGINE CTR-KEY SW ACCES SIGN
8 4	ENGINE CTR-KEY SW ACCES SIGN
8 5	ENGINE CTR-KEY SWIGNITION SIGN
8 5	24V IGNITION SIGNAL
8 5 A	24V IGN DASH INSTRUMENTATION
8 5 B	ENGINE CTR-24V IGNITION
8 5 C	PARKING BRAKE SWITCH
8 5 E	STOP LIGHT RLY
8 5 F	ENGINE CTR-ENGINE CTR SW IGN
8 5 F	LO AIR SONALERT
8 5 G	RADIATOR FAN CLUTCH
8 5 X	12V IGN ABS
8 5 Y	ABS SYSTEM
8 6	ENGINE CTR-STARTER SOL SIGN
8 6 A	ENGINE CTR-STARTER SOL SIGN
8 6 F	ENGINE CTR-STARTER TTLT SIGN
8 6 T	ENGINE CTR-STARTER TTLT SIGN
8 8	ENGINE CTR-RR START SIGNAL
8 9	ENGINE CTR-RR START SIGNAL
9 0 B	A/C & HEAT SYSTEM-COND FAN MOT
9 0 B	ENGINE CTR-MAST KEY SW FEED
9 0 C	A/C & HEAT SYSTEM-COND FAN MOT
9 0 F	CHARG SYST-VOLTAGE REGUL. "B"
9 0 H	A/C & HEAT SYSTEM-EVAP FAN MOT
9 1	PARKING BRAKE SW SIGNAL
9 1 A	DDEC-FAST IDLE SIGNAL
9 1 S	SONALERT PARKING BRAKE
9 1 W	PARK, BRAKE SW SIGN (WCL)
9 2	BATTERY EQUALIZER-CHECK BALANCE
9 3	BATTERY EQUALIZER-CHECK LO/HI
9 5 A	ENGINE BRAKE & RETARDER SYSTEM
9 7	TACHOMETER (-)
1 0 0	INTERIOR LTS-GENERAL
1 0 0 A	INTERIOR LTS-GENERAL
1 0 0 B	INTERIOR LTS-GENERAL
1 0 1	24V STARTER SOL FEEDING
1 0 1	WORLD TRANSM-LO SIGN SOL. LO
1 0 2	WORLD TRANSM-SOL. SUPPLY
1 0 2 A	24V STARTER TO BOSCH ALTERNATOR
1 0 3	LOW BUOY
1 0 4	WORLD TRANSM-SOL. FORWARD
1 0 5	WORLD TRANSM-RETARDER & SUMP
1 0 5 W	WORLD TRANSM-RETARDER & SUMP
1 0 6	WORLD TRANSM-OIL LEVEL HI
1 0 7	WORLD TRANSM-LOCKUP SOL. HI
1 0 8	WORLD TRANSM-REM. PWR WAKE UP
1 0 9	WORLD TRANSM-RET. SOL. LO
1 1 0	ALARM & SIGNAL-WATER TEMP
1 1 0	WORLD TRANSM-LOCKUP SOL. LO

CIRCUIT NUMBER CODE

No.	DESCRIPTION
111	WORLD TRANSM-SOL. C6
112	WORLD TRANSM-SPARE OUTPUT (+)
113	ALARM & SIGNAL-OIL PRESS
113	WORLD TRANSM-REVERSE WARNING
113W	WORLD TR.-REVERSE WARNING
113Z	ZF TRANSM.- REVERSE SIGNAL
114	INTERIOR LTS-DASH LT REGUL.
114	WORLD TRANSM-SPARE OUTPUT (-)
114A	INTERIOR LTS-DASH LT
114B	INTERIOR LTS-DASH LT REGUL.
114D	INTERIOR LTS-DASH LT REGUL.
114E	INTERIOR LTS-DASH LT REGUL.
115	ALARM & SIGNAL-TAG PRESS
115	DDEC III-COOLANT LEVEL
115	WORLD TRANSM-DO NOT SHIFT SIGN
115C	DDEC III-COOLANT LEVEL
115W	WORLD TRANSM-DO NOT SHIFT SIGN
115W	ZF TRANSM. - CHECK TRANSM. TTLT
116	WORLD TRANSM-LO SIGNAL SOL. HI
116B	A/C & HEAT SYSTEM-DRIVER'S HTR
117	WORLD TRANSM-SPARE INPUT (-)
117A	ALARM & SIGNAL-TRANSM OIL TEMP
117A	ALARM & SIGNAL-TRANSM OIL TEMP
118	WORLD TRANSM-SPARE INPUT (+)
119	WORLD TRANSM-ENG BRK INPUT (+)
120	WORLD TRANSM-SOL. C1
121	WORLD TRANSM-SOL. GRD 2
122	A/C & HEAT SYSTEM-DRIVER'S HTR
122	A/C & HEAT SYSTEM-FRESH AIR
122	WORLD TRANSM-SOL. GRD 4
122A	A/C & HEAT SYSTEM-FRESH AIR
123	WORLD TRANSM-NEUTRAL START
123A	ALARM & SIGNAL-FIRE DETECTOR
123B	ALARM & SIGNAL-FIRE DETECTOR
124	WORLD TRANSM-THROTTLE (HI)
125	WORLD TRANSM-RET. INDICATOR
125	GALLEY LAMP
125T	GALLEY LAMP
125W	WORLD TRANSM-RET. INDICATOR
126	KNEELING SYSTEM
126A	KNEELING SYSTEM
126B	KNEELING SYSTEM
126C	KNEELING SYSTEM
126D	KNEELING SYSTEM
126E	KNEELING SYSTEM
126F	KNEELING SYSTEM
126G	KNEELING SYSTEM
126H	KNEELING SYSTEM
126K	KNEELING SYSTEM
126P	KNEELING SYSTEM

No.	DESCRIPTION
126R	KNEELING SYSTEM
126W	5 MPH N.C. SIGNAL (WCL)
126S	KNEELING SYSTEM
126T	KNEELING SYSTEM
127	WORLD TRANSM-LUBE PRESS SW.
127	WORLD TRANSM-RETARDER FEED SOL.
127	POWER- PRE-HEAT WATER HEATER
127A	PRE-HEAT WATER HEATER
128A	PRE-HEAT WATER HEATER
128B	PRE-HEAT - BURNER ON SIGNAL
128	WORLD TRANSM-SOL. C2
129	POWER- PRE-HEAT WATER HEATER
129B	POWER- PRE-HEAT WATER HEATER
129	WORLD TRANSM-SOL. C5
130	A/C & HEAT SYSTEM-EVAP FAN MOTOR
130	WORLD TRANSM-SOL. GRD 3
131	WORLD TRANSM-SOL. C4
132	WORLD TRANSM-ENG BRK OUTPUT (-)
132W	WORLD TRANSM-ENG BRK OUTPUT (-)
133	GALLEY-HEAT CONTAINERS
133A	GALLEY-HEAT CONTAINERS
133B	GALLEY-HEAT CONTAINERS
133C	GALLEY-HEAT CONTAINERS
133	WORLD TRANSM-RET. ACTUATOR HI
134	GALLEY-HEAT CONTAINERS
134A	GALLEY-HEAT CONTAINERS
134	WORLD TRANSM-RET. APPLY SOL. HI
135	A/C & HEAT SYSTEM-AIR SENSOR
135A	A/C & HEAT SYSTEM-AIR SENSOR
135	WORLD TRANSM-ANALOG GRD
135D	WORLD TRANSM-RETARDER RES MOD
135C	WORLD TRANSM-RETARDER TEMP
136	GALLEY-ACCESSORIES
136	WORLD TRANSM-ECU POWER
136V	WORLD TRANSM-12V BATTERY
136W	WORLD TRANSM-12V BATTERY
136X	WORLD TRANSM-12V BATTERY
137	WORLD TRANSM-RETARDER
137A	MIRROR (SPARTAN & RAMCO)
137B	RR VIEW MIRROR (SPARTAN)
137C	RR VIEW MIRROR (SPARTAN)
137D	RR VIEW MIRROR (SPARTAN)
137E	RR VIEW MIRROR (SPARTAN)
137G	RR VIEW MIRROR (SPARTAN)
138	ABS SYSTEM
138	WORLD TRANSM-RETARDER TEMP
138A	ABS SYSTEM
139	ABS SYSTEM
139	WORLD TRANSM-OUTPUT SPEED HI
140	ABS SYSTEM

No.	DESCRIPTION
140	WORLD TRANSM-OUTPUT SPEED LO
141	ABS SYSTEM
141	WORLD TRANSM-ENGINE SPEED HI
142	ABS SYSTEM
142	WORLD TRANSM-SERIAL COM. A
143	ABS SYSTEM
143	WORLD TRANSM-ECU BATTERY GRD
143A	ABS SYSTEM
143W	WORLD TRANSM-BATTERY GRD
144	ABS SYSTEM
144	WORLD TRANSM-ECU CHASSIS GRD
144A	ABS SYSTEM
145	ABS SYSTEM
146	ABS SYSTEM
146A	TRANSMISSION-12V IGNITION
146	WORLD TRANSM-IGNITION SENSE
146W	WORLD TRANSM-12V IGNITION
146X	WORLD TRANSM-12V IGNITION
147	ABS SYSTEM
147	WORLD TRANSM-OIL TEMP
147A	ETHER COLD START & D.R.L.
147C	ETHER COLD START
148	ABS SYSTEM
148	WORLD TRANSM-OUTPUT SPEED LO
149	ABS SYSTEM
149	WORLD TRANSM-TURBINE SPEED HI
149A	ABS SYSTEM
150	DDEC III-ECM BATTERY GRD
150	WORLD TRANSM-ENGINE SPEED LO
150A	DDEC III-ECM BATTERY GRD
151	ABS SYSTEM
151	DDEC III-ECM BATTERY GRD
151	WORLD TRANSM-SERIAL COM. B
152	ABS SYSTEM
153	WORLD TRANSM-SPARE INPUT (-)
154	ABS SYSTEM
154	WORLD TRANSM-ABS RET. INPUT
155	WORLD TRANSM-SPARE INPUT (-)
156	WORLD TRANSM-THROTTLE POS.
156A	ABS SYSTEM
157	WORLD TRANSM-SPEEDO SIGNAL
157B	ABS SYSTEM
157D	A.T.C. SYSTEM
157E	A.T.C. SYSTEM
157F	A.T.C. SYSTEM
158	WORLD TRANSM-DIMMER
160	ALARM & SIGNAL-TAG PRESS SW
160	WORLD TRANSM-SER. INTERFACE (-)
161	WORLD TRANSM-SIGNAL GRD
161B	WORLD TRANSM-SIGNAL GRD

No.	DESCRIPTION
162	WORLD TRANSM-PRESS. SW C3
163	WORLD TRANSM-RETARDER ENABLE
164	WORLD TRANSM-RET. ACTUATOR SIGN
165	A/C & HEAT SYSTEM-TRANSMITER
165	WORLD TRANSM-OIL LEVEL SIGNAL
166B	A/C & HEAT SYSTEM-EVAP. MOD.
167	W. TR.-OUT SPEED INTERLOCK
167Z	ZF- OUT SPEED INTERLOCK
168	A/C & HEAT SYSTEM-HUMIDISTAT
168	WORLD TRANSM-SER. INTERFACE (+)
168A	A/C & HEAT SYSTEM-HUMIDISTAT
170	LUGGAGE DOOR LOCK
170C	LUGGAGE DOOR LOCK
170E	LUGGAGE DOOR LOCK
170H	LUGGAGE DOOR LOCK
181A	THERMOMETER INSIDE SENSOR
181B	THERMOMETER INSIDE SENSOR
181C	THERMOMETER OUTSIDE SENSOR
181D	THERMOMETER OUTSIDE SENSOR
197	FUEL WATER FILTER
197A	FUEL WATER FILTER
197B	FUEL WATER FILTER
198	FILTER FUEL HEATER
199	AIR FILTER RESTRICTION SENDER
201	WORLD TRANSM-SPARE
202	WORLD TRANSM-SPARE
203	WORLD TRANSM-SPARE
204	WORLD TRANSM-SPARE
205	WORLD TRANSM-SPARE
206	WORLD TRANSM-SPARE
214	WORLD TRANSM-BACK UP SIGNAL
225	LAVATORY FAN
225A	LAVATORY FAN
231	NEUTRAL SIGNAL GRD
231A	NEUTRAL COIL RELAY FEED SIGNAL
231W	NEUTRAL SIGNAL GRD (WCL)
231Z	ZF NEUTRAL SIGNAL GRD
240	DDEC III-ECM 12V FEEDING
241	DDEC III-ECM 12V FEEDING
251A	DDEC III - DATA LOGGER 12 H.W.
251	DDEC III - PRODRIVER 12V H.W.
253	GALLEY-MICROWAVE
254	GALLEY-12V FRIGO NORCOLD
254A	GALLEY-FRIGO
255	GALLEY-COFEEMAKER
255A	GALLEY-COFEEMAKER
257	WINDSHIELD HEATED
257A	WINDSHIELD HEATED
257B	WINDSHIELD HEATED
257C	WINDSHIELD HEATED

CIRCUIT NUMBER CODE

No.	DESCRIPTION
257D	WINDSHIELD HEATED SPARE
257E	WINDSHIELD HEATED SPARE
258	WINDSHIELD HEATED
258A	WINDSHIELD HEATED
259	WINDSHIELD HEATED
259A	WINDSHIELD HEATED
260	WINDOW AJAR
290	FAN CLUTCH RADIATOR
290	FAN CLUTCH RADIATOR
291	FAN CLUTCH RADIATOR SPD 1
292	FAN CLUTCH RADIATOR SPD 2
300	DOOR AJAR MAGN.SW. (WCL)
300A	POWER SYSTEM SW. (WCL)
300B	DOOR AJAR ALARM (WCL)
301	POWER SYSTEM SW. (WCL)
302	DOOR AJAR T.T.LT. (WCL)
302A	DOOR AJAR ALARM SIGN.(WCL)
302B	DOOR AJAR MAGN.SW. (WCL)
303	REMOTE WALL SW. DWN (WCL)
304	REMOTE WALL SW. UP (WCL)
305	PARK. BRAKE SOL. VALVE (WCL)
305A	PARK. BRAKE SAFETY SW. (WCL)
306	CONTROL SYSTEM (WCL RICON)
307	CONTROL SYSTEM (WCL RICON)
308	CONTROL SYSTEM (WCL RICON)
309	CONTROL SYSTEM (WCL RICON)
310	EATON TRANSMISSION
311	EATON TRANSMISSION
312	EATON TRANSMISSION
313	EATON TRANSMISSION
314	EATON TRANSMISSION
315	EATON TRANSMISSIOM
316	EATON TRANSMISSION - EPL
317	EATON TRANSMISSION
318	EATON TRANSMISSION
319	EATON TRANSMISSION
320	EATON TRANSMISSION
321	EATON TRANSMISSION
322	EATON TRANSMISSIION
323	EATON TRANSMISSION
324	EATON TRANSMISSION
325	EATON TRANSMISSION
326	EATON TRANSMISSION
327	EATON TRANSMISSION
328	EATON TRANSMISSION
329	EATON TRANSMISSION
330	EATON TRANSMISSION - EPL
331	EATON TRANSMISSION - EPL
332	EATON TRANSMISSION
333	EATON TRANSMISSION - 12V BATTERY

No.	DESCRIPTION
334	EATON GENERATION 2
416	DDEV IV- SENSOR SUPPLY 5VDC
417	DDEC III-LIMIT SPEED GOVERNOR
419	DDEC III-CHECK ENGINE LIGHT
439	DDEC III-12V IGNITION
440	DDEC III-12V IGNITION
440A	DDEC III-12V IGNITION
451	DDEC III-A/C FAN CLUTCH
452	DDEC IV- SENSOR RETURN (ENGINE)
505	DDEC III-TACHOMETER DRIVE
509	DDEC III-STOP ENGINE LIGHT
510	DDEC III-FAST IDLE SIGNAL
524	DDEC III-ENGINE BRAKE DISABLE
524B	ZF SIGNAL – AUX. SENSOR THROTTLE
525	DDEC III-FAST IDLE SIGNAL
528	DDEC III-STOP ENG. OVERRIDE
531	DDEC III-CRUISE CLUTCH RELEASE
541	DDEC III-CRUISE SET SW
543	DDEC III-CRUISE STOP SW CUT IN
544	DDEC III-CRUISE ON/OFF SW
545	DDEC III-CRUISE RESUME SW
555	DDEC III-FAN CLUTCH SPEED# 1
556	DDEC III-VEHICLE SPEED (+)
557	DDEC III-VEHICLE SPEED (-)
563	DDEC III-FAN CLUTCH SPEED# 2
564	DDEC III-DIGITAL OUTPUT
565	DDEC III-ENGINE BRAKE ACTIVE
583	DDEC III-ENGINE BRAKE 4 CYL.
700	J1587(+)
701	J1587(-) – GROUND
705	ZF SIGNALS
706	ZF SIGNALS
707	ZF SIGNALS
717	ZF SIGNALS
718	ZF SIGNALS
719	ZF SIGNALS
720	ZF SIGNALS
740	EASY START VALVE
761	ZF SIGNALS

No.	DESCRIPTION
900	DDEC III-DATA LINK (+)
901	DDEC III-DATA LINK (-)
905	DDEC IV- AMBIANT AIR TEMPERATURE
908	DDEC III-HYDRAULIC PWM#1 OUTPUT
916	DDEC III-SENSOR SUPPLY (5VDC)
925	J1939-HIGH
926	J1939-LOW
927	J1939-SHIELD
952	DDEC III-SENSOR RETURN
953	DDEC III-BATTERY GRD
953A	THROTTLE INHIBIT
976	DDEC IV- RELATIVE HUMIDITY
979	DDEC III-ENGINE BRAKE 2 CYL.
988	DDEC III-CRUISE ENABLE LTS.

No.	DESCRIPTION

CIRCUIT NUMBER CODE

No.	DESCRIPTION
B A	INTERIOR LTS-110V FLUORESCENT
B B	INTERIOR LTS-110V FLUORESCENT
D 1	SOUND SYSTEM-FR RH SPEAKER
D 2	SOUND SYSTEM-FR RH SPEAKER
D 3	SOUND SYSTEM-FR RH SPEAKER
D 4	SOUND SYSTEM-RR RH SPEAKER
D 5	SOUND SYSTEM-RR RH SPEAKER
D 6	SOUND SYSTEM-RR RH SPEAKER
D 7	SOUND SYSTEM-RR RH SPEAKER
D 8	SOUND SYSTEM-RR RH SPEAKER
D 3 4	SOUND SYSTEM-RR RH SPEAKER
D 6 7	SOUND SYSTEM-RR RH SPEAKER
G 1	SOUND SYSTEM-FR LH SPEAKER
G 2	SOUND SYSTEM-FR LH SPEAKER
G 3	SOUND SYSTEM-FR LH SPEAKER
G 4	SOUND SYSTEM-RR LH SPEAKER
G 5	SOUND SYSTEM-RR LH SPEAKER
G 6	SOUND SYSTEM-RR LH SPEAKER
G 7	SOUND SYSTEM-RR LH SPEAKER
G 8	SOUND SYSTEM-RR LH SPEAKER
G 3 4	SOUND SYSTEM-RR LH SPEAKER
G 6 7	SOUND SYSTEM-RR LH SPEAKER
L 1 A	INTERIOR LTS-110V FLUORESCENT
L 1 B	INTERIOR LTS-110V FLUORESCENT
L 2 A	INTERIOR LTS-110V FLUORESCENT
L 2 B	INTERIOR LTS-110V FLUORESCENT
L 0	110V RECEPTACLE- 110V FLUOR.
L 1	110V RECEPTACLE- 110V FLUOR.
L 2	110V RECEPTACLE- 110V FLUOR.
R A	INTERIOR LTS-110V FLUORESCENT
R B	INTERIOR LTS-110V FLUORESCENT
S H 1	SHIELD CHASSIS GRD
S H 2	SHIELD CHASSIS GRD
S H 3	SHIELD CHASSIS GRD
S H 4	SHIELD CHASSIS GRD
S P 2	SPARE-FJB TO FR SERV CPT
S P 3	SPARE-FJB TO CENTER DASH
S P 4	SPARE-FJB TO CENTER DASH
S P 5	SPARE-RJB TO LUGG CPT #2
S P 6	SPARE-RJB TO LUGG CPT #1
S P 7	SPARE-RJB TO LUGG CPT #1
S P 8	SPARE-RJB TO LUGG CPT #1
S P 9	SPARE-RJB TO LUGG CPT #2
S P 10	SPARE-RJB TO LUGG CPT #1
S P 11	SPARE-FJB TO RJB
S P 12	SPARE-RJB TO ENGINE
S P 13	SPARE-RJB TO ENGINE
S P 14	SPARE-FJB TO RJB
S P 15	SPARE-RJB TO ENGINE
S P 16	SPARE-RJB TO ENGINE

No.	DESCRIPTION
S P 17	SPARE-RJB TO ENGINE
S P 18	SPARE-FJB TO RJB
S P 24	SPARE-RJB TO LAVATORY ROOF
S P 25	SPARE-RJB TO LAVATORY ROOF
S P 26	SPARE-RJB TO LAVATORY ROOF
S P 27	SPARE-RJB TO LH HAT RACK
S P 28	SPARE-RJB TO LH HAT RACK
S P 31	SPARE-RJB TO RH HAT RACK
S P 32	SPARE-RJB TO RH HAT RACK
S P 33	SPARE-FJB TO RJB
S P 38	SPARE-FJB TO RJB
S P 43	SPARE-FJB TO RJB
S P 45	SPARE-FJB TO RJB
S P 46	SPARE-RJB TO LH FR ROOF
S P 48	SPARE-RJB TO DASH CENTER PANEL
S P 56	SPARE-ENGINE TO RH SW PANEL
S P 57	SPARE-DASH CENTER PANEL TO ENG.
S P 58	SPARE-DASH CENTER PANEL TO ENG.
S P 59	SPARE-FJB TO ENGINE
S P 61	SPARE-FJB TO DASH RH PANEL
S P 68	SPARE-FJB TO ENGINE
S P 69	SPARE-FJB TO FR AXLE
S P 70	SPARE-FJB TO FR AXLE
S P 71	SPARE-FJB TO RH SW PANEL
S P 72	SPARE-FJB TO FR SERV CPT
S P 74	SPARE-FJB TO LH CONSOLE
S P 77	SPARE-FJB TO EVAPORATOR CPT
S P 78	SPARE-FJB TO CONDENSER CPT
S P 79	SPARE-FJB TO CONDENSER CPT
S P 87	SPARE-RJB TO LH HAT RACK
S P 88	SPARE-RJB TO RH HAT RACK
S P 92	SPARE-RJB TO CONDENSER CPT
S P 93	SPARE-RJB TO EVAPORATOR CPT
S P 94	SPARE-RJB TO RR ROOF
S P 95	SPARE-RJB TO RR ROOF
S P 96	SPARE-RJB TO LUGG CPT #2
S P 97	SPARE-RJB TO LUGG CPT #3
S P 98	SPARE-RJB TO LUGG CPT #3
S P 104	SPARE-RJB TO ENGINE CPT
S P 105	SPARE-FJB TO ENGINE
S P 106	SPARE-RJB TO BATT. CPT.
S P 107	SPARE-RJB TO BATT. CPT.
S P 108	SPARE-RJB TO BATT. CPT.
S P 109	SPARE-RJB TO ENGINE CPT.
S P 110	SPARE-RJB TO ENGINE CPT.
S P 111	SPARE-RJB TO ENGINE CPT.
S P 112	SPARE-RJB TO ENGINE CPT.
S P 114	SPARE-FJB TO U/DASH WIPER
S P 115	SPARE-FJB TO U/DASH WIPER
S P 116	SPARE-FJB TO U/DASH FLOOR

No.	DESCRIPTION
S P 117	SPARE-FJB TO U/DASH FLOOR
S P 119	SPARE-RJB TO ENGINE CPT.
SPZ 1	SPARE WIRE-ZF TRANSM.
SPZ 2	SPARE WIRE-ZF TRANSM.
SPZ 3	SPARE WIRE-ZF TRANSM.
SPZ 4	SPARE WIRE-ZF TRANSM.
SPZ 5	SPARE WIRE-ZF TRANSM.
SPZ 6	SPARE WIRE-ZF TRANSM.
W C	A/C & HEAT SYST-EVAP CTR SIGN
Y C	INTERIOR LTS-110V FLUORESCENT
Y D	INTERIOR LTS-110V FLUORESCENT
0	BC - BAT. CPT CHASSIS GRD
0	CONDENSER CPT GRD
0	RS - RR JCT BOX RLY GRD
0	GALLEY GRD
0 A	BC - SHIELD GRD
0 A	RS - RR JCT BOX RLY GRD
0 A	FRS - FR ROOF ACCES. GRD
0 A	RS - LUG. CPT ACCES. GRD
0 A	A/C SYSTEM-EVAP. GRD
0 A A	RS - VOLTAGE REGULATOR GRD
0 B 1	EC – RR JCT PANEL GRD
0 B	EC - ENGINE GRD
0 B	FRS - FR ROOF HEAT WIND GRD
0 B	RS - LUG. CPT ACCES. GRD
0 B E	RJB - BAT. EQUAL. BAT GRD
0 C	EC - STARTER MOTOR GRD
0 C	FS - SERV. CPT ACCES. GRD
0 C	BC - FAN EVAP. & CONDENSER GRD
0 C R	24V DISC. SW. RLY GRD SIGNAL
0 C S	24V DISC. SW. RLY GRD SIGNAL
0 C 1	FS - SERV. CPT ACCES. GRD
0 C 2	FS - SERV. CPT ACCES. GRD
0 C 3	FS - SERV. CPT ACCES. GRD
0 C 4	FS - FJB CPT ACCES. GRD
0 D	BC - FAN CONDENSER GRD
0 D	RS - HAT RACK ACCES. LH GRD
0 D	RJB – IGNITION RELAY
0 D F	RS - RR SIDE FLASH & MARK GRD
0 D R	RS - RJB DOCKING LT RESISTORS
0 E	RS - HAT RACK ACCES. LH GRD
0 E A	EATON TRANSMISSION GRD
0 F	RS - HAT RACK ACCES. RH GRD
0 G	RS - HAT RACK ACCES. RH GRD
0 H	RS - LAVATORY ACCES. GRD
0 J	FS - LH CONSOLE SW GRD
0 J	RS - RR ROOF ACCES. GRD
0 K	RS - RR ROOF ACCES. GRD
0 K	RS - RJB A/C JCT PANEL GRD
0 L	FS - FR SERVICE CPT LTS GRD

No.	DESCRIPTION
0 L 1	FS - FR SERVICE CPT LTS GRD
0 L 2	FS - FR SERVICE CPT LTS GRD
0 L 3	FS - FJB GRD
0 L 4	FS - FJB GRD
0 L 5	FS - CIGAR LIGHTER
0 L 6	FS - FRONT SERVICE CPT LTS GRD
0 L	RS - ENGINE CPT ACCES. GRD
0 L	ENTRANCE DOOR (SEDAN) GRD
0 L H	RS - RR END LAMPS LH GRD
0 M	FS - ELECTRICAL MOTOR GRD
0 M 1	FS - ELECTRICAL MOTOR GRD
0 M 3	FS - ELECTRICAL MOTOR GRD
0 M 4	FS - ELECTRICAL MOTOR GRD
0 M 5	FS - ELECTRICAL MOTOR GRD
0 M 6	FS - FJB GRD
0 M 7	FS - ELECTRICAL MOTOR GRD
0 M	RS - ENGINE CPT ACCES. GRD
0 M R	24V DISC. SW. RLY GRD SIGNAL
0 M S	24V DISC. SW. RLY GRD SIGNAL
0 N	RS - ENGINE CPT ACCES. GRD
0 P	RS - ENGINE CPT ACCES. GRD
0 R	FS - SOUND SYS. JCT PANEL GRD
0 R	RS - RJB GRD
0 R	RS - ENGINE CPT ACCES. GRD
0 R E	RADIO &CTRL HEAD CHASSIS GRD
0 R H	RS - RR END LAMPS RH GRD
0 S	12 VOLT RUN - GND RELAY
0 S A	EC-BOSCH ALT. GROUND
0 S 2	SOUND SYSTEM RADIO GRD
0 S 3	SOUND SYSTEM VIDEO GRD
0 S S	SOUNS SYSTEM BATT. GRD
0 T	FS - DASH ACCES. GRD
0 T 1	FS - DASH ACCES. GRD
0 T 2	FS - DASH ACCES. GRD
0 T 3	FS - DASH ACCES. GRD
0 T 4	FS - DASH ACCES. GRD
0 T 5	FS - HVAC DASH MODULE. GRD
O T 6	FS - HVAC DASH MODULE. GRD
0 V	RR JCT BOX CPT GRD STUD
0 V A	BATTERY TO EQUALISER 0V
0 W	FS - WT GND & SHIELD
0 W	RS - RR JCT BOX (WCL) GRD
0 W C	RS - RR JCT BOX GRD (WCL)
0 X	RS - RR JCT BOX GRD
0 Y	ABS FR JCT BOX CPT GRD STUD
0 Y	RR JCT BOX GRD
0 Y 1	ABS SYSTEM - GRD
0 Y 2	ABS SYSTEM - GRD
0 Y 3	ABS SYSTEM - GRD
0 Y 4	ABS SYSTEM - GRD

CIRCUIT NUMBER CODE

No.	DESCRIPTION
0 Y 5	ABS SYSTEM - GRD
0 Y 6	ABS SYSTEM - GRD
0 Z	RR JCT BOX CPT GRD STUD
0 Z 0	RR JCT BOX CPT GRD STUD
0Z 1	ZF TRANSM. GRD
0Z 2	ZF TRANSM. GRD
0 0	FJB & RJB BATT. GRD
0 0 A	FBG - T.T.LT. MODULES BATT. GRD
0 0 Y	FS - ABS MODULLE BATT. GRD
0 0 S S	SOUND SYSTEM BATT. GRD
1	TACHO SYSTEM - RPM SIGNAL +
2 B	A/C & HEAT SYSTEM-COOL SIGN
2 E	A/C & HEAT SYSTEM EVAP CONT
2 F	A/C & HEAT SYSTEM EVAP CONT
4	HOSTESS & PASSENGER CHIME
4 A	HOSTESS & PASSENGER CHIME
4 B	PASSENGER CHIME
4 C	HOSTESS CHIME
5	INTERIOR LTS-AISLE & EMERG. EXIT
5	UPPER WINDSHIELD DEFROSTER
5 D	UPPER WINDSHIELD DEFROSTER
5 E	UPPER WINDSHIELD DEFROSTER
5 N	INTERIOR LTS-EMERGENCY EXIT
5 N C	SPEED SIGNAL LOWER 5MPH
5 N O	SPEED SIGNAL HIGHER 5MPH
6	INTERIOR LTS-AISLE
7 B	ENTRANCE DOOR (SEDAN)
7 D	ENTRANCE DOOR (SEDAN)
7 D A	ENTRANCE DOOR (SEDAN)
9	INTERIOR LTS-ENGINE CPT
9 A	INTERIOR LTS-ENGINE CPT
9 B	INTERIOR LTS-ENGINE CPT
9 E	INTERIOR LTS-FR SERVICE CPT
9 F	INTERIOR LTS-FR SERVICE CPT
1 0	INTERIOR LTS-LUGGAGE CPT
1 0 A	INTERIOR LTS-LUGGAGE CPT
1 0 B	INTERIOR LTS-LUGGAGE CPT
1 0 D	INTERIOR LTS-LUGGAGE CPT
1 0 F	INTERIOR LTS-LUGGAGE CPT
1 0 H	INTERIOR LTS-LUGGAGE CPT
1 0 K	INTERIOR LTS-LUGGAGE CPT
1 0 R	INTERIOR LTS-LUGGAGE DOOR AJAR
1 1	FR DESTINATION SIGN
1 1 A	FR DESTINATION SIGN
1 1 B	FR DESTINATION SIGN
1 1 C	FR DESTINATION SIGN
1 1 D	FR DESTINATION SIGN
1 1 E	FR DESTINATION SIGN
1 1 K	FR DESTINATION SIGN
1 2	12V BAT ELECTRONIC JCT BLOCK

No.	DESCRIPTION
1 2	BAT CPT 12V BATTERY
1 2 A	FR JCT BOX 12V DISC SW
1 2 A	RR JCT BOX 12V DISC SW
1 2 B	12V BAT ELECTRICAL JCT BLOCK
1 2 B	RR JCT BOX 12V DISC SW
1 2 B	FR JCT BOX 12V DISC SW
1 2 B E	BAT. EQUALIZER MONITOR
1 2 C	FR JCT BOX 12V DISC SW
1 2 C	RR JCT BOX 12V HOT WIRE
1 2 C E	RR JCT BOX 12V HOT WIRE
1 2 D	BAT CPT 12V BATTERY
1 2 D A	12V IGNITION DISTRIBUTION
1 2 D T	TTLT MODULE
1 2 D Z	ZF TRANSM. HOTWIRE
1 2 E	FR JCT BOX 12V DISC SW
1 2 E	RR JCT BOX 12V DISC SW
1 2 F	BAT CPT 12V FJB & IC
1 2 F	FR JCT BOX 12V DISC SW
1 2 G	FR JCT BOX 12V DISC SW
1 2 H	12 V IGNITION D.T.RUN LIGHT
1 2 J	FR JCT BOX 12V DISC SW
1 2 I	12V IGNITION DISTRIBUTION
1 2 I	RR JCT BOX 12V IGNITION
1 2 K	12 VOLT IGN. TTLT & HVAC MODULE
1 2 I A	12V IGNITION DISTRIBUTION
1 2 I A	FR JCT BOX 12V IGNITION
1 2 I B	FR JCT BOX 12V IGNITION
1 2 I E	ABS-FR JCT BOX 12V IGNITION
1 2 I F	FR JCT BOX 12V IGNITION
1 2 I Z	12 V IGNITION FOR ZF TRANSM.
1 2 L X	CLUSTER (12V HOT WIRE)
1 2 M	ABS-FR JCT BOX 12V DISC. SW.
1 2 P	LH CONSOLE POWER OUTLET
1 2 R	BAT CPT 12V DISC RLY TO RJB
1 2 R	MEMORY BATTERY RADIO
1 2 S	SOUND SYSTEM 12V RADIO
1 2 S 1	SOUND SYSTEM 12V RADIO
1 2 S 1 A	DVD KARAOKE FEEDING
1 2 S 2	SOUND SYSTEM 12V RADIO
1 2 S 2 A	DVD KARAOKE FEEDING
1 2 S B	SOUND SYSTEM 12V FEEDING
1 2 S S	SOUND SYSTEM 12V FEEDING
1 2 V	RR JCT BOX 12V DISC SW
1 2 V A	BATTERY TO EQUALIZER 12V
1 2 V D	12V HOT WIRE DISTRIBUTION
1 2 V F	BAT CPT 12V FJB & IC
1 2 V I	12V IGNITION DISTRIBUTION
1 2 V R	BAT CPT 12V DISC RLY TO RJB
1 2 W	12V BATTERY DDEC III
1 2 W	ENTRANCE DOOR (SEDAN)

No.	DESCRIPTION
1 2 W A	ENTRANCE DOOR (SEDAN)
1 2 W B	ENTRANCE DOOR (SEDAN)
1 2 X	FR JCT BOX 12V DISC SW
1 2 X 2	FR JCT BOX 12V DISC SW
1 2 Y	FR JCT BOX 12V DISC SW
1 3 A	ALARM & SIGNAL-LO AIR PRIM.
1 3 B	ALARM & SIGNAL-LO AIR SEC.
1 4	LAVATORY-FLUSHING PUMP
1 4 A	LAVATORY-FLUSHING PUMP
1 4 P	LAVATORY-FLUSHING PUMP
1 5	EXTERIOR LTS-MULTI FUNC LEVEL
1 5 A	WIPER & WASHER UPPER WINDSHIELD
1 6	SPEED - SIGNAL +
1 6 A	SPEED - SIGNAL +
1 6 T	SPEED - SIGNAL +
1 7	EXTERIOR LTS-FLASHER UNIT
1 7 A	EXTERIOR LTS-FLASHER UNIT
1 9	DIFFERENTIAL OIL TEMP
2 0	SPEED - SIGNAL -
2 0 T	SPEED - SIGNAL -
2 0 W	SPEED - SIGNAL -
2 1	EXTERIOR LTS-DIRECTIONAL LH
2 1 A	EXTERIOR LTS-DIRECTIONAL LH
2 1 B	EXTERIOR LTS-HAZARD
2 1 C	EXTERIOR LTS-CORNERING LH
2 1 H	EXTERIOR LTS-DIRECTIONAL LH
2 1 K	EXTERIOR LTS-CORNERING
2 1 N	EXTERIOR LTS-CORNERING LH
2 1 P	EXTERIOR LTS-CORNERING LH
2 3	EXTERIOR LTS-DIRECTIONAL RH
2 3	EXTERIOR LTS-DIRECTIONAL RH
2 3 A	EXTERIOR LTS-DIRECTIONAL RH
2 3 B	EXTERIOR LTS-DIRECTIONAL RH
2 3 C	EXTERIOR LTS-CORNERING RH
2 3 N	EXTERIOR LTS-CORNERING RH
2 3 P	EXTERIOR LTS-CORNERING RH
2 4	BAT CPT 24V BATTERY
2 4	FR JCT BOX 24V DISC SW
2 4 A	BOOSTER BLOCK 24V DISC SW
2 4 A	FR JCT BOX 24V DISC SW
2 4 A	RR JCT BOX 24V DISC SW
2 4 B	24V STARTER RLY FEEDING
2 4 B	FR JCT BOX 24V DISC SW
2 4 B A	RR JCT BOX 24V DISC SW
2 4 B C	24 VOLT BATT. CHARGER
2 4 B E	RJB CPT-BAT EQ MONITOR HOT WIRE
2 4 C	FR JCT BOX 24V DISC SW
2 4 C	RR JCT BOX 24V DISC SW
2 4 D	BAT CPT 24V HOT WIRE
2 4 D	FR JCT BOX 24V HOT WIRE

No.	DESCRIPTION
2 4 D	RR JCT BOX 24V HOT WIRE
2 4 D A	A/C JCT BOX 24V HOT WIRE
2 4 D Z	24 V HOT WIRE FOR ZF TRANSM.
2 4 E	BAT CPT 24V DISC SW
2 4 E	FR JCT BOX 24V DISC SW
2 4 E	RR JCT BOX 24V DISC SW
2 4 F	FR JCT BOX 24V DISC SW
2 4 F	RR JCT BOX 24V DISC SW
2 4 G	FR JCT BOX 24V DISC SW
2 4 G	RR JCT BOX 24V DISC SW
2 4 H	FR JCT BOX 24V DISC SW
2 4 H	RR JCT BOX 24V DISC SW
2 4 I	FR JCT BOX 24V IGNITION
2 4 I	RR JCT BOX 24V IGNITION
2 4 I A	FR JCT BOX 24V IGNITION
2 4 I B	FR JCT BOX 24V IGNITION
2 4 I B	RR JCT BOX 24V IGNITION
2 4 I C	FR JCT BOX 24V IGNITION
2 4 I C	RR JCT BOX 24V IGNITION
2 4 I F	FJB 24VOLT IGNITION
2 4 I Z	ZF TANSM. IGNITION
2 4 P	FR JCT BOX 24V DISC SW
2 4 S	24V DISC SW RLY SIGNAL
2 4 S 1	SOUND SYSTEM 24V AMPLIFIER
2 4 S 2	SOUND SYSTEM 24V AMPLIFIER
2 4 S 3	SOUND SYSTEM 24V VIDEO
2 4 S 4	SOUND SYSTEM 24V VIDEO
2 4 S B	SOUND SYSTEM 24V FEEDING
2 4 S S	SOUND SYSTEM 24V FEEDING
2 4 R	24 VOLTS FRONT CAMERA SW.
2 4 V 2	RR JCT BOX 24V DISC SW
2 4 V 3	RR JCT BOX 24V DISC SW
2 4 V 4	RR JCT BOX 24V DISC SW
2 4 V 5	RR JCT BOX 24V DISC SW
2 4 V D	24V HOT WIRE RR JCT BOX
2 4 V F	BAT CPT 24V SW TO FJB & IC
2 4 V A	BATTERY TO EQUALIZER 24V
2 4 V I	RR JCT BOX 24V IGNITION
2 4 V R	BAT CPT 24V DISC SW TO RJB
2 4 W	RR JCT BOX 24V DISC SW (WCL)
2 4 W C	BATT.CPT TO HYD. PUMP (WCL)
2 4 W L	24V BATTERY-HYD. PUMP (WCL)
2 4 Z Z	24 VOLT - ZF TRANSM. POWER
2 5	24 VOLT ALT.SIGNAL MODULE
2 5 A 1	PRE-EXITATION ALT. BOSCH #1
2 5 A 2	PRE-EXITATION ALT. BOSCH #2
2 5 A	T.T. LT. ALTERNATOR #1
2 5 B	12 VOLTS IGN. ALT. SIGNAL MODULE
2 5 D	12 V. ENGINE RUN / HVAC SYSTEM
2 5 E	USE ON VIP ONLY

CIRCUIT NUMBER CODE

No.	DESCRIPTION
2 5 F	12 VOLT IGN. DISTRIBUTION
2 5 H	24 VOLT IGN. ALT. BOSCH
2 5 K	T.T. LT. ALTERNATOR #2
2 6 A	CIGAR LIGHTER
2 6	DRIVER'S WINDOW LIFTER
2 6 B	DRIVER'S WINDOW LIFTER
2 6 C	DRIVER'S WINDOW LIFTER
2 7	LAVATORY-EMERGENCY SONALERT
2 8 A	A/C & HEAT SYSTEM-HI PRESSURE
2 8 H	TTLT HI LO PRESS
2 8 T	TTLT HI LO PRESS
2 9	A/C & HEAT SYSTEM-DRIVER'S HTR
2 9 A	A/C & HEAT SYSTEM-DRIVER'S HTR
2 9 B	A/C & HEAT SYSTEM-DRIVER'S HTR
2 9 H	HVAC DASH MODULE
3 0 A	GALLEY
3 1 A	A/C & HEAT SYSTEM-UNLOADER
3 1 B	A/C & HEAT SYSTEM-UNLOADER
3 1 B	WIPER & WASHER SYSTEM
3 1 C	WIPER & WASHER SYSTEM
3 1 D	WIPER & WASHER SYSTEM
3 1 E	WIPER & WASHER SYSTEM
3 1 J	WIPER & WASHER SYSTEM
3 1 X	WIPER & WASHER SYSTEM
3 2	EXTERIOR LTS-BACK-UP
3 2 B	EXTERIOR LTS-BACK-UP
3 2 C	BACK-UP PWR & SIGNAL
3 2 D	BACK-UP ALARM
3 5	ENTRANCE DOOR (SEDAN)
3 5 B	ENTRANCE DOOR (SEDAN)
3 5 B B	ENTRANCE DOOR (SEDAN)
3 5 D	ENTRANCE DOOR (SEDAN)
3 6	JACOB BRAKE SYSREM
3 6 A	JACOB BRAKE SYSREM
3 8	INTERIOR LTS-24V FLUORESCENT
3 8 A	INTERIOR LTS-24V FLUORESCENT
3 8 C	INTERIOR LTS-24V FLUORESCENT
3 8 D	INTERIOR LTS-24V FLUORESCENT
3 9	INTERIOR LTS-24V LH CONSOLE SW
3 9 A	INTERIOR LTS-DRIVER"S LTS
3 9 P	READING LIGHTS
4 1	A/C & HEAT SYSTEM-COND FAN MOT
4 1 A	A/C & HEAT SYSTEM-COND FAN MOT
4 1 B	A/C & HEAT SYSTEM-COND FAN MOT
4 2	A/C & HEAT SYSTEM-COND FAN MOT
4 2 A	A/C & HEAT SYSTEM-COND FAN MOT
4 3	HAT RACK FAN
4 3 A	HAT RACK FAN
4 3 B	HAT RACK FAN
4 3 D	HAT RACK FAN

No.	DESCRIPTION
4 3 E	HAT RACK FAN
4 3 F	HAT RACK FAN
4 3 G	HAT RACK FAN
4 4	EXTERIOR LTS-FOG
4 4 A	EXTERIOR LTS-FOG
4 4 B	EXTERIOR LTS-FOG
4 4 C	EXTERIOR LTS-FOG & HAZARD
4 5 A	A/C & HEAT SYSTEM-FULL AIR
4 5 B	A/C & HEAT SYSTEM-WATER PUMP
4 5 C	A/C & HEAT SYSTEM-WATER VALVE
4 5 D	A/C & HEAT SYSTEM-WATER VALVE
4 5 E	A/C & HEAT SYSTEM-HEAT 1 SIGN
4 5 G	A/C & HEAT SYSTEM-DRIVER'S HTR
4 5 H	A/C & HEAT SYSTEM-DRIVER'S HTR
4 5 W	A/C & HEAT SYSTEM-COND. DOOR AJAR
4 6	EXTERIOR LTS-MARKER
4 6 A	EXTERIOR LTS-MARKER
4 6 B	EXTERIOR LTS-MARKER
4 6 B	EXTERIOR LTS-MARKER
4 6 C	EXTERIOR LTS-MARKER
4 7	A/C & HEAT SYSTEM-DRIVER'S HTR
4 8	ENTRANCE DOOR (SEDAN)
4 8 A	ENTRANCE DOOR (SEDAN)
4 9	ENTRANCE DOOR (SEDAN)
4 9 A	ENTRANCE DOOR (SEDAN)
5 2	ALARM & SIGNAL-ELEC. HORN
5 2 A	ALARM & SIGNAL-ELEC. HORN
5 2 B	ALARM & SIGNAL- AIR HORN
5 2 C	ALARM & SIGNAL- AIR HORN
5 3	ALARM & SIGNAL-ELEC. HORN
5 3 A	WIPER & WASHER SYSTEM
5 3 B	WIPER & WASHER SYSTEM
5 3 C	WIPER & WASHER SYSTEM
5 3 E	WIPER & WASHER SYSTEM
5 3 J	WIPER & WASHER SYSTEM
5 5	EXTERIOR LTS-HI BEAM
5 7	EXTERIOR LTS-HI BEAM
5 7 A	A/C & HEAT SYSTEM-WATER PUMP
5 7 A	EXTERIOR LTS-HI BEAM
5 7 B	A/C & HEAT SYSTEM-WATER PUMP
5 7 C	PRE-HEAT WATER HEATER
5 8	EXTERIOR LTS-LO BEAM
5 8 A	EXTERIOR LTS-LO BEAM
5 8 B	EXTERIOR LTS-LO BEAM
5 8 E	EXTERIOR LTS-LO BEAM
5 9 A	JACOB BRAKE SYSTEM
6 1	EXTERIOR LTS-24V FEED SW
6 1 A	EXTERIOR LTS-HEAD SIGNAL
6 2	LAVATORY-OCCUPIED LT

No.	DESCRIPTION
6 2 A	LAVATORY-FLUOR LT
6 2 B	LAVATORY-FLUOR LT
6 2 E	LAVATORY-OCCUP & FLUOR LT
6 3	EXTERIOR LTS-CLEARANCE
6 3 A	EXTERIOR LTS-CLEARANCE
6 3 B	EXTERIOR LTS-CLEARANCE
6 3 C	EXTERIOR LTS-MARKER SIGNAL
6 3 D	EXTERIOR LTS-MARKER & TAIL
6 3 E	EXTERIOR LTS-CLEARANCE
6 3 F	EXTERIOR LTS-MARKER BLINKER
6 3 H	EXTERIOR LTS-TAIL
6 4	DRIVERS FAN
6 4 B	DRIVERS FAN
6 4 C	DRIVERS FAN
6 5	FOOT DAMPER MOTOR
6 5 A	FOOT DAMPER MOTOR
6 5 D	DRIVER REC. DAMPER
6 6	O_PASS. ON/OFF
6 7	24 VOLT RUN DISTRIBUTION
6 7 A	A/C & HEAT SYSTEM
6 7 C	HEATING WINDSHIELD
6 7 K	A/C & HEAT SYSTEM-COND FAN CTR
6 7 L	A/C & HEAT SYSTEM-COND FAN CTR
6 7 X	A/C & HEAT SYSTEM
6 8	DASH & DEFROST DAMPER MOTOR
6 8 A	DASH & DEFROST DAMPER MOTOR
7 0	INTERIOR LTS-HAT RACK & RR RUN.
7 2	SUN VISOR-FEEDING
7 2 A	SUN VISOR-RH
7 2 B	SUN VISOR-RH
7 2 C	SUN VISOR-LH
7 2 D	SUN VISOR-LH
7 3	LAVATORY-FEEDING
7 4	INTERIOR LTS-READING RH
7 4 A	INTERIOR LTS-READING RH
7 4 D	INTERIOR LTS-READING SIGNAL
7 5	INTERIOR LTS-READING LH
7 5 A	INTERIOR LTS-READING LH
7 6	FUEL TANK GAUGE
7 6 B	LOW FUEL LT & ETHER COLD START
7 6 C	LOW FUEL LT
7 6 P	FUEL PRIME PUMP
7 6 M	FUEL PRIME PUMP
7 7 B	A/C & HEAT SYSTEM-COMPRESSOR
7 7 C	A/C & HEAT SYSTEM-COMPRESSOR
7 7 H	A/C & HEAT SYSTEM-COMPRESSOR
8 1	EXTERIOR LTS-STOP SW
8 2	EXTERIOR LTS-STOP SIGNAL
8 2 A	EXTERIOR LTS-STOP SIGNAL
8 2 B	EXTERIOR LTS-STOP LTS

No.	DESCRIPTION
8 2 K	EXTERIOR LTS-STOP PARK BRK
8 2 L	EXTERIOR LTS-LH STOP
8 2 R	EXTERIOR LTS-LH STOP
8 3	ENGINE CTR-KEY SW ACCES SIGN
8 4	ENGINE CTR-KEY SW ACCES SIGN
8 5	ENGINE CTR-KEY SWIGNITION SIGN
8 5	24V IGNITION SIGNAL
8 5 A	24V IGN DASH INSTRUMENTATION
8 5 B	ENGINE CTR-24V IGNITION
8 5 C	PARKING BRAKE SWITCH
8 5 E	STOP LIGHT RLY
8 5 F	ENGINE CTR-ENGINE CTR SW IGN
8 5 F	LO AIR SONALERT
8 5 G	RADIATOR FAN CLUTCH
8 5 X	12V IGN ABS
8 5 Y	ABS SYSTEM
8 6	ENGINE CTR-STARTER SOL SIGN
8 6 A	ENGINE CTR-STARTER SOL SIGN
8 6 F	ENGINE CTR-STARTER TTLT SIGN
8 6 T	ENGINE CTR-STARTER TTLT SIGN
8 8	ENGINE CTR-RR START SIGNAL
8 9	ENGINE CTR-RR START SIGNAL
9 0 B	A/C & HEAT SYSTEM-COND FAN MOT
9 0 B	ENGINE CTR-MAST KEY SW FEED
9 0 C	A/C & HEAT SYSTEM-COND FAN MOT
9 0 F	CHARG SYST-VOLTAGE REGUL. "B"
9 0 H	A/C & HEAT SYSTEM-EVAP FAN MOT
9 1	PARKING BRAKE SW SIGNAL
9 1 A	DDEC-FAST IDLE SIGNAL
9 1 S	SONALERT PARKING BRAKE
9 1 W	PARK, BRAKE SW SIGN (WCL)
9 2	BATTERY EQUALIZER-CHECK BALANCE
9 3	BATTERY EQUALIZER-CHECK LO/HI
9 5 A	ENGINE BRAKE & RETARDER SYSTEM
9 7	TACHOMETER (-)
1 0 0	INTERIOR LTS-GENERAL
1 0 0 A	INTERIOR LTS-GENERAL
1 0 0 B	INTERIOR LTS-GENERAL
1 0 1	24V STARTER SOL FEEDING
1 0 1	WORLD TRANSM-LO SIGN SOL. LO
1 0 2	WORLD TRANSM-SOL. SUPPLY
1 0 2 A	24V STARTER TO BOSCH ALTERNATOR
1 0 3	LOW BUOY
1 0 4	WORLD TRANSM-SOL. FORWARD
1 0 5	WORLD TRANSM-RETARDER & SUMP
1 0 5 W	WORLD TRANSM-RETARDER & SUMP
1 0 6	WORLD TRANSM-OIL LEVEL HI
1 0 7	WORLD TRANSM-LOCKUP SOL. HI
1 0 8	WORLD TRANSM-REM. PWR WAKE UP
1 0 9	WORLD TRANSM-RET. SOL. LO

CIRCUIT NUMBER CODE

No.	DESCRIPTION
110	ALARM & SIGNAL-WATER TEMP
110	WORLD TRANSM-LOCKUP SOL. LO
111	WORLD TRANSM-SOL. C6
112	WORLD TRANSM-SPARE OUTPUT (+)
113	ALARM & SIGNAL-OIL PRESS
113	WORLD TRANSM-REVERSE WARNING
113W	WORLD TR.-REVERSE WARNING
113Z	ZF TRANSM.- REVERSE SIGNAL
114	INTERIOR LTS-DASH LT REGUL.
114	WORLD TRANSM-SPARE OUTPUT (-)
114A	INTERIOR LTS-DASH LT
114B	INTERIOR LTS-DASH LT REGUL.
114D	INTERIOR LTS-DASH LT REGUL.
114E	INTERIOR LTS-DASH LT REGUL.
115	ALARM & SIGNAL-TAG PRESS
115	DDEC III-COOLANT LEVEL
115	WORLD TRANSM-DO NOT SHIFT SIGN
115C	DDEC III-COOLANT LEVEL
115W	WORLD TRANSM-DO NOT SHIFT SIGN
115W	ZF TRANSM. - CHECK TRANSM. TTLT
116	WORLD TRANSM-LO SIGNAL SOL. HI
116B	A/C & HEAT SYSTEM-DRIVER'S HTR
117	WORLD TRANSM-SPARE INPUT (-)
117A	ALARM & SIGNAL-TRANSM OIL TEMP
117A	ALARM & SIGNAL-TRANSM OIL TEMP
118	WORLD TRANSM-SPARE INPUT (+)
119	WORLD TRANSM-ENG BRK INPUT (+)
120	WORLD TRANSM-SOL. C1
121	WORLD TRANSM-SOL. GRD 2
122	A/C & HEAT SYSTEM-DRIVER'S HTR
122	A/C & HEAT SYSTEM-FRESH AIR
122	WORLD TRANSM-SOL. GRD 4
122A	A/C & HEAT SYSTEM-FRESH AIR
123	WORLD TRANSM-NEUTRAL START
123A	ALARM & SIGNAL-FIRE DETECTOR
123B	ALARM & SIGNAL-FIRE DETECTOR
124	WORLD TRANSM-THROTTLE (HI)
125	WORLD TRANSM-RET. INDICATOR
125	GALLEY LAMP
125T	GALLEY LAMP
125W	WORLD TRANSM-RET. INDICATOR
126	KNEELING SYSTEM
126A	KNEELING SYSTEM
126B	KNEELING SYSTEM
126C	KNEELING SYSTEM
126D	KNEELING SYSTEM
126E	KNEELING SYSTEM
126F	KNEELING SYSTEM
126G	KNEELING SYSTEM
126H	KNEELING SYSTEM

No.	DESCRIPTION
126K	KNEELING SYSTEM
126P	KNEELING SYSTEM
126R	KNEELING SYSTEM
126W	5 MPH N.C. SIGNAL (WCL)
126S	KNEELING SYSTEM
126T	KNEELING SYSTEM
127	WORLD TRANSM-LUBE PRESS SW.
127	WORLD TRANSM-RETARDER FEED SOL.
127	POWER- PRE-HEAT WATER HEATER
127A	PRE-HEAT WATER HEATER
128A	PRE-HEAT WATER HEATER
128B	PRE-HEAT - BURNER ON SIGNAL
128	WORLD TRANSM-SOL. C2
129	POWER- PRE-HEAT WATER HEATER
129B	POWER- PRE-HEAT WATER HEATER
129	WORLD TRANSM-SOL. C5
130	A/C & HEAT SYSTEM-EVAP FAN MOTOR
130	WORLD TRANSM-SOL. GRD 3
131	WORLD TRANSM-SOL. C4
132	WORLD TRANSM-ENG BRK OUTPUT (-)
132W	WORLD TRANSM-ENG BRK OUTPUT (-)
133	GALLEY-HEAT CONTAINERS
133A	GALLEY-HEAT CONTAINERS
133B	GALLEY-HEAT CONTAINERS
133C	GALLEY-HEAT CONTAINERS
133	WORLD TRANSM-RET. ACTUATOR HI
134	GALLEY-HEAT CONTAINERS
134A	GALLEY-HEAT CONTAINERS
134	WORLD TRANSM-RET. APPLY SOL. HI
135	A/C & HEAT SYSTEM-AIR SENSOR
135A	A/C & HEAT SYSTEM-AIR SENSOR
135	WORLD TRANSM-ANALOG GRD
135D	WORLD TRANSM-RETARDER RES MOD
135C	WORLD TRANSM-RETARDER TEMP
136	GALLEY-ACCESSORIES
136	WORLD TRANSM-ECU POWER
136V	WORLD TRANSM-12V BATTERY
136W	WORLD TRANSM-12V BATTERY
136X	WORLD TRANSM-12V BATTERY
137	WORLD TRANSM-RETARDER
137A	MIRROR (SPARTAN & RAMCO)
137B	RR VIEW MIRROR (SPARTAN)
137C	RR VIEW MIRROR (SPARTAN)
137D	RR VIEW MIRROR (SPARTAN)
137E	RR VIEW MIRROR (SPARTAN)
137G	RR VIEW MIRROR (SPARTAN)
138	ABS SYSTEM
138	WORLD TRANSM-RETARDER TEMP
138A	ABS SYSTEM
139	ABS SYSTEM

No.	DESCRIPTION
139	WORLD TRANSM-OUTPUT SPEED HI
140	ABS SYSTEM
140	WORLD TRANSM-OUTPUT SPEED LO
141	ABS SYSTEM
141	WORLD TRANSM-ENGINE SPEED HI
142	ABS SYSTEM
142	WORLD TRANSM-SERIAL COM. A
143	ABS SYSTEM
143	WORLD TRANSM-ECU BATTERY GRD
143A	ABS SYSTEM
143W	WORLD TRANSM-BATTERY GRD
144	ABS SYSTEM
144	WORLD TRANSM-ECU CHASSIS GRD
144A	ABS SYSTEM
145	ABS SYSTEM
146	ABS SYSTEM
146A	TRANSMISSION-12V IGNITION
146	WORLD TRANSM-IGNITION SENSE
146W	WORLD TRANSM-12V IGNITION
146X	WORLD TRANSM-12V IGNITION
147	ABS SYSTEM
147	WORLD TRANSM-OIL TEMP
147A	ETHER COLD START & D.R.L.
147C	ETHER COLD START
148	ABS SYSTEM
148	WORLD TRANSM-OUTPUT SPEED LO
149	ABS SYSTEM
149	WORLD TRANSM-TURBINE SPEED HI
149A	ABS SYSTEM
150	DDEC III-ECM BATTERY GRD
150	WORLD TRANSM-ENGINE SPEED LO
150A	DDEC III-ECM BATTERY GRD
151	ABS SYSTEM
151	DDEC III-ECM BATTERY GRD
151	WORLD TRANSM-SERIAL COM. B
152	ABS SYSTEM
153	WORLD TRANSM-SPARE INPUT (-)
154	ABS SYSTEM
154	WORLD TRANSM-ABS RET. INPUT
155	WORLD TRANSM-SPARE INPUT (-)
156	WORLD TRANSM-THROTTLE POS.
156A	ABS SYSTEM
157	WORLD TRANSM-SPEEDO SIGNAL
157B	ABS SYSTEM
157D	A.T.C. SYSTEM
157E	A.T.C. SYSTEM
157F	A.T.C. SYSTEM
158	WORLD TRANSM-DIMMER
160	ALARM & SIGNAL-TAG PRESS SW
160	WORLD TRANSM-SER. INTERFACE (-)

No.	DESCRIPTION
161	WORLD TRANSM-SIGNAL GRD
161B	WORLD TRANSM-SIGNAL GRD
162	WORLD TRANSM-PRESS. SW C3
163	WORLD TRANSM-RETARDER ENABLE
164	WORLD TRANSM-RET. ACTUATOR SIGN
165	A/C & HEAT SYSTEM-TRANSMITER
165	WORLD TRANSM-OIL LEVEL SIGNAL
166B	A/C & HEAT SYSTEM-EVAP. MOD.
167	W. TR.-OUT SPEED INTERLOCK
167Z	ZF- OUT SPEED INTERLOCK
168	A/C & HEAT SYSTEM-HUMIDISTAT
168	WORLD TRANSM-SER. INTERFACE (+)
168A	A/C & HEAT SYSTEM-HUMIDISTAT
170	LUGGAGE DOOR LOCK
170C	LUGGAGE DOOR LOCK
170E	LUGGAGE DOOR LOCK
170H	LUGGAGE DOOR LOCK
181A	THERMOMETER INSIDE SENSOR
181B	THERMOMETER INSIDE SENSOR
181C	THERMOMETER OUTSIDE SENSOR
181D	THERMOMETER OUTSIDE SENSOR
197	FUEL WATER FILTER
197A	FUEL WATER FILTER
197B	FUEL WATER FILTER
198	FILTER FUEL HEATER
199	AIR FILTER RESTRICTION SENDER
201	WORLD TRANSM-SPARE
202	WORLD TRANSM-SPARE
203	WORLD TRANSM-SPARE
204	WORLD TRANSM-SPARE
205	WORLD TRANSM-SPARE
206	WORLD TRANSM-SPARE
214	WORLD TRANSM-BACK UP SIGNAL
225	LAVATORY FAN
225A	LAVATORY FAN
231	NEUTRAL SIGNAL GRD
231A	NEUTRAL COIL RELAY FEED SIGNAL
231W	NEUTRAL SIGNAL GRD (WCL)
231Z	ZF NEUTRAL SIGNAL GRD
240	DDEC III-ECM 12V FEEDING
241	DDEC III-ECM 12V FEEDING
251A	DDEC III - DATA LOGGER 12 H.W.
251	DDEC III - PRODRIVER 12V H.W.
253	GALLEY-MICROWAVE
254	GALLEY-12V FRIGO NORCOLD
254A	GALLEY-FRIGO
255	GALLEY-COFEEMAKER
255A	GALLEY-COFEEMAKER
257	WINDSHIELD HEATED
257A	WINDSHIELD HEATED

CIRCUIT NUMBER CODE

No.	DESCRIPTION
257 B	WINDSHIELD HEATED
257 C	WINDSHIELD HEATED
257 D	WINDSHIELD HEATED SPARE
257 E	WINDSHIELD HEATED SPARE
258	WINDSHIELD HEATED
258 A	WINDSHIELD HEATED
259	WINDSHIELD HEATED
259 A	WINDSHIELD HEATED
260	WINDOW AJAR
290	FAN CLUTCH RADIATOR
290	FAN CLUTCH RADIATOR
291	FAN CLUTCH RADIATOR SPD 1
292	FAN CLUTCH RADIATOR SPD 2
300	DOOR AJAR MAGN.SW. (WCL)
300 A	POWER SYSTEM SW. (WCL)
300 B	DOOR AJAR ALARM (WCL)
301	POWER SYSTEM SW. (WCL)
302	DOOR AJAR T.T.LT. (WCL)
302 A	DOOR AJAR ALARM SIGN.(WCL)
302 B	DOOR AJAR MAGN.SW. (WCL)
303	REMOTE WALL SW. DWN (WCL)
304	REMOTE WALL SW. UP (WCL)
305	PARK. BRAKE SOL. VALVE (WCL)
305 A	PARK. BRAKE SAFETY SW. (WCL)
306	CONTROL SYSTEM (WCL RICON)
307	CONTROL SYSTEM (WCL RICON)
308	CONTROL SYSTEM (WCL RICON)
309	CONTROL SYSTEM (WCL RICON)
310	EATON TRANSMISSION
311	EATON TRANSMISSION
312	EATON TRANSMISSION
313	EATON TRANSMISSION
314	EATON TRANSMISSION
315	EATON TRANSMISSIOM
316	EATON TRANSMISSION - EPL
317	EATON TRANSMISSION
318	EATON TRANSMISSION
319	EATON TRANSMISSION
320	EATON TRANSMISSION
321	EATON TRANSMISSION
322	EATON TRANSMISSIION
323	EATON TRANSMISSION
324	EATON TRANSMISSION
325	EATON TRANSMISSION
326	EATON TRANSMISSION
327	EATON TRANSMISSION
328	EATON TRANSMISSION
329	EATON TRANSMISSION
330	EATON TRANSMISSION - EPL
331	EATON TRANSMISSION - EPL

No.	DESCRIPTION
332	EATON TRANSMISSION
333	EATON TRANSMISSION - 12V BATTERY
334	EATON GENERATION 2
416	DDEV IV- SENSOR SUPPLY 5VDC
417	DDEC III-LIMIT SPEED GOVERNOR
419	DDEC III-CHECK ENGINE LIGHT
439	DDEC III-12V IGNITION
440	DDEC III-12V IGNITION
440 A	DDEC III-12V IGNITION
451	DDEC III-A/C FAN CLUTCH
452	DDEC IV- SENSOR RETURN (ENGINE)
505	DDEC III-TACHOMETER DRIVE
509	DDEC III-STOP ENGINE LIGHT
510	DDEC III-FAST IDLE SIGNAL
524	DDEC III-ENGINE BRAKE DISABLE
524 B	ZF SIGNAL – AUX. SENSOR THROTTLE
525	DDEC III-FAST IDLE SIGNAL
528	DDEC III-STOP ENG. OVERRIDE
531	DDEC III-CRUISE CLUTCH RELEASE
541	DDEC III-CRUISE SET SW
543	DDEC III-CRUISE STOP SW CUT IN
544	DDEC III-CRUISE ON/OFF SW
545	DDEC III-CRUISE RESUME SW
555	DDEC III-FAN CLUTCH SPEED# 1
556	DDEC III-VEHICLE SPEED (+)
557	DDEC III-VEHICLE SPEED (-)
563	DDEC III-FAN CLUTCH SPEED# 2
564	DDEC III-DIGITAL OUTPUT
565	DDEC III-ENGINE BRAKE ACTIVE
565 Z	DECELERATION LTS
583	DDEC III-ENGINE BRAKE 4 CYL.
700	J1587(+)
701	J1587(-) – GROUND
705	ZF SIGNALS
706	ZF SIGNALS
707	ZF SIGNALS
717	ZF SIGNALS
718	ZF SIGNALS
719	ZF SIGNALS
720	ZF SIGNALS
740	EASY START VALVE
761	ZF SIGNALS

No.	DESCRIPTION
900	DDEC III-DATA LINK (+)
901	DDEC III-DATA LINK (-)
905	DDEC IV- AMBIANT AIR TEMPERATURE
908	DDEC III-HYDRAULIC PWM#1 OUTPUT
916	DDEC III-SENSOR SUPPLY (5VDC)
925	J1939-HIGH
926	J1939-LOW
927	J1939-SHIELD
952	DDEC III-SENSOR RETURN
953	DDEC III-BATTERY GRD
953 A	THROTTLE INHIBIT
976	DDEC IV- RELATIVE HUMIDITY
979	DDEC III-ENGINE BRAKE 2 CYL.
988	DDEC III-CRUISE ENABLE LTS.

No.	DESCRIPTION

CIRCUIT NUMBER CODE

No.	DESCRIPTION
B A	INTERIOR LTS-110V FLUORESCENT
B B	INTERIOR LTS-110V FLUORESCENT
D 1	SOUND SYSTEM-FR RH SPEAKER
D 2	SOUND SYSTEM-FR RH SPEAKER
D 3	SOUND SYSTEM-FR RH SPEAKER
D 4	SOUND SYSTEM-RR RH SPEAKER
D 5	SOUND SYSTEM-RR RH SPEAKER
D 6	SOUND SYSTEM-RR RH SPEAKER
D 7	SOUND SYSTEM-RR RH SPEAKER
D 8	SOUND SYSTEM-RR RH SPEAKER
D 3 4	SOUND SYSTEM-RR RH SPEAKER
D 6 7	SOUND SYSTEM-RR RH SPEAKER
G 1	SOUND SYSTEM-FR LH SPEAKER
G 2	SOUND SYSTEM-FR LH SPEAKER
G 3	SOUND SYSTEM-FR LH SPEAKER
G 4	SOUND SYSTEM-RR LH SPEAKER
G 5	SOUND SYSTEM-RR LH SPEAKER
G 6	SOUND SYSTEM-RR LH SPEAKER
G 7	SOUND SYSTEM-RR LH SPEAKER
G 8	SOUND SYSTEM-RR LH SPEAKER
G 3 4	SOUND SYSTEM-RR LH SPEAKER
G 6 7	SOUND SYSTEM-RR LH SPEAKER
L 1 A	INTERIOR LTS-110V FLUORESCENT
L 1 B	INTERIOR LTS-110V FLUORESCENT
L 2 A	INTERIOR LTS-110V FLUORESCENT
L 2 B	INTERIOR LTS-110V FLUORESCENT
L 0	110V RECEPTACLE- 110V FLUOR.
L 1	110V RECEPTACLE- 110V FLUOR.
L 2	110V RECEPTACLE- 110V FLUOR.
R A	INTERIOR LTS-110V FLUORESCENT
R B	INTERIOR LTS-110V FLUORESCENT
S H 1	SHIELD CHASSIS GRD
S H 2	SHIELD CHASSIS GRD
S H 3	SHIELD CHASSIS GRD
S H 4	SHIELD CHASSIS GRD
S P 2	SPARE-FJB TO FR SERV CPT
S P 3	SPARE-FJB TO CENTER DASH
S P 4	SPARE-FJB TO CENTER DASH
S P 5	SPARE-RJB TO LUGG CPT #2
S P 6	SPARE-RJB TO LUGG CPT #1
S P 7	SPARE-RJB TO LUGG CPT #1
S P 8	SPARE-RJB TO LUGG CPT #1
S P 9	SPARE-RJB TO LUGG CPT #2
S P 10	SPARE-RJB TO LUGG CPT #1
S P 11	SPARE-FJB TO RJB
S P 12	SPARE-RJB TO ENGINE
S P 13	SPARE-RJB TO ENGINE
S P 14	SPARE-FJB TO RJB
S P 15	SPARE-RJB TO ENGINE
S P 16	SPARE-RJB TO ENGINE

No.	DESCRIPTION
S P 17	SPARE-RJB TO ENGINE
S P 18	SPARE-FJB TO RJB
S P 24	SPARE-RJB TO LAVATORY ROOF
S P 25	SPARE-RJB TO LAVATORY ROOF
S P 26	SPARE-RJB TO LAVATORY ROOF
S P 27	SPARE-RJB TO LH HAT RACK
S P 28	SPARE-RJB TO LH HAT RACK
S P 31	SPARE-RJB TO RH HAT RACK
S P 32	SPARE-RJB TO RH HAT RACK
S P 33	SPARE-FJB TO RJB
S P 38	SPARE-FJB TO RJB
S P 43	SPARE-FJB TO RJB
S P 45	SPARE-FJB TO RJB
S P 46	SPARE-RJB TO LH FR ROOF
S P 48	SPARE-RJB TO DASH CENTER PANEL
S P 56	SPARE-ENGINE TO RH SW PANEL
S P 57	SPARE-DASH CENTER PANEL TO ENG.
S P 58	SPARE-DASH CENTER PANEL TO ENG.
S P 59	SPARE-FJB TO ENGINE
S P 61	SPARE-FJB TO DASH RH PANEL
S P 68	SPARE-FJB TO ENGINE
S P 69	SPARE-FJB TO FR AXLE
S P 70	SPARE-FJB TO FR AXLE
S P 71	SPARE-FJB TO RH SW PANEL
S P 72	SPARE-FJB TO FR SERV CPT
S P 74	SPARE-FJB TO LH CONSOLE
S P 77	SPARE-FJB TO EVAPORATOR CPT
S P 78	SPARE-FJB TO CONDENSER CPT
S P 79	SPARE-FJB TO CONDENSER CPT
S P 87	SPARE-RJB TO LH HAT RACK
S P 88	SPARE-RJB TO RH HAT RACK
S P 92	SPARE-RJB TO CONDENSER CPT
S P 93	SPARE-RJB TO EVAPORATOR CPT
S P 94	SPARE-RJB TO RR ROOF
S P 95	SPARE-RJB TO RR ROOF
S P 96	SPARE-RJB TO LUGG CPT #2
S P 97	SPARE-RJB TO LUGG CPT #3
S P 98	SPARE-RJB TO LUGG CPT #3
S P 104	SPARE-RJB TO ENGINE CPT
S P 105	SPARE-FJB TO ENGINE
S P 106	SPARE-RJB TO BATT. CPT.
S P 107	SPARE-RJB TO BATT. CPT.
S P 108	SPARE-RJB TO BATT. CPT.
S P 109	SPARE-RJB TO ENGINE CPT.
S P 110	SPARE-RJB TO ENGINE CPT.
S P 111	SPARE-RJB TO ENGINE CPT.
S P 112	SPARE-RJB TO ENGINE CPT.
S P 114	SPARE-FJB TO U/DASH WIPER
S P 115	SPARE-FJB TO U/DASH WIPER
S P 116	SPARE-FJB TO U/DASH FLOOR

No.	DESCRIPTION
S P 117	SPARE-FJB TO U/DASH FLOOR
S P 119	SPARE-RJB TO ENGINE CPT.
SPZ 1	SPARE WIRE-ZF TRANSM.
SPZ 2	SPARE WIRE-ZF TRANSM.
SPZ 3	SPARE WIRE-ZF TRANSM.
SPZ 4	SPARE WIRE-ZF TRANSM.
SPZ 5	SPARE WIRE-ZF TRANSM.
SPZ 6	SPARE WIRE-ZF TRANSM.
W C	A/C & HEAT SYST-EVAP CTR SIGN
Y C	INTERIOR LTS-110V FLUORESCENT
Y D	INTERIOR LTS-110V FLUORESCENT
0	BC - BAT. CPT CHASSIS GRD
0	CONDENSER CPT GRD
0	RS - RR JCT BOX RLY GRD
0	GALLEY GRD
0 A	BC - SHIELD GRD
0 A	RS - RR JCT BOX RLY GRD
0 A	FRS - FR ROOF ACCES. GRD
0 A	RS - LUG. CPT ACCES. GRD
0 A	A/C SYSTEM-EVAP. GRD
0 A A	RS - VOLTAGE REGULATOR GRD
0 B 1	EC – RR JCT PANEL GRD
0 B	EC - ENGINE GRD
0 B	FRS - FR ROOF HEAT WIND GRD
0 B	RS - LUG. CPT ACCES. GRD
0 B E	RJB - BAT. EQUAL. BAT GRD
0 C	EC - STARTER MOTOR GRD
0 C	FS - SERV. CPT ACCES. GRD
0 C	BC - FAN EVAP. & CONDENSER GRD
0 C R	24V DISC. SW. RLY GRD SIGNAL
0 C S	24V DISC. SW. RLY GRD SIGNAL
0 C 1	FS - SERV. CPT ACCES. GRD
0 C 2	FS - SERV. CPT ACCES. GRD
0 C 3	FS - SERV. CPT ACCES. GRD
0 C 4	FS - FJB CPT ACCES. GRD
0 D	BC - FAN CONDENSER GRD
0 D	RS - HAT RACK ACCES. LH GRD
0 D	RJB – IGNITION RELAY
0 D F	RS - RR SIDE FLASH & MARK GRD
0 D R	RS - RJB DOCKING LT RESISTORS
0 E	RS - HAT RACK ACCES. LH GRD
0 E A	EATON TRANSMISSION GRD
0 F	RS - HAT RACK ACCES. RH GRD
0 G	RS - HAT RACK ACCES. RH GRD
0 H	RS - LAVATORY ACCES. GRD
0 J	FS - LH CONSOLE SW GRD
0 J	RS - RR ROOF ACCES. GRD
0 K	RS - RR ROOF ACCES. GRD
0 K	RS - RJB A/C JCT PANEL GRD
0 L	FS - FR SERVICE CPT LTS GRD

No.	DESCRIPTION
0 L 1	FS - FR SERVICE CPT LTS GRD
0 L 2	FS - FR SERVICE CPT LTS GRD
0 L 3	FS - FJB GRD
0 L 4	FS - FJB GRD
0 L 5	FS - CIGAR LIGHTER
0 L 6	FS - FRONT SERVICE CPT LTS GRD
0 L	RS - ENGINE CPT ACCES. GRD
0 L	ENTRANCE DOOR (SEDAN) GRD
0 L H	RS - RR END LAMPS LH GRD
0 M	FS - ELECTRICAL MOTOR GRD
0 M 1	FS - ELECTRICAL MOTOR GRD
0 M 3	FS - ELECTRICAL MOTOR GRD
0 M 4	FS - ELECTRICAL MOTOR GRD
0 M 5	FS - ELECTRICAL MOTOR GRD
0 M 6	FS - FJB GRD
0 M 7	FS - ELECTRICAL MOTOR GRD
0 M	RS - ENGINE CPT ACCES. GRD
0 M R	24V DISC. SW. RLY GRD SIGNAL
0 M S	24V DISC. SW. RLY GRD SIGNAL
0 N	RS - ENGINE CPT ACCES. GRD
0 P	RS - ENGINE CPT ACCES. GRD
0 R	FS - SOUND SYS. JCT PANEL GRD
0 R	RS - RJB GRD
0 R	RS - ENGINE CPT ACCES. GRD
0 R E	RADIO &CTRL HEAD CHASSIS GRD
0 R H	RS - RR END LAMPS RH GRD
0 S	12 VOLT RUN - GND RELAY
0 S A	EC-BOSCH ALT. GROUND
0 S 2	SOUND SYSTEM RADIO GRD
0 S 3	SOUND SYSTEM VIDEO GRD
0 S S	SOUNS SYSTEM BATT. GRD
0 T	FS - DASH ACCES. GRD
0 T 1	FS - DASH ACCES. GRD
0 T 2	FS - DASH ACCES. GRD
0 T 3	FS - DASH ACCES. GRD
0 T 4	FS - DASH ACCES. GRD
0 T 5	FS - HVAC DASH MODULE. GRD
O T 6	FS - HVAC DASH MODULE. GRD
0 V	RR JCT BOX CPT GRD STUD
0 V A	BATTERY TO EQUALISER 0V
0 W	FS - WT GND & SHIELD
0 W	RS - RR JCT BOX (WCL) GRD
0 W C	RS - RR JCT BOX GRD (WCL)
0 X	RS - RR JCT BOX GRD
0 Y	ABS FR JCT BOX CPT GRD STUD
0 Y	RR JCT BOX GRD
0 Y 1	ABS SYSTEM - GRD
0 Y 2	ABS SYSTEM - GRD
0 Y 3	ABS SYSTEM - GRD
0 Y 4	ABS SYSTEM - GRD

CIRCUIT NUMBER CODE

No.	DESCRIPTION
0 Y 5	ABS SYSTEM - GRD
0 Y 6	ABS SYSTEM - GRD
0 Z	RR JCT BOX CPT GRD STUD
0 Z 0	RR JCT BOX CPT GRD STUD
0Z 1	ZF TRANSM. GRD
0Z 2	ZF TRANSM. GRD
0 0	FJB & RJB BATT. GRD
0 0 A	FBG - T.T.LT. MODULES BATT. GRD
0 0 Y	FS - ABS MODULLE BATT. GRD
0 0 S S	SOUND SYSTEM BATT. GRD
1	TACHO SYSTEM - RPM SIGNAL +
2 B	A/C & HEAT SYSTEM-COOL SIGN
2 E	A/C & HEAT SYSTEM EVAP CONT
2 F	A/C & HEAT SYSTEM EVAP CONT
4	HOSTESS & PASSENGER CHIME
4 A	HOSTESS & PASSENGER CHIME
4 B	PASSENGER CHIME
4 C	HOSTESS CHIME
5	INTERIOR LTS-AISLE & EMERG. EXIT
5	UPPER WINDSHIELD DEFROSTER
5 D	UPPER WINDSHIELD DEFROSTER
5 E	UPPER WINDSHIELD DEFROSTER
5 N	INTERIOR LTS-EMERGENCY EXIT
5 N C	SPEED SIGNAL LOWER 5MPH
5 N O	SPEED SIGNAL HIGHER 5MPH
6	INTERIOR LTS-AISLE
7 B	ENTRANCE DOOR (SEDAN)
7 D	ENTRANCE DOOR (SEDAN)
7 D A	ENTRANCE DOOR (SEDAN)
9	INTERIOR LTS-ENGINE CPT
9 A	INTERIOR LTS-ENGINE CPT
9 B	INTERIOR LTS-ENGINE CPT
9 E	INTERIOR LTS-FR SERVICE CPT
9 F	INTERIOR LTS-FR SERVICE CPT
1 0	INTERIOR LTS-LUGGAGE CPT
1 0 A	INTERIOR LTS-LUGGAGE CPT
1 0 B	INTERIOR LTS-LUGGAGE CPT
1 0 D	INTERIOR LTS-LUGGAGE CPT
1 0 F	INTERIOR LTS-LUGGAGE CPT
1 0 H	INTERIOR LTS-LUGGAGE CPT
1 0 K	INTERIOR LTS-LUGGAGE CPT
1 0 R	INTERIOR LTS-LUGGAGE DOOR AJAR
1 1	FR DESTINATION SIGN
1 1 A	FR DESTINATION SIGN
1 1 B	FR DESTINATION SIGN
1 1 C	FR DESTINATION SIGN
1 1 D	FR DESTINATION SIGN
1 1 E	FR DESTINATION SIGN
1 1 K	FR DESTINATION SIGN
1 2	12V BAT ELECTRONIC JCT BLOCK

No.	DESCRIPTION
1 2	BAT CPT 12V BATTERY
1 2 A	FR JCT BOX 12V DISC SW
1 2 A	RR JCT BOX 12V DISC SW
1 2 B	12V BAT ELECTRICAL JCT BLOCK
1 2 B	RR JCT BOX 12V DISC SW
1 2 B	FR JCT BOX 12V DISC SW
1 2 B E	BAT. EQUALIZER MONITOR
1 2 C	FR JCT BOX 12V DISC SW
1 2 C	RR JCT BOX 12V HOT WIRE
1 2 C E	RR JCT BOX 12V HOT WIRE
1 2 D	BAT CPT 12V BATTERY
1 2 D A	12V IGNITION DISTRIBUTION
1 2 D T	TTLT MODULE
1 2 D Z	ZF TRANSM. HOTWIRE
1 2 E	FR JCT BOX 12V DISC SW
1 2 E	RR JCT BOX 12V DISC SW
1 2 F	BAT CPT 12V FJB & IC
1 2 F	FR JCT BOX 12V DISC SW
1 2 G	FR JCT BOX 12V DISC SW
1 2 H	12 V IGNITION D.T.RUN LIGHT
1 2 J	FR JCT BOX 12V DISC SW
1 2 I	12V IGNITION DISTRIBUTION
1 2 I	RR JCT BOX 12V IGNITION
1 2 K	12 VOLT IGN. TTLT & HVAC MODULE
1 2 I A	12V IGNITION DISTRIBUTION
1 2 I A	FR JCT BOX 12V IGNITION
1 2 I B	FR JCT BOX 12V IGNITION
1 2 I E	ABS-FR JCT BOX 12V IGNITION
1 2 I F	FR JCT BOX 12V IGNITION
1 2 I Z	12 V IGNITION FOR ZF TRANSM.
1 2 L X	CLUSTER (12V HOT WIRE)
1 2 M	ABS-FR JCT BOX 12V DISC. SW.
1 2 P	LH CONSOLE POWER OUTLET
1 2 R	BAT CPT 12V DISC RLY TO RJB
1 2 R	MEMORY BATTERY RADIO
1 2 S	SOUND SYSTEM 12V RADIO
1 2 S 1	SOUND SYSTEM 12V RADIO
1 2 S 1 A	DVD KARAOKE FEEDING
1 2 S 2	SOUND SYSTEM 12V RADIO
1 2 S 2 A	DVD KARAOKE FEEDING
1 2 S B	SOUND SYSTEM 12V FEEDING
1 2 S S	SOUND SYSTEM 12V FEEDING
1 2 V	RR JCT BOX 12V DISC SW
1 2 V A	BATTERY TO EQUALIZER 12V
1 2 V D	12V HOT WIRE DISTRIBUTION
1 2 V F	BAT CPT 12V FJB & IC
1 2 V I	12V IGNITION DISTRIBUTION
1 2 V R	BAT CPT 12V DISC RLY TO RJB
1 2 W	12V BATTERY DDEC III
1 2 W	ENTRANCE DOOR (SEDAN)

No.	DESCRIPTION
1 2 W A	ENTRANCE DOOR (SEDAN)
1 2 W B	ENTRANCE DOOR (SEDAN)
1 2 X	FR JCT BOX 12V DISC SW
1 2 X 2	FR JCT BOX 12V DISC SW
1 2 Y	FR JCT BOX 12V DISC SW
1 3 A	ALARM & SIGNAL-LO AIR PRIM.
1 3 B	ALARM & SIGNAL-LO AIR SEC.
1 4	LAVATORY-FLUSHING PUMP
1 4 A	LAVATORY-FLUSHING PUMP
1 4 P	LAVATORY-FLUSHING PUMP
1 5	EXTERIOR LTS-MULTI FUNC LEVEL
1 5 A	WIPER & WASHER UPPER WINDSHIELD
1 6	SPEED - SIGNAL +
1 6 A	SPEED - SIGNAL +
1 6 T	SPEED - SIGNAL +
1 7	EXTERIOR LTS-FLASHER UNIT
1 7 A	EXTERIOR LTS-FLASHER UNIT
1 9	DIFFERENTIAL OIL TEMP
2 0	SPEED - SIGNAL -
2 0 T	SPEED - SIGNAL -
2 0 W	SPEED - SIGNAL -
2 1	EXTERIOR LTS-DIRECTIONAL LH
2 1 A	EXTERIOR LTS-DIRECTIONAL LH
2 1 B	EXTERIOR LTS-HAZARD
2 1 C	EXTERIOR LTS-CORNERING LH
2 1 H	EXTERIOR LTS-DIRECTIONAL LH
2 1 K	EXTERIOR LTS-CORNERING
2 1 N	EXTERIOR LTS-CORNERING LH
2 1 P	EXTERIOR LTS-CORNERING LH
2 3	EXTERIOR LTS-DIRECTIONAL RH
2 3	EXTERIOR LTS-DIRECTIONAL RH
2 3 A	EXTERIOR LTS-DIRECTIONAL RH
2 3 B	EXTERIOR LTS-DIRECTIONAL RH
2 3 C	EXTERIOR LTS-CORNERING RH
2 3 N	EXTERIOR LTS-CORNERING RH
2 3 P	EXTERIOR LTS-CORNERING RH
2 4	BAT CPT 24V BATTERY
2 4	FR JCT BOX 24V DISC SW
2 4 A	BOOSTER BLOCK 24V DISC SW
2 4 A	FR JCT BOX 24V DISC SW
2 4 A	RR JCT BOX 24V DISC SW
2 4 B	24V STARTER RLY FEEDING
2 4 B	FR JCT BOX 24V DISC SW
2 4 B A	RR JCT BOX 24V DISC SW
2 4 B C	24 VOLT BATT. CHARGER
2 4 B E	RJB CPT-BAT EQ MONITOR HOT WIRE
2 4 C	FR JCT BOX 24V DISC SW
2 4 C	RR JCT BOX 24V DISC SW
2 4 D	BAT CPT 24V HOT WIRE
2 4 D	FR JCT BOX 24V HOT WIRE

No.	DESCRIPTION
2 4 D	RR JCT BOX 24V HOT WIRE
2 4 D A	A/C JCT BOX 24V HOT WIRE
2 4 D Z	24 V HOT WIRE FOR ZF TRANSM.
2 4 E	BAT CPT 24V DISC SW
2 4 E	FR JCT BOX 24V DISC SW
2 4 E	RR JCT BOX 24V DISC SW
2 4 F	FR JCT BOX 24V DISC SW
2 4 F	RR JCT BOX 24V DISC SW
2 4 G	FR JCT BOX 24V DISC SW
2 4 G	RR JCT BOX 24V DISC SW
2 4 H	FR JCT BOX 24V DISC SW
2 4 H	RR JCT BOX 24V DISC SW
2 4 I	FR JCT BOX 24V IGNITION
2 4 I	RR JCT BOX 24V IGNITION
2 4 I A	FR JCT BOX 24V IGNITION
2 4 I B	FR JCT BOX 24V IGNITION
2 4 I B	RR JCT BOX 24V IGNITION
2 4 I C	FR JCT BOX 24V IGNITION
2 4 I C	RR JCT BOX 24V IGNITION
2 4 I F	FJB 24VOLT IGNITION
2 4 I Z	ZF TANSM. IGNITION
2 4 P	FR JCT BOX 24V DISC SW
2 4 S	24V DISC SW RLY SIGNAL
2 4 S 1	SOUND SYSTEM 24V AMPLIFIER
2 4 S 2	SOUND SYSTEM 24V AMPLIFIER
2 4 S 3	SOUND SYSTEM 24V VIDEO
2 4 S 4	SOUND SYSTEM 24V VIDEO
2 4 S B	SOUND SYSTEM 24V FEEDING
2 4 S S	SOUND SYSTEM 24V FEEDING
2 4 R	24 VOLTS FRONT CAMERA SW.
2 4 V 2	RR JCT BOX 24V DISC SW
2 4 V 3	RR JCT BOX 24V DISC SW
2 4 V 4	RR JCT BOX 24V DISC SW
2 4 V 5	RR JCT BOX 24V DISC SW
2 4 V D	24V HOT WIRE RR JCT BOX
2 4 V F	BAT CPT 24V SW TO FJB & IC
2 4 V A	BATTERY TO EQUALIZER 24V
2 4 V I	RR JCT BOX 24V IGNITION
2 4 V R	BAT CPT 24V DISC SW TO RJB
2 4 W	RR JCT BOX 24V DISC SW (WCL)
2 4 W C	BATT.CPT TO HYD. PUMP (WCL)
2 4 W L	24V BATTERY-HYD. PUMP (WCL)
2 4 Z Z	24 VOLT - ZF TRANSM. POWER
2 5	24 VOLT ALT.SIGNAL MODULE
2 5 A 1	PRE-EXITATION ALT. BOSCH #1
2 5 A 2	PRE-EXITATION ALT. BOSCH #2
2 5 A	T.T. LT. ALTERNATOR #1
2 5 B	12 VOLTS IGN. ALT. SIGNAL MODULE
2 5 D	12 V. ENGINE RUN / HVAC SYSTEM
2 5 E	USE ON VIP ONLY

CIRCUIT NUMBER CODE

No.	DESCRIPTION
2 5 F	12 VOLT IGN. DISTRIBUTION
2 5 H	24 VOLT IGN. ALT. BOSCH
2 5 K	T.T. LT. ALTERNATOR #2
2 6 A	CIGAR LIGHTER
2 6	DRIVER'S WINDOW LIFTER
2 6 B	DRIVER'S WINDOW LIFTER
2 6 C	DRIVER'S WINDOW LIFTER
2 7	LAVATORY-EMERGENCY SONALERT
2 8 A	A/C & HEAT SYSTEM-HI PRESSURE
2 8 H	TTLT HI LO PRESS
2 8 T	TTLT HI LO PRESS
2 9	A/C & HEAT SYSTEM-DRIVER'S HTR
2 9 A	A/C & HEAT SYSTEM-DRIVER'S HTR
2 9 B	A/C & HEAT SYSTEM-DRIVER'S HTR
2 9 H	HVAC DASH MODULE
3 0 A	GALLEY
3 1 A	A/C & HEAT SYSTEM-UNLOADER
3 1 B	A/C & HEAT SYSTEM-UNLOADER
3 1 B	WIPER & WASHER SYSTEM
3 1 C	WIPER & WASHER SYSTEM
3 1 D	WIPER & WASHER SYSTEM
3 1 E	WIPER & WASHER SYSTEM
3 1 J	WIPER & WASHER SYSTEM
3 1 X	WIPER & WASHER SYSTEM
3 2	EXTERIOR LTS-BACK-UP
3 2 B	EXTERIOR LTS-BACK-UP
3 2 C	BACK-UP PWR & SIGNAL
3 2 D	BACK-UP ALARM
3 5	ENTRANCE DOOR (SEDAN)
3 5 B	ENTRANCE DOOR (SEDAN)
3 5 B B	ENTRANCE DOOR (SEDAN)
3 5 D	ENTRANCE DOOR (SEDAN)
3 6	JACOB BRAKE SYSREM
3 6 A	JACOB BRAKE SYSREM
3 8	INTERIOR LTS-24V FLUORESCENT
3 8 A	INTERIOR LTS-24V FLUORESCENT
3 8 C	INTERIOR LTS-24V FLUORESCENT
3 8 D	INTERIOR LTS-24V FLUORESCENT
3 9	INTERIOR LTS-24V LH CONSOLE SW
3 9 A	INTERIOR LTS-DRIVER"S LTS
3 9 P	READING LIGHTS
4 1	A/C & HEAT SYSTEM-COND FAN MOT
4 1 A	A/C & HEAT SYSTEM-COND FAN MOT
4 1 B	A/C & HEAT SYSTEM-COND FAN MOT
4 2	A/C & HEAT SYSTEM-COND FAN MOT
4 2 A	A/C & HEAT SYSTEM-COND FAN MOT
4 3	HAT RACK FAN
4 3 A	HAT RACK FAN
4 3 B	HAT RACK FAN
4 3 D	HAT RACK FAN

No.	DESCRIPTION
4 3 E	HAT RACK FAN
4 3 F	HAT RACK FAN
4 3 G	HAT RACK FAN
4 4	EXTERIOR LTS-FOG
4 4 A	EXTERIOR LTS-FOG
4 4 B	EXTERIOR LTS-FOG
4 4 C	EXTERIOR LTS-FOG & HAZARD
4 5 A	A/C & HEAT SYSTEM-FULL AIR
4 5 B	A/C & HEAT SYSTEM-WATER PUMP
4 5 C	A/C & HEAT SYSTEM-WATER VALVE
4 5 D	A/C & HEAT SYSTEM-WATER VALVE
4 5 E	A/C & HEAT SYSTEM-HEAT 1 SIGN
4 5 G	A/C & HEAT SYSTEM-DRIVER'S HTR
4 5 H	A/C & HEAT SYSTEM-DRIVER'S HTR
4 5 W	A/C & HEAT SYSTEM-COND. DOOR AJAR
4 6	EXTERIOR LTS-MARKER
4 6 A	EXTERIOR LTS-MARKER
4 6 B	EXTERIOR LTS-MARKER
4 6 B	EXTERIOR LTS-MARKER
4 6 C	EXTERIOR LTS-MARKER
4 7	A/C & HEAT SYSTEM-DRIVER'S HTR
4 8	ENTRANCE DOOR (SEDAN)
4 8 A	ENTRANCE DOOR (SEDAN)
4 9	ENTRANCE DOOR (SEDAN)
4 9 A	ENTRANCE DOOR (SEDAN)
5 2	ALARM & SIGNAL-ELEC. HORN
5 2 A	ALARM & SIGNAL-ELEC. HORN
5 2 B	ALARM & SIGNAL- AIR HORN
5 2 C	ALARM & SIGNAL- AIR HORN
5 3	ALARM & SIGNAL-ELEC. HORN
5 3 A	WIPER & WASHER SYSTEM
5 3 B	WIPER & WASHER SYSTEM
5 3 C	WIPER & WASHER SYSTEM
5 3 E	WIPER & WASHER SYSTEM
5 3 J	WIPER & WASHER SYSTEM
5 5	EXTERIOR LTS-HI BEAM
5 7	EXTERIOR LTS-HI BEAM
5 7 A	A/C & HEAT SYSTEM-WATER PUMP
5 7 A	EXTERIOR LTS-HI BEAM
5 7 B	A/C & HEAT SYSTEM-WATER PUMP
5 7 C	PRE-HEAT WATER HEATER
5 8	EXTERIOR LTS-LO BEAM
5 8 A	EXTERIOR LTS-LO BEAM
5 8 B	EXTERIOR LTS-LO BEAM
5 8 E	EXTERIOR LTS-LO BEAM
5 9 A	JACOB BRAKE SYSTEM
6 1	EXTERIOR LTS-24V FEED SW
6 1 A	EXTERIOR LTS-HEAD SIGNAL
6 2	LAVATORY-OCCUPIED LT

No.	DESCRIPTION
6 2 A	LAVATORY-FLUOR LT
6 2 B	LAVATORY-FLUOR LT
6 2 E	LAVATORY-OCCUP & FLUOR LT
6 3	EXTERIOR LTS-CLEARANCE
6 3 A	EXTERIOR LTS-CLEARANCE
6 3 B	EXTERIOR LTS-CLEARANCE
6 3 C	EXTERIOR LTS-MARKER SIGNAL
6 3 D	EXTERIOR LTS-MARKER & TAIL
6 3 E	EXTERIOR LTS-CLEARANCE
6 3 F	EXTERIOR LTS-MARKER BLINKER
6 3 H	EXTERIOR LTS-TAIL
6 4	DRIVERS FAN
6 4 B	DRIVERS FAN
6 4 C	DRIVERS FAN
6 5	FOOT DAMPER MOTOR
6 5 A	FOOT DAMPER MOTOR
6 5 D	DRIVER REC. DAMPER
6 6	O_PASS. ON/OFF
6 7	24 VOLT RUN DISTRIBUTION
6 7 A	A/C & HEAT SYSTEM
6 7 C	HEATING WINDSHIELD
6 7 K	A/C & HEAT SYSTEM-COND FAN CTR
6 7 L	A/C & HEAT SYSTEM-COND FAN CTR
6 7 X	A/C & HEAT SYSTEM
6 8	DASH & DEFROST DAMPER MOTOR
6 8 A	DASH & DEFROST DAMPER MOTOR
7 0	INTERIOR LTS-HAT RACK & RR RUN.
7 2	SUN VISOR-FEEDING
7 2 A	SUN VISOR-RH
7 2 B	SUN VISOR-RH
7 2 C	SUN VISOR-LH
7 2 D	SUN VISOR-LH
7 3	LAVATORY-FEEDING
7 4	INTERIOR LTS-READING RH
7 4 A	INTERIOR LTS-READING RH
7 4 D	INTERIOR LTS-READING SIGNAL
7 5	INTERIOR LTS-READING LH
7 5 A	INTERIOR LTS-READING LH
7 6	FUEL TANK GAUGE
7 6 B	LOW FUEL LT & ETHER COLD START
7 6 C	LOW FUEL LT
7 6 P	FUEL PRIME PUMP
7 6 M	FUEL PRIME PUMP
7 7 B	A/C & HEAT SYSTEM-COMPRESSOR
7 7 C	A/C & HEAT SYSTEM-COMPRESSOR
7 7 H	A/C & HEAT SYSTEM-COMPRESSOR
8 1	EXTERIOR LTS-STOP SW
8 2	EXTERIOR LTS-STOP SIGNAL
8 2 A	EXTERIOR LTS-STOP SIGNAL
8 2 B	EXTERIOR LTS-STOP LTS

No.	DESCRIPTION
8 2 K	EXTERIOR LTS-STOP PARK BRK
8 2 L	EXTERIOR LTS-LH STOP
8 2 R	EXTERIOR LTS-LH STOP
8 3	ENGINE CTR-KEY SW ACCES SIGN
8 4	ENGINE CTR-KEY SW ACCES SIGN
8 5	ENGINE CTR-KEY SWIGNITION SIGN
8 5	24V IGNITION SIGNAL
8 5 A	24V IGN DASH INSTRUMENTATION
8 5 B	ENGINE CTR-24V IGNITION
8 5 C	PARKING BRAKE SWITCH
8 5 E	STOP LIGHT RLY
8 5 F	ENGINE CTR-ENGINE CTR SW IGN
8 5 F	LO AIR SONALERT
8 5 G	RADIATOR FAN CLUTCH
8 5 X	12V IGN ABS
8 5 Y	ABS SYSTEM
8 6	ENGINE CTR-STARTER SOL SIGN
8 6 A	ENGINE CTR-STARTER SOL SIGN
8 6 F	ENGINE CTR-STARTER TTLT SIGN
8 6 T	ENGINE CTR-STARTER TTLT SIGN
8 8	ENGINE CTR-RR START SIGNAL
8 9	ENGINE CTR-RR START SIGNAL
9 0 B	A/C & HEAT SYSTEM-COND FAN MOT
9 0 B	ENGINE CTR-MAST KEY SW FEED
9 0 C	A/C & HEAT SYSTEM-COND FAN MOT
9 0 F	CHARG SYST-VOLTAGE REGUL. "B"
9 0 H	A/C & HEAT SYSTEM-EVAP FAN MOT
9 1	PARKING BRAKE SW SIGNAL
9 1 A	DDEC-FAST IDLE SIGNAL
9 1 S	SONALERT PARKING BRAKE
9 1 W	PARK, BRAKE SW SIGN (WCL)
9 2	BATTERY EQUALIZER-CHECK BALANCE
9 3	BATTERY EQUALIZER-CHECK LO/HI
9 5 A	ENGINE BRAKE & RETARDER SYSTEM
9 7	TACHOMETER (-)
1 0 0	INTERIOR LTS-GENERAL
1 0 0 A	INTERIOR LTS-GENERAL
1 0 0 B	INTERIOR LTS-GENERAL
1 0 1	24V STARTER SOL FEEDING
1 0 1	WORLD TRANSM-LO SIGN SOL. LO
1 0 2	WORLD TRANSM-SOL. SUPPLY
1 0 2 A	24V STARTER TO BOSCH ALTERNATOR
1 0 3	LOW BUOY
1 0 4	WORLD TRANSM-SOL. FORWARD
1 0 5	WORLD TRANSM-RETARDER & SUMP
1 0 5 W	WORLD TRANSM-RETARDER & SUMP
1 0 6	WORLD TRANSM-OIL LEVEL HI
1 0 7	WORLD TRANSM-LOCKUP SOL. HI
1 0 8	WORLD TRANSM-REM. PWR WAKE UP
1 0 9	WORLD TRANSM-RET. SOL. LO

CIRCUIT NUMBER CODE

No.	DESCRIPTION
110	ALARM & SIGNAL-WATER TEMP
110	WORLD TRANSM-LOCKUP SOL. LO
111	WORLD TRANSM-SOL. C6
112	WORLD TRANSM-SPARE OUTPUT (+)
113	ALARM & SIGNAL-OIL PRESS
113	WORLD TRANSM-REVERSE WARNING
113W	WORLD TR.-REVERSE WARNING
113Z	ZF TRANSM.- REVERSE SIGNAL
114	INTERIOR LTS-DASH LT REGUL.
114	WORLD TRANSM-SPARE OUTPUT (-)
114A	INTERIOR LTS-DASH LT
114B	INTERIOR LTS-DASH LT REGUL.
114D	INTERIOR LTS-DASH LT REGUL.
114E	INTERIOR LTS-DASH LT REGUL.
115	ALARM & SIGNAL-TAG PRESS
115	DDEC III-COOLANT LEVEL
115	WORLD TRANSM-DO NOT SHIFT SIGN
115C	DDEC III-COOLANT LEVEL
115W	WORLD TRANSM-DO NOT SHIFT SIGN
115W	ZF TRANSM. - CHECK TRANSM. TTLT
116	WORLD TRANSM-LO SIGNAL SOL. HI
116B	A/C & HEAT SYSTEM-DRIVER'S HTR
117	WORLD TRANSM-SPARE INPUT (-)
117A	ALARM & SIGNAL-TRANSM OIL TEMP
117A	ALARM & SIGNAL-TRANSM OIL TEMP
118	WORLD TRANSM-SPARE INPUT (+)
119	WORLD TRANSM-ENG BRK INPUT (+)
120	WORLD TRANSM-SOL. C1
121	WORLD TRANSM-SOL. GRD 2
122	A/C & HEAT SYSTEM-DRIVER'S HTR
122	A/C & HEAT SYSTEM-FRESH AIR
122	WORLD TRANSM-SOL. GRD 4
122A	A/C & HEAT SYSTEM-FRESH AIR
123	WORLD TRANSM-NEUTRAL START
123A	ALARM & SIGNAL-FIRE DETECTOR
123B	ALARM & SIGNAL-FIRE DETECTOR
124	WORLD TRANSM-THROTTLE (HI)
125	WORLD TRANSM-RET. INDICATOR
125	GALLEY LAMP
125T	GALLEY LAMP
125W	WORLD TRANSM-RET. INDICATOR
126	KNEELING SYSTEM
126A	KNEELING SYSTEM
126B	KNEELING SYSTEM
126C	KNEELING SYSTEM
126D	KNEELING SYSTEM
126E	KNEELING SYSTEM
126F	KNEELING SYSTEM
126G	KNEELING SYSTEM
126H	KNEELING SYSTEM

No.	DESCRIPTION
126K	KNEELING SYSTEM
126P	KNEELING SYSTEM
126R	KNEELING SYSTEM
126W	5 MPH N.C. SIGNAL (WCL)
126S	KNEELING SYSTEM
126T	KNEELING SYSTEM
127	WORLD TRANSM-LUBE PRESS SW.
127	WORLD TRANSM-RETARDER FEED SOL.
127	POWER- PRE-HEAT WATER HEATER
127A	PRE-HEAT WATER HEATER
128A	PRE-HEAT WATER HEATER
128B	PRE-HEAT - BURNER ON SIGNAL
128	WORLD TRANSM-SOL. C2
129	POWER- PRE-HEAT WATER HEATER
129B	POWER- PRE-HEAT WATER HEATER
129	WORLD TRANSM-SOL. C5
130	A/C & HEAT SYSTEM-EVAP FAN MOTOR
130	WORLD TRANSM-SOL. GRD 3
131	WORLD TRANSM-SOL. C4
132	WORLD TRANSM-ENG BRK OUTPUT (-)
132W	WORLD TRANSM-ENG BRK OUTPUT (-)
133	GALLEY-HEAT CONTAINERS
133A	GALLEY-HEAT CONTAINERS
133B	GALLEY-HEAT CONTAINERS
133C	GALLEY-HEAT CONTAINERS
133	WORLD TRANSM-RET. ACTUATOR HI
134	GALLEY-HEAT CONTAINERS
134A	GALLEY-HEAT CONTAINERS
134	WORLD TRANSM-RET. APPLY SOL. HI
135	A/C & HEAT SYSTEM-AIR SENSOR
135A	A/C & HEAT SYSTEM-AIR SENSOR
135	WORLD TRANSM-ANALOG GRD
135D	WORLD TRANSM-RETARDER RES MOD
135C	WORLD TRANSM-RETARDER TEMP
136	GALLEY-ACCESSORIES
136	WORLD TRANSM-ECU POWER
136V	WORLD TRANSM-12V BATTERY
136W	WORLD TRANSM-12V BATTERY
136X	WORLD TRANSM-12V BATTERY
137	WORLD TRANSM-RETARDER
137A	MIRROR (SPARTAN & RAMCO)
137B	RR VIEW MIRROR (SPARTAN)
137C	RR VIEW MIRROR (SPARTAN)
137D	RR VIEW MIRROR (SPARTAN)
137E	RR VIEW MIRROR (SPARTAN)
137G	RR VIEW MIRROR (SPARTAN)
138	ABS SYSTEM
138	WORLD TRANSM-RETARDER TEMP
138A	ABS SYSTEM
139	ABS SYSTEM

No.	DESCRIPTION
139	WORLD TRANSM-OUTPUT SPEED HI
140	ABS SYSTEM
140	WORLD TRANSM-OUTPUT SPEED LO
141	ABS SYSTEM
141	WORLD TRANSM-ENGINE SPEED HI
142	ABS SYSTEM
142	WORLD TRANSM-SERIAL COM. A
143	ABS SYSTEM
143	WORLD TRANSM-ECU BATTERY GRD
143A	ABS SYSTEM
143W	WORLD TRANSM-BATTERY GRD
144	ABS SYSTEM
144	WORLD TRANSM-ECU CHASSIS GRD
144A	ABS SYSTEM
145	ABS SYSTEM
146	ABS SYSTEM
146A	TRANSMISSION-12V IGNITION
146	WORLD TRANSM-IGNITION SENSE
146W	WORLD TRANSM-12V IGNITION
146X	WORLD TRANSM-12V IGNITION
147	ABS SYSTEM
147	WORLD TRANSM-OIL TEMP
147A	ETHER COLD START & D.R.L.
147C	ETHER COLD START
148	ABS SYSTEM
148	WORLD TRANSM-OUTPUT SPEED LO
149	ABS SYSTEM
149	WORLD TRANSM-TURBINE SPEED HI
149A	ABS SYSTEM
150	DDEC III-ECM BATTERY GRD
150	WORLD TRANSM-ENGINE SPEED LO
150A	DDEC III-ECM BATTERY GRD
151	ABS SYSTEM
151	DDEC III-ECM BATTERY GRD
151	WORLD TRANSM-SERIAL COM. B
152	ABS SYSTEM
153	WORLD TRANSM-SPARE INPUT (-)
154	ABS SYSTEM
154	WORLD TRANSM-ABS RET. INPUT
155	WORLD TRANSM-SPARE INPUT (-)
156	WORLD TRANSM-THROTTLE POS.
156A	ABS SYSTEM
157	WORLD TRANSM-SPEEDO SIGNAL
157B	ABS SYSTEM
157D	A.T.C. SYSTEM
157E	A.T.C. SYSTEM
157F	A.T.C. SYSTEM
158	WORLD TRANSM-DIMMER
160	ALARM & SIGNAL-TAG PRESS SW
160	WORLD TRANSM-SER. INTERFACE (-)

No.	DESCRIPTION
161	WORLD TRANSM-SIGNAL GRD
161B	WORLD TRANSM-SIGNAL GRD
162	WORLD TRANSM-PRESS. SW C3
163	WORLD TRANSM-RETARDER ENABLE
164	WORLD TRANSM-RET. ACTUATOR SIGN
165	A/C & HEAT SYSTEM-TRANSMITER
165	WORLD TRANSM-OIL LEVEL SIGNAL
166B	A/C & HEAT SYSTEM-EVAP. MOD.
167	W. TR.-OUT SPEED INTERLOCK
167Z	ZF- OUT SPEED INTERLOCK
168	A/C & HEAT SYSTEM-HUMIDISTAT
168	WORLD TRANSM-SER. INTERFACE (+)
168A	A/C & HEAT SYSTEM-HUMIDISTAT
170	LUGGAGE DOOR LOCK
170C	LUGGAGE DOOR LOCK
170E	LUGGAGE DOOR LOCK
170H	LUGGAGE DOOR LOCK
181A	THERMOMETER INSIDE SENSOR
181B	THERMOMETER INSIDE SENSOR
181C	THERMOMETER OUTSIDE SENSOR
181D	THERMOMETER OUTSIDE SENSOR
197	FUEL WATER FILTER
197A	FUEL WATER FILTER
197B	FUEL WATER FILTER
198	FILTER FUEL HEATER
199	AIR FILTER RESTRICTION SENDER
201	WORLD TRANSM-SPARE
202	WORLD TRANSM-SPARE
203	WORLD TRANSM-SPARE
204	WORLD TRANSM-SPARE
205	WORLD TRANSM-SPARE
206	WORLD TRANSM-SPARE
214	WORLD TRANSM-BACK UP SIGNAL
225	LAVATORY FAN
225A	LAVATORY FAN
231	NEUTRAL SIGNAL GRD
231A	NEUTRAL COIL RELAY FEED SIGNAL
231W	NEUTRAL SIGNAL GRD (WCL)
231Z	ZF NEUTRAL SIGNAL GRD
240	DDEC III-ECM 12V FEEDING
241	DDEC III-ECM 12V FEEDING
251A	DDEC III - DATA LOGGER 12 H.W.
251	DDEC III - PRODRIVER 12V H.W.
253	GALLEY-MICROWAVE
254	GALLEY-12V FRIGO NORCOLD
254A	GALLEY-FRIGO
255	GALLEY-COFEEMAKER
255A	GALLEY-COFEEMAKER
257	WINDSHIELD HEATED
257A	WINDSHIELD HEATED

CIRCUIT NUMBER CODE

No.	DESCRIPTION
257B	WINDSHIELD HEATED
257C	WINDSHIELD HEATED
257D	WINDSHIELD HEATED SPARE
257E	WINDSHIELD HEATED SPARE
258	WINDSHIELD HEATED
258A	WINDSHIELD HEATED
259	WINDSHIELD HEATED
259A	WINDSHIELD HEATED
260	WINDOW AJAR
290	FAN CLUTCH RADIATOR
290	FAN CLUTCH RADIATOR
291	FAN CLUTCH RADIATOR SPD 1
292	FAN CLUTCH RADIATOR SPD 2
300	DOOR AJAR MAGN.SW. (WCL)
300A	POWER SYSTEM SW. (WCL)
300B	DOOR AJAR ALARM (WCL)
301	POWER SYSTEM SW. (WCL)
302	DOOR AJAR T.T.LT. (WCL)
302A	DOOR AJAR ALARM SIGN.(WCL)
302B	DOOR AJAR MAGN.SW. (WCL)
303	REMOTE WALL SW. DWN (WCL)
304	REMOTE WALL SW. UP (WCL)
305	PARK. BRAKE SOL. VALVE (WCL)
305A	PARK. BRAKE SAFETY SW. (WCL)
305A1	DOOR AJAR - PARK. BRAKE (WCL)
306	CONTROL SYSTEM (WCL RICON)
307	CONTROL SYSTEM (WCL RICON)
308	CONTROL SYSTEM (WCL RICON)
309	CONTROL SYSTEM (WCL RICON)
310	EATON TRANSMISSION
311	EATON TRANSMISSION
312	EATON TRANSMISSION
313	EATON TRANSMISSION
314	EATON TRANSMISSION
315	EATON TRANSMISSIOM
316	EATON TRANSMISSION - EPL
317	EATON TRANSMISSION
318	EATON TRANSMISSION
319	EATON TRANSMISSION
320	EATON TRANSMISSION
321	EATON TRANSMISSION
322	EATON TRANSMISSIION
323	EATON TRANSMISSION
324	EATON TRANSMISSION
325	EATON TRANSMISSION
326	EATON TRANSMISSION
327	EATON TRANSMISSION
328	EATON TRANSMISSION
329	EATON TRANSMISSION
330	EATON TRANSMISSION - EPL

No.	DESCRIPTION
331	EATON TRANSMISSION - EPL
332	EATON TRANSMISSION
333	EATON TRANSMISSION - 12V BATTERY
334	EATON GENERATION 2
416	DDEV IV- SENSOR SUPPLY 5VDC
417	DDEC III-LIMIT SPEED GOVERNOR
419	DDEC III-CHECK ENGINE LIGHT
439	DDEC III-12V IGNITION
440	DDEC III-12V IGNITION
440A	DDEC III-12V IGNITION
451	DDEC III-A/C FAN CLUTCH
452	DDEC IV- SENSOR RETURN (ENGINE)
505	DDEC III-TACHOMETER DRIVE
509	DDEC III-STOP ENGINE LIGHT
510	DDEC III-FAST IDLE SIGNAL
524	DDEC III-ENGINE BRAKE DISABLE
524B	ZF SIGNAL – AUX. SENSOR THROTTLE
525	DDEC III-FAST IDLE SIGNAL
528	DDEC III-STOP ENG. OVERRIDE
531	DDEC III-CRUISE CLUTCH RELEASE
541	DDEC III-CRUISE SET SW
543	DDEC III-CRUISE STOP SW CUT IN
544	DDEC III-CRUISE ON/OFF SW
545	DDEC III-CRUISE RESUME SW
555	DDEC III-FAN CLUTCH SPEED# 1
556	DDEC III-VEHICLE SPEED (+)
557	DDEC III-VEHICLE SPEED (-)
563	DDEC III-FAN CLUTCH SPEED# 2
564	DDEC III-DIGITAL OUTPUT
565	DDEC III-ENGINE BRAKE ACTIVE
565Z	DECELERATION LTS
583	DDEC III-ENGINE BRAKE 4 CYL.
700	J1587(+)
701	J1587(-) – GROUND
705	ZF SIGNALS
706	ZF SIGNALS
707	ZF SIGNALS
717	ZF SIGNALS
718	ZF SIGNALS
719	ZF SIGNALS
720	ZF SIGNALS
740	EASY START VALVE
761	ZF SIGNALS

No.	DESCRIPTION
900	DDEC III-DATA LINK (+)
901	DDEC III-DATA LINK (-)
905	DDEC IV- AMBIANT AIR TEMPERATURE
908	DDEC III-HYDRAULIC PWM#1 OUTPUT
916	DDEC III-SENSOR SUPPLY (5VDC)
925	J1939-HIGH
926	J1939-LOW
927	J1939-SHIELD
952	DDEC III-SENSOR RETURN
953	DDEC III-BATTERY GRD
953A	THROTTLE INHIBIT
976	DDEC IV- RELATIVE HUMIDITY
979	DDEC III-ENGINE BRAKE 2 CYL.
988	DDEC III-CRUISE ENABLE LTS.

No.	DESCRIPTION

CIRCUIT NUMBER CODE

No.	DESCRIPTION
B A	INTERIOR LTS-110V FLUORESCENT
B B	INTERIOR LTS-110V FLUORESCENT
D 1	SOUND SYSTEM-FR RH SPEAKER
D 2	SOUND SYSTEM-FR RH SPEAKER
D 3	SOUND SYSTEM-FR RH SPEAKER
D 4	SOUND SYSTEM-RR RH SPEAKER
D 5	SOUND SYSTEM-RR RH SPEAKER
D 6	SOUND SYSTEM-RR RH SPEAKER
D 7	SOUND SYSTEM-RR RH SPEAKER
D 8	SOUND SYSTEM-RR RH SPEAKER
D 3 4	SOUND SYSTEM-RR RH SPEAKER
D 6 7	SOUND SYSTEM-RR RH SPEAKER
G 1	SOUND SYSTEM-FR LH SPEAKER
G 2	SOUND SYSTEM-FR LH SPEAKER
G 3	SOUND SYSTEM-FR LH SPEAKER
G 4	SOUND SYSTEM-RR LH SPEAKER
G 5	SOUND SYSTEM-RR LH SPEAKER
G 6	SOUND SYSTEM-RR LH SPEAKER
G 7	SOUND SYSTEM-RR LH SPEAKER
G 8	SOUND SYSTEM-RR LH SPEAKER
G 3 4	SOUND SYSTEM-RR LH SPEAKER
G 6 7	SOUND SYSTEM-RR LH SPEAKER
L 1 A	INTERIOR LTS-110V FLUORESCENT
L 1 B	INTERIOR LTS-110V FLUORESCENT
L 2 A	INTERIOR LTS-110V FLUORESCENT
L 2 B	INTERIOR LTS-110V FLUORESCENT
L 0	110V RECEPTACLE- 110V FLUOR.
L 1	110V RECEPTACLE- 110V FLUOR.
L 2	110V RECEPTACLE- 110V FLUOR.
R A	INTERIOR LTS-110V FLUORESCENT
R B	INTERIOR LTS-110V FLUORESCENT
S H 1	SHIELD CHASSIS GRD
S H 2	SHIELD CHASSIS GRD
S H 3	SHIELD CHASSIS GRD
S H 4	SHIELD CHASSIS GRD
S P 2	SPARE-FJB TO FR SERV CPT
S P 3	SPARE-FJB TO CENTER DASH
S P 4	SPARE-FJB TO CENTER DASH
S P 5	SPARE-RJB TO LUGG CPT #2
S P 6	SPARE-RJB TO LUGG CPT #1
S P 7	SPARE-RJB TO LUGG CPT #1
S P 8	SPARE-RJB TO LUGG CPT #1
S P 9	SPARE-RJB TO LUGG CPT #2
S P 10	SPARE-RJB TO LUGG CPT #1
S P 11	SPARE-FJB TO RJB
S P 12	SPARE-RJB TO ENGINE
S P 13	SPARE-RJB TO ENGINE
S P 14	SPARE-FJB TO RJB
S P 15	SPARE-RJB TO ENGINE
S P 16	SPARE-RJB TO ENGINE

No.	DESCRIPTION
S P 17	SPARE-RJB TO ENGINE
S P 18	SPARE-FJB TO RJB
S P 24	SPARE-RJB TO LAVATORY ROOF
S P 25	SPARE-RJB TO LAVATORY ROOF
S P 26	SPARE-RJB TO LAVATORY ROOF
S P 27	SPARE-RJB TO LH HAT RACK
S P 28	SPARE-RJB TO LH HAT RACK
S P 31	SPARE-RJB TO RH HAT RACK
S P 32	SPARE-RJB TO RH HAT RACK
S P 33	SPARE-FJB TO RJB
S P 38	SPARE-FJB TO RJB
S P 43	SPARE-FJB TO RJB
S P 45	SPARE-FJB TO RJB
S P 46	SPARE-RJB TO LH FR ROOF
S P 48	SPARE-RJB TO DASH CENTER PANEL
S P 56	SPARE-ENGINE TO RH SW PANEL
S P 57	SPARE-DASH CENTER PANEL TO ENG.
S P 58	SPARE-DASH CENTER PANEL TO ENG.
S P 59	SPARE-FJB TO ENGINE
S P 61	SPARE-FJB TO DASH RH PANEL
S P 68	SPARE-FJB TO ENGINE
S P 69	SPARE-FJB TO FR AXLE
S P 70	SPARE-FJB TO FR AXLE
S P 71	SPARE-FJB TO RH SW PANEL
S P 72	SPARE-FJB TO FR SERV CPT
S P 74	SPARE-FJB TO LH CONSOLE
S P 77	SPARE-FJB TO EVAPORATOR CPT
S P 78	SPARE-FJB TO CONDENSER CPT
S P 79	SPARE-FJB TO CONDENSER CPT
S P 87	SPARE-RJB TO LH HAT RACK
S P 88	SPARE-RJB TO RH HAT RACK
S P 92	SPARE-RJB TO CONDENSER CPT
S P 93	SPARE-RJB TO EVAPORATOR CPT
S P 94	SPARE-RJB TO RR ROOF
S P 95	SPARE-RJB TO RR ROOF
S P 96	SPARE-RJB TO LUGG CPT #2
S P 97	SPARE-RJB TO LUGG CPT #3
S P 98	SPARE-RJB TO LUGG CPT #3
S P 104	SPARE-RJB TO ENGINE CPT
S P 105	SPARE-FJB TO ENGINE
S P 106	SPARE-RJB TO BATT. CPT.
S P 107	SPARE-RJB TO BATT. CPT.
S P 108	SPARE-RJB TO BATT. CPT.
S P 109	SPARE-RJB TO ENGINE CPT.
S P 110	SPARE-RJB TO ENGINE CPT.
S P 111	SPARE-RJB TO ENGINE CPT.
S P 112	SPARE-RJB TO ENGINE CPT.
S P 114	SPARE-FJB TO U/DASH WIPER
S P 115	SPARE-FJB TO U/DASH WIPER
S P 116	SPARE-FJB TO U/DASH FLOOR

No.	DESCRIPTION
S P 117	SPARE-FJB TO U/DASH FLOOR
S P 119	SPARE-RJB TO ENGINE CPT.
SPZ 1	SPARE WIRE-ZF TRANSM.
SPZ 2	SPARE WIRE-ZF TRANSM.
SPZ 3	SPARE WIRE-ZF TRANSM.
SPZ 4	SPARE WIRE-ZF TRANSM.
SPZ 5	SPARE WIRE-ZF TRANSM.
SPZ 6	SPARE WIRE-ZF TRANSM.
W C	A/C & HEAT SYST-EVAP CTR SIGN
Y C	INTERIOR LTS-110V FLUORESCENT
Y D	INTERIOR LTS-110V FLUORESCENT
0	BC - BAT. CPT CHASSIS GRD
0	CONDENSER CPT GRD
0	RS - RR JCT BOX RLY GRD
0	GALLEY GRD
0 A	BC - SHIELD GRD
0 A	RS - RR JCT BOX RLY GRD
0 A	FRS - FR ROOF ACCES. GRD
0 A	RS - LUG. CPT ACCES. GRD
0 A	A/C SYSTEM-EVAP. GRD
0 A A	RS - VOLTAGE REGULATOR GRD
0 B 1	EC – RR JCT PANEL GRD
0 B	EC - ENGINE GRD
0 B	FRS - FR ROOF HEAT WIND GRD
0 B	RS - LUG. CPT ACCES. GRD
0 B E	RJB - BAT. EQUAL. BAT GRD
0 C	EC - STARTER MOTOR GRD
0 C	FS - SERV. CPT ACCES. GRD
0 C	BC - FAN EVAP. & CONDENSER GRD
0 C R	24V DISC. SW. RLY GRD SIGNAL
0 C S	24V DISC. SW. RLY GRD SIGNAL
0 C 1	FS - SERV. CPT ACCES. GRD
0 C 2	FS - SERV. CPT ACCES. GRD
0 C 3	FS - SERV. CPT ACCES. GRD
0 C 4	FS - FJB CPT ACCES. GRD
0 D	BC - FAN CONDENSER GRD
0 D	RS - HAT RACK ACCES. LH GRD
0 D	RJB – IGNITION RELAY
0 D F	RS - RR SIDE FLASH & MARK GRD
0 D R	RS - RJB DOCKING LT RESISTORS
0 E	RS - HAT RACK ACCES. LH GRD
0 E A	EATON TRANSMISSION GRD
0 F	RS - HAT RACK ACCES. RH GRD
0 G	RS - HAT RACK ACCES. RH GRD
0 H	RS - LAVATORY ACCES. GRD
0 J	FS - LH CONSOLE SW GRD
0 J	RS - RR ROOF ACCES. GRD
0 K	RS - RR ROOF ACCES. GRD
0 K	RS - RJB A/C JCT PANEL GRD
0 L	FS - FR SERVICE CPT LTS GRD

No.	DESCRIPTION
0 L 1	FS - FR SERVICE CPT LTS GRD
0 L 2	FS - FR SERVICE CPT LTS GRD
0 L 3	FS - FJB GRD
0 L 4	FS - FJB GRD
0 L 5	FS - CIGAR LIGHTER
0 L 6	FS - FRONT SERVICE CPT LTS GRD
0 L	RS - ENGINE CPT ACCES. GRD
0 L	ENTRANCE DOOR (SEDAN) GRD
0 L H	RS - RR END LAMPS LH GRD
0 M	FS - ELECTRICAL MOTOR GRD
0 M 1	FS - ELECTRICAL MOTOR GRD
0 M 3	FS - ELECTRICAL MOTOR GRD
0 M 4	FS - ELECTRICAL MOTOR GRD
0 M 5	FS - ELECTRICAL MOTOR GRD
0 M 6	FS - FJB GRD
0 M 7	FS - ELECTRICAL MOTOR GRD
0 M	RS - ENGINE CPT ACCES. GRD
0 M R	24V DISC. SW. RLY GRD SIGNAL
0 M S	24V DISC. SW. RLY GRD SIGNAL
0 N	RS - ENGINE CPT ACCES. GRD
0 P	RS - ENGINE CPT ACCES. GRD
0 R	FS - SOUND SYS. JCT PANEL GRD
0 R	RS - RJB GRD
0 R	RS - ENGINE CPT ACCES. GRD
0 R E	RADIO &CTRL HEAD CHASSIS GRD
0 R H	RS - RR END LAMPS RH GRD
0 S	12 VOLT RUN - GND RELAY
0 S A	EC-BOSCH ALT. GROUND
0 S 2	SOUND SYSTEM RADIO GRD
0 S 3	SOUND SYSTEM VIDEO GRD
0 S S	SOUNS SYSTEM BATT. GRD
0 T	FS - DASH ACCES. GRD
0 T 1	FS - DASH ACCES. GRD
0 T 2	FS - DASH ACCES. GRD
0 T 3	FS - DASH ACCES. GRD
0 T 4	FS - DASH ACCES. GRD
0 T 5	FS - HVAC DASH MODULE. GRD
O T 6	FS - HVAC DASH MODULE. GRD
O T 7	FS - DDDL GRD
0 V	RR JCT BOX CPT GRD STUD
0 V A	BATTERY TO EQUALISER 0V
0 W	FS - WT GND & SHIELD
0 W	RS - RR JCT BOX (WCL) GRD
0 W C	RS - RR JCT BOX GRD (WCL)
0 X	RS - RR JCT BOX GRD
0 Y	ABS FR JCT BOX CPT GRD STUD
0 Y	RR JCT BOX GRD
0 Y 1	ABS SYSTEM - GRD
0 Y 2	ABS SYSTEM - GRD
0 Y 3	ABS SYSTEM - GRD

CIRCUIT NUMBER CODE

No.	DESCRIPTION
0 Y 4	ABS SYSTEM - GRD
0 Y 5	ABS SYSTEM - GRD
0 Y 6	ABS SYSTEM - GRD
0 Z	RR JCT BOX CPT GRD STUD
0 Z 0	RR JCT BOX CPT GRD STUD
0Z 1	ZF TRANSM. GRD
0Z 2	ZF TRANSM. GRD
0 0	FJB & RJB BATT. GRD
0 0 A	FBG - T.T.LT. MODULES BATT. GRD
0 0 Y	FS - ABS MODULLE BATT. GRD
0 0 S S	SOUND SYSTEM BATT. GRD
1	TACHO SYSTEM - RPM SIGNAL +
2 B	A/C & HEAT SYSTEM-COOL SIGN
2 E	A/C & HEAT SYSTEM EVAP CONT
2 F	A/C & HEAT SYSTEM EVAP CONT
4	HOSTESS & PASSENGER CHIME
4 A	HOSTESS & PASSENGER CHIME
4 B	PASSENGER CHIME
4 C	HOSTESS CHIME
5	INTERIOR LTS-AISLE & EMERG. EXIT
5	UPPER WINDSHIELD DEFROSTER
5 D	UPPER WINDSHIELD DEFROSTER
5 E	UPPER WINDSHIELD DEFROSTER
5 N	INTERIOR LTS-EMERGENCY EXIT
5 N C	SPEED SIGNAL LOWER 5MPH
5 N O	SPEED SIGNAL HIGHER 5MPH
6	INTERIOR LTS-AISLE
7 B	ENTRANCE DOOR (SEDAN)
7 D	ENTRANCE DOOR (SEDAN)
7 D A	ENTRANCE DOOR (SEDAN)
9	INTERIOR LTS-ENGINE CPT
9 A	INTERIOR LTS-ENGINE CPT
9 B	INTERIOR LTS-ENGINE CPT
9 E	INTERIOR LTS-FR SERVICE CPT
9 F	INTERIOR LTS-FR SERVICE CPT
1 0	INTERIOR LTS-LUGGAGE CPT
1 0 A	INTERIOR LTS-LUGGAGE CPT
1 0 B	INTERIOR LTS-LUGGAGE CPT
1 0 D	INTERIOR LTS-LUGGAGE CPT
1 0 F	INTERIOR LTS-LUGGAGE CPT
1 0 H	INTERIOR LTS-LUGGAGE CPT
1 0 K	INTERIOR LTS-LUGGAGE CPT
1 0 R	INTERIOR LTS-LUGGAGE DOOR AJAR
1 1	FR DESTINATION SIGN
1 1 A	FR DESTINATION SIGN
1 1 B	FR DESTINATION SIGN
1 1 C	FR DESTINATION SIGN
1 1 D	FR DESTINATION SIGN
1 1 E	FR DESTINATION SIGN
1 1 K	FR DESTINATION SIGN

No.	DESCRIPTION
1 2	12V BAT ELECTRONIC JCT BLOCK
1 2	BAT CPT 12V BATTERY
1 2 A	FR JCT BOX 12V DISC SW
1 2 A	RR JCT BOX 12V DISC SW
1 2 B	12V BAT ELECTRICAL JCT BLOCK
1 2 B	RR JCT BOX 12V DISC SW
1 2 B	FR JCT BOX 12V DISC SW
1 2 B E	BAT. EQUALIZER MONITOR
1 2 C	FR JCT BOX 12V DISC SW
1 2 C	RR JCT BOX 12V HOT WIRE
1 2 C E	RR JCT BOX 12V HOT WIRE
1 2 D	BAT CPT 12V BATTERY
1 2 D A	12V IGNITION DISTRIBUTION
1 2 D T	TTLT MODULE
1 2 D Z	ZF TRANSM. HOTWIRE
1 2 E	FR JCT BOX 12V DISC SW
1 2 E	RR JCT BOX 12V DISC SW
1 2 F	BAT CPT 12V FJB & IC
1 2 F	FR JCT BOX 12V DISC SW
1 2 G	FR JCT BOX 12V DISC SW
1 2 H	12 V IGNITION D.T.RUN LIGHT
1 2 J	FR JCT BOX 12V DISC SW
1 2 I	12V IGNITION DISTRIBUTION
1 2 I	RR JCT BOX 12V IGNITION
1 2 K	12 VOLT IGN. TTLT & HVAC MODULE
1 2 I A	12V IGNITION DISTRIBUTION
1 2 I A	FR JCT BOX 12V IGNITION
1 2 I B	FR JCT BOX 12V IGNITION
1 2 I E	ABS-FR JCT BOX 12V IGNITION
1 2 I F	FR JCT BOX 12V IGNITION
1 2 I Z	12 V IGNITION FOR ZF TRANSM.
1 2 L X	CLUSTER (12V HOT WIRE)
1 2 M	ABS-FR JCT BOX 12V DISC. SW.
1 2 P	LH CONSOLE POWER OUTLET
1 2 R	BAT CPT 12V DISC RLY TO RJB
1 2 R	MEMORY BATTERY RADIO
1 2 S	SOUND SYSTEM 12V RADIO
1 2 S 1	SOUND SYSTEM 12V RADIO
1 2 S 1 A	DVD KARAOKE FEEDING
1 2 S 2	SOUND SYSTEM 12V RADIO
1 2 S 2 A	DVD KARAOKE FEEDING
1 2 S B	SOUND SYSTEM 12V FEEDING
1 2 S S	SOUND SYSTEM 12V FEEDING
1 2 V	RR JCT BOX 12V DISC SW
1 2 V A	BATTERY TO EQUALIZER 12V
1 2 V D	12V HOT WIRE DISTRIBUTION
1 2 V F	BAT CPT 12V FJB & IC
1 2 V I	12V IGNITION DISTRIBUTION
1 2 V R	BAT CPT 12V DISC RLY TO RJB
1 2 W	12V BATTERY DDEC III

No.	DESCRIPTION
1 2 W	ENTRANCE DOOR (SEDAN)
1 2 W A	ENTRANCE DOOR (SEDAN)
1 2 W B	ENTRANCE DOOR (SEDAN)
1 2 X	FR JCT BOX 12V DISC SW
1 2 X 2	FR JCT BOX 12V DISC SW
1 2 Y	FR JCT BOX 12V DISC SW
1 3 A	ALARM & SIGNAL-LO AIR PRIM.
1 3 B	ALARM & SIGNAL-LO AIR SEC.
1 4	LAVATORY-FLUSHING PUMP
1 4 A	LAVATORY-FLUSHING PUMP
1 4 P	LAVATORY-FLUSHING PUMP
1 5	EXTERIOR LTS-MULTI FUNC LEVEL
1 5 A	WIPER & WASHER UPPER WINDSHIELD
1 6	SPEED - SIGNAL +
1 6 A	SPEED - SIGNAL +
1 6 T	SPEED - SIGNAL +
1 7	EXTERIOR LTS-FLASHER UNIT
1 7 A	EXTERIOR LTS-FLASHER UNIT
1 9	DIFFERENTIAL OIL TEMP
2 0	SPEED - SIGNAL -
2 0 T	SPEED - SIGNAL -
2 0 W	SPEED - SIGNAL -
2 1	EXTERIOR LTS-DIRECTIONAL LH
2 1 A	EXTERIOR LTS-DIRECTIONAL LH
2 1 B	EXTERIOR LTS-HAZARD
2 1 C	EXTERIOR LTS-CORNERING LH
2 1 H	EXTERIOR LTS-DIRECTIONAL LH
2 1 K	EXTERIOR LTS-CORNERING
2 1 N	EXTERIOR LTS-CORNERING LH
2 1 P	EXTERIOR LTS-CORNERING LH
2 3	EXTERIOR LTS-DIRECTIONAL RH
2 3	EXTERIOR LTS-DIRECTIONAL RH
2 3 A	EXTERIOR LTS-DIRECTIONAL RH
2 3 B	EXTERIOR LTS-DIRECTIONAL RH
2 3 C	EXTERIOR LTS-CORNERING RH
2 3 N	EXTERIOR LTS-CORNERING RH
2 3 P	EXTERIOR LTS-CORNERING RH
2 4	BAT CPT 24V BATTERY
2 4	FR JCT BOX 24V DISC SW
2 4 A	BOOSTER BLOCK 24V DISC SW
2 4 A	FR JCT BOX 24V DISC SW
2 4 A	RR JCT BOX 24V DISC SW
2 4 B	24V STARTER RLY FEEDING
2 4 B	FR JCT BOX 24V DISC SW
2 4 B A	RR JCT BOX 24V DISC SW
2 4 B C	24 VOLT BATT. CHARGER
2 4 B E	RJB CPT-BAT EQ MONITOR HOT WIRE
2 4 C	FR JCT BOX 24V DISC SW
2 4 C	RR JCT BOX 24V DISC SW
2 4 D	BAT CPT 24V HOT WIRE

No.	DESCRIPTION
2 4 D	FR JCT BOX 24V HOT WIRE
2 4 D	RR JCT BOX 24V HOT WIRE
2 4 D A	A/C JCT BOX 24V HOT WIRE
2 4 D Z	24 V HOT WIRE FOR ZF TRANSM.
2 4 E	BAT CPT 24V DISC SW
2 4 E	FR JCT BOX 24V DISC SW
2 4 E	RR JCT BOX 24V DISC SW
2 4 F	FR JCT BOX 24V DISC SW
2 4 F	RR JCT BOX 24V DISC SW
2 4 G	FR JCT BOX 24V DISC SW
2 4 G	RR JCT BOX 24V DISC SW
2 4 H	FR JCT BOX 24V DISC SW
2 4 H	RR JCT BOX 24V DISC SW
2 4 I	FR JCT BOX 24V IGNITION
2 4 I	RR JCT BOX 24V IGNITION
2 4 I A	FR JCT BOX 24V IGNITION
2 4 I B	FR JCT BOX 24V IGNITION
2 4 I B	RR JCT BOX 24V IGNITION
2 4 I C	FR JCT BOX 24V IGNITION
2 4 I C	RR JCT BOX 24V IGNITION
2 4 I F	FJB 24VOLT IGNITION
2 4 I Z	ZF TANSM. IGNITION
2 4 P	FR JCT BOX 24V DISC SW
2 4 S	24V DISC SW RLY SIGNAL
2 4 S 1	SOUND SYSTEM 24V AMPLIFIER
2 4 S 2	SOUND SYSTEM 24V AMPLIFIER
2 4 S 3	SOUND SYSTEM 24V VIDEO
2 4 S 4	SOUND SYSTEM 24V VIDEO
2 4 S B	SOUND SYSTEM 24V FEEDING
2 4 S S	SOUND SYSTEM 24V FEEDING
2 4 R	24 VOLTS FRONT CAMERA SW.
2 4 V 2	RR JCT BOX 24V DISC SW
2 4 V 3	RR JCT BOX 24V DISC SW
2 4 V 4	RR JCT BOX 24V DISC SW
2 4 V 5	RR JCT BOX 24V DISC SW
2 4 V D	24V HOT WIRE RR JCT BOX
2 4 V F	BAT CPT 24V SW TO FJB & IC
2 4 V A	BATTERY TO EQUALIZER 24V
2 4 V I	RR JCT BOX 24V IGNITION
2 4 V R	BAT CPT 24V DISC SW TO RJB
2 4 W	RR JCT BOX 24V DISC SW (WCL)
2 4 W C	BATT.CPT TO HYD. PUMP (WCL)
2 4 W L	24V BATTERY-HYD. PUMP (WCL)
2 4 Z Z	24 VOLT - ZF TRANSM. POWER
2 5	24 VOLT ALT.SIGNAL MODULE
2 5 A 1	PRE-EXITATION ALT. BOSCH #1
2 5 A 2	PRE-EXITATION ALT. BOSCH #2
2 5 A	T.T. LT. ALTERNATOR #1
2 5 B	12 VOLTS IGN. ALT. SIGNAL MODULE
2 5 D	12 V. ENGINE RUN / HVAC SYSTEM

CIRCUIT NUMBER CODE

No.	DESCRIPTION
2 5 E	USE ON VIP ONLY
2 5 F	12 VOLT IGN. DISTRIBUTION
2 5 H	24 VOLT IGN. ALT. BOSCH
2 5 K	T.T. LT. ALTERNATOR #2
2 6 A	CIGAR LIGHTER
2 6	DRIVER'S WINDOW LIFTER
2 6 B	DRIVER'S WINDOW LIFTER
2 6 C	DRIVER'S WINDOW LIFTER
2 7	LAVATORY-EMERGENCY SONALERT
2 8 A	A/C & HEAT SYSTEM-HI PRESSURE
2 8 H	TTLT HI LO PRESS
2 8 T	TTLT HI LO PRESS
2 9	A/C & HEAT SYSTEM-DRIVER'S HTR
2 9 A	A/C & HEAT SYSTEM-DRIVER'S HTR
2 9 B	A/C & HEAT SYSTEM-DRIVER'S HTR
2 9 H	HVAC DASH MODULE
3 0 A	GALLEY
3 1 A	A/C & HEAT SYSTEM-UNLOADER
3 1 B	A/C & HEAT SYSTEM-UNLOADER
3 1 B	WIPER & WASHER SYSTEM
3 1 C	WIPER & WASHER SYSTEM
3 1 D	WIPER & WASHER SYSTEM
3 1 E	WIPER & WASHER SYSTEM
3 1 J	WIPER & WASHER SYSTEM
3 1 X	WIPER & WASHER SYSTEM
3 2	EXTERIOR LTS-BACK-UP
3 2 B	EXTERIOR LTS-BACK-UP
3 2 C	BACK-UP PWR & SIGNAL
3 2 D	BACK-UP ALARM
3 5	ENTRANCE DOOR (SEDAN)
3 5 B	ENTRANCE DOOR (SEDAN)
3 5 BB	ENTRANCE DOOR (SEDAN)
3 5 D	ENTRANCE DOOR (SEDAN)
3 6	JACOB BRAKE SYSREM
3 6 A	JACOB BRAKE SYSREM
3 8	INTERIOR LTS-24V FLUORESCENT
3 8 A	INTERIOR LTS-24V FLUORESCENT
3 8 C	INTERIOR LTS-24V FLUORESCENT
3 8 D	INTERIOR LTS-24V FLUORESCENT
3 9	INTERIOR LTS-24V LH CONSOLE SW
3 9 A	INTERIOR LTS-DRIVER"S LTS
3 9 P	READING LIGHTS
4 1	A/C & HEAT SYSTEM-COND FAN MOT
4 1 A	A/C & HEAT SYSTEM-COND FAN MOT
4 1 B	A/C & HEAT SYSTEM-COND FAN MOT
4 2	A/C & HEAT SYSTEM-COND FAN MOT
4 2 A	A/C & HEAT SYSTEM-COND FAN MOT
4 3	HAT RACK FAN
4 3 A	HAT RACK FAN
4 3 B	HAT RACK FAN

No.	DESCRIPTION
4 3 D	HAT RACK FAN
4 3 E	HAT RACK FAN
4 3 F	HAT RACK FAN
4 3 G	HAT RACK FAN
4 4	EXTERIOR LTS-FOG
4 4 A	EXTERIOR LTS-FOG
4 4 B	EXTERIOR LTS-FOG
4 4 C	EXTERIOR LTS-FOG & HAZARD
4 5 A	A/C & HEAT SYSTEM-FULL AIR
4 5 B	A/C & HEAT SYSTEM-WATER PUMP
4 5 C	A/C & HEAT SYSTEM-WATER VALVE
4 5 D	A/C & HEAT SYSTEM-WATER VALVE
4 5 E	A/C & HEAT SYSTEM-HEAT 1 SIGN
4 5 G	A/C & HEAT SYSTEM-DRIVER'S HTR
4 5 H	A/C & HEAT SYSTEM-DRIVER'S HTR
4 5 W	A/C & HEAT SYSTEM-COND. DOOR AJAR
4 6	EXTERIOR LTS-MARKER
4 6 A	EXTERIOR LTS-MARKER
4 6 B	EXTERIOR LTS-MARKER
4 6 B	EXTERIOR LTS-MARKER
4 6 C	EXTERIOR LTS-MARKER
4 7	A/C & HEAT SYSTEM-DRIVER'S HTR
4 8	ENTRANCE DOOR (SEDAN)
4 8 A	ENTRANCE DOOR (SEDAN)
4 9	ENTRANCE DOOR (SEDAN)
4 9 A	ENTRANCE DOOR (SEDAN)
5 2	ALARM & SIGNAL-ELEC. HORN
5 2 A	ALARM & SIGNAL-ELEC. HORN
5 2 B	ALARM & SIGNAL- AIR HORN
5 2 C	ALARM & SIGNAL- AIR HORN
5 3	ALARM & SIGNAL-ELEC. HORN
5 3 A	WIPER & WASHER SYSTEM
5 3 B	WIPER & WASHER SYSTEM
5 3 C	WIPER & WASHER SYSTEM
5 3 E	WIPER & WASHER SYSTEM
5 3 J	WIPER & WASHER SYSTEM
5 5	EXTERIOR LTS-HI BEAM
5 7	EXTERIOR LTS-HI BEAM
5 7 A	A/C & HEAT SYSTEM-WATER PUMP
5 7 A	EXTERIOR LTS-HI BEAM
5 7 B	A/C & HEAT SYSTEM-WATER PUMP
5 7 C	PRE-HEAT WATER HEATER
5 8	EXTERIOR LTS-LO BEAM
5 8 A	EXTERIOR LTS-LO BEAM
5 8 B	EXTERIOR LTS-LO BEAM
5 8 E	EXTERIOR LTS-LO BEAM
5 9 A	JACOB BRAKE SYSTEM
6 1	EXTERIOR LTS-24V FEED SW
6 1 A	EXTERIOR LTS-HEAD SIGNAL

No.	DESCRIPTION
6 2	LAVATORY-OCCUPIED LT
6 2 A	LAVATORY-FLUOR LT
6 2 B	LAVATORY-FLUOR LT
6 2 E	LAVATORY-OCCUP & FLUOR LT
6 3	EXTERIOR LTS-CLEARANCE
6 3 A	EXTERIOR LTS-CLEARANCE
6 3 B	EXTERIOR LTS-CLEARANCE
6 3 C	EXTERIOR LTS-MARKER SIGNAL
6 3 D	EXTERIOR LTS-MARKER & TAIL
6 3 E	EXTERIOR LTS-CLEARANCE
6 3 F	EXTERIOR LTS-MARKER BLINKER
6 3 H	EXTERIOR LTS-TAIL
6 4	DRIVERS FAN
6 4 B	DRIVERS FAN
6 4 C	DRIVERS FAN
6 5	FOOT DAMPER MOTOR
6 5 A	FOOT DAMPER MOTOR
6 5 D	DRIVER REC. DAMPER
6 6	O_PASS. ON/OFF
6 7	24 VOLT RUN DISTRIBUTION
6 7 A	A/C & HEAT SYSTEM
6 7 C	HEATING WINDSHIELD
6 7 K	A/C & HEAT SYSTEM-COND FAN CTR
6 7 L	A/C & HEAT SYSTEM-COND FAN CTR
6 7 X	A/C & HEAT SYSTEM
6 8	DASH & DEFROST DAMPER MOTOR
6 8 A	DASH & DEFROST DAMPER MOTOR
7 0	INTERIOR LTS-HAT RACK & RR RUN.
7 2	SUN VISOR-FEEDING
7 2 A	SUN VISOR-RH
7 2 B	SUN VISOR-RH
7 2 C	SUN VISOR-LH
7 2 D	SUN VISOR-LH
7 3	LAVATORY-FEEDING
7 4	INTERIOR LTS-READING RH
7 4 A	INTERIOR LTS-READING RH
7 4 B	INTERIOR LTS-READING RH
7 4 D	INTERIOR LTS-READING SIGNAL
7 5	INTERIOR LTS-READING LH
7 5 A	INTERIOR LTS-READING LH
7 6	FUEL TANK GAUGE
7 6 B	LOW FUEL LT & ETHER COLD START
7 6 C	LOW FUEL LT
7 6 P	FUEL PRIME PUMP
7 6 M	FUEL PRIME PUMP
7 7 B	A/C & HEAT SYSTEM-COMPRESSOR
7 7 C	A/C & HEAT SYSTEM-COMPRESSOR
7 7 H	A/C & HEAT SYSTEM-COMPRESSOR
8 1	EXTERIOR LTS-STOP SW
8 2	EXTERIOR LTS-STOP SIGNAL

No.	DESCRIPTION
8 2 A	EXTERIOR LTS-STOP SIGNAL
8 2 B	EXTERIOR LTS-STOP LTS
8 2 K	EXTERIOR LTS-STOP PARK BRK
8 2 L	EXTERIOR LTS-LH STOP
8 2 R	EXTERIOR LTS-LH STOP
8 3	ENGINE CTR-KEY SW ACCES SIGN
8 4	ENGINE CTR-KEY SW ACCES SIGN
8 5	ENGINE CTR-KEY SWIGNITION SIGN
8 5	24V IGNITION SIGNAL
8 5 A	24V IGN DASH INSTRUMENTATION
8 5 B	ENGINE CTR-24V IGNITION
8 5 C	PARKING BRAKE SWITCH
8 5 E	STOP LIGHT RLY
8 5 F	ENGINE CTR-ENGINE CTR SW IGN
8 5 F	LO AIR SONALERT
8 5 G	RADIATOR FAN CLUTCH
8 5 X	12V IGN ABS
8 5 Y	ABS SYSTEM
8 6	ENGINE CTR-STARTER SOL SIGN
8 6 A	ENGINE CTR-STARTER SOL SIGN
8 6 F	ENGINE CTR-STARTER TTLT SIGN
8 6 T	ENGINE CTR-STARTER TTLT SIGN
8 8	ENGINE CTR-RR START SIGNAL
8 9	ENGINE CTR-RR START SIGNAL
9 0 B	A/C & HEAT SYSTEM-COND FAN MOT
9 0 B	ENGINE CTR-MAST KEY SW FEED
9 0 C	A/C & HEAT SYSTEM-COND FAN MOT
9 0 F	CHARG SYST-VOLTAGE REGUL. "B"
9 0 H	A/C & HEAT SYSTEM-EVAP FAN MOT
9 1	PARKING BRAKE SW SIGNAL
9 1 A	DDEC-FAST IDLE SIGNAL
9 1 S	SONALERT PARKING BRAKE
9 1 W	PARK, BRAKE SW SIGN (WCL)
9 2	BATTERY EQUALIZER-CHECK BALANCE
9 3	BATTERY EQUALIZER-CHECK LO/HI
9 5 A	ENGINE BRAKE & RETARDER SYSTEM
9 7	TACHOMETER (-)
1 0 0	INTERIOR LTS-GENERAL
1 0 0 A	INTERIOR LTS-GENERAL
1 0 0 B	INTERIOR LTS-GENERAL
1 0 1	24V STARTER SOL FEEDING
1 0 1	WORLD TRANSM-LO SIGN SOL. LO
1 0 2	WORLD TRANSM-SOL. SUPPLY
1 0 2 A	24V STARTER TO BOSCH ALTERNATOR
1 0 3	LOW BUOY
1 0 4	WORLD TRANSM-SOL. FORWARD
1 0 5	WORLD TRANSM-RETARDER & SUMP
1 0 5 W	WORLD TRANSM-RETARDER & SUMP
1 0 6	WORLD TRANSM-OIL LEVEL HI
1 0 7	WORLD TRANSM-LOCKUP SOL. HI

CIRCUIT NUMBER CODE

No.	DESCRIPTION
108	WORLD TRANSM-REM. PWR WAKE UP
109	WORLD TRANSM-RET. SOL. LO
110	ALARM & SIGNAL-WATER TEMP
110	WORLD TRANSM-LOCKUP SOL. LO
111	WORLD TRANSM-SOL. C6
112	WORLD TRANSM-SPARE OUTPUT (+)
113	ALARM & SIGNAL-OIL PRESS
113	WORLD TRANSM-REVERSE WARNING
113W	WORLD TR.-REVERSE WARNING
113Z	ZF TRANSM.- REVERSE SIGNAL
114	INTERIOR LTS-DASH LT REGUL.
114	WORLD TRANSM-SPARE OUTPUT (-)
114A	INTERIOR LTS-DASH LT
114B	INTERIOR LTS-DASH LT REGUL.
114D	INTERIOR LTS-DASH LT REGUL.
114E	INTERIOR LTS-DASH LT REGUL.
115	ALARM & SIGNAL-TAG PRESS
115	DDEC III-COOLANT LEVEL
115	WORLD TRANSM-DO NOT SHIFT SIGN
115C	DDEC III-COOLANT LEVEL
115W	WORLD TRANSM-DO NOT SHIFT SIGN
115W	ZF TRANSM. - CHECK TRANSM. TTLT
116	WORLD TRANSM-LO SIGNAL SOL. HI
116B	A/C & HEAT SYSTEM-DRIVER'S HTR
117	WORLD TRANSM-SPARE INPUT (-)
117A	ALARM & SIGNAL-TRANSM OIL TEMP
117A	ALARM & SIGNAL-TRANSM OIL TEMP
118	WORLD TRANSM-SPARE INPUT (+)
119	WORLD TRANSM-ENG BRK INPUT (+)
120	WORLD TRANSM-SOL. C1
121	WORLD TRANSM-SOL. GRD 2
122	A/C & HEAT SYSTEM-DRIVER'S HTR
122	A/C & HEAT SYSTEM-FRESH AIR
122	WORLD TRANSM-SOL. GRD 4
122A	A/C & HEAT SYSTEM-FRESH AIR
123	WORLD TRANSM-NEUTRAL START
123A	ALARM & SIGNAL-FIRE DETECTOR
123B	ALARM & SIGNAL-FIRE DETECTOR
124	WORLD TRANSM-THROTTLE (HI)
125	WORLD TRANSM-RET. INDICATOR
125	GALLEY LAMP
125T	GALLEY LAMP
125W	WORLD TRANSM-RET. INDICATOR
126	KNEELING SYSTEM
126A	KNEELING SYSTEM
126B	KNEELING SYSTEM
126C	KNEELING SYSTEM
126D	KNEELING SYSTEM
126E	KNEELING SYSTEM
126F	KNEELING SYSTEM

No.	DESCRIPTION
126F1	KNEELING SYSTEM
126G	KNEELING SYSTEM
126H	KNEELING SYSTEM
126K	KNEELING SYSTEM
126P	KNEELING SYSTEM
126R	KNEELING SYSTEM
126W	5 MPH N.C. SIGNAL (WCL)
126S	KNEELING SYSTEM
126T	KNEELING SYSTEM
127	WORLD TRANSM-LUBE PRESS SW.
127	WORLD TRANSM-RETARDER FEED SOL.
127	POWER- PRE-HEAT WATER HEATER
127A	PRE-HEAT WATER HEATER
128A	PRE-HEAT WATER HEATER
128B	PRE-HEAT - BURNER ON SIGNAL
128	WORLD TRANSM-SOL. C2
129	POWER- PRE-HEAT WATER HEATER
129B	POWER- PRE-HEAT WATER HEATER
129	WORLD TRANSM-SOL. C5
130	A/C & HEAT SYSTEM-EVAP FAN MOTOR
130	WORLD TRANSM-SOL. GRD 3
131	WORLD TRANSM-SOL. C4
132	WORLD TRANSM-ENG BRK OUTPUT (-)
132W	WORLD TRANSM-ENG BRK OUTPUT (-)
133	GALLEY-HEAT CONTAINERS
133A	GALLEY-HEAT CONTAINERS
133B	GALLEY-HEAT CONTAINERS
133C	GALLEY-HEAT CONTAINERS
133	WORLD TRANSM-RET. ACTUATOR HI
134	GALLEY-HEAT CONTAINERS
134A	GALLEY-HEAT CONTAINERS
134	WORLD TRANSM-RET. APPLY SOL. HI
135	A/C & HEAT SYSTEM-AIR SENSOR
135A	A/C & HEAT SYSTEM-AIR SENSOR
135	WORLD TRANSM-ANALOG GRD
135D	WORLD TRANSM-RETARDER RES MOD
135C	WORLD TRANSM-RETARDER TEMP
136	GALLEY-ACCESSORIES
136	WORLD TRANSM-ECU POWER
136V	WORLD TRANSM-12V BATTERY
136W	WORLD TRANSM-12V BATTERY
136X	WORLD TRANSM-12V BATTERY
137	WORLD TRANSM-RETARDER
137A	MIRROR (SPARTAN & RAMCO)
137B	RR VIEW MIRROR (SPARTAN)
137C	RR VIEW MIRROR (SPARTAN)
137D	RR VIEW MIRROR (SPARTAN)
137E	RR VIEW MIRROR (SPARTAN)
137G	RR VIEW MIRROR (SPARTAN)
138	ABS SYSTEM

No.	DESCRIPTION
138	WORLD TRANSM-RETARDER TEMP
138A	ABS SYSTEM
139	ABS SYSTEM
139	WORLD TRANSM-OUTPUT SPEED HI
140	ABS SYSTEM
140	WORLD TRANSM-OUTPUT SPEED LO
141	ABS SYSTEM
141	WORLD TRANSM-ENGINE SPEED HI
142	ABS SYSTEM
142	WORLD TRANSM-SERIAL COM. A
143	ABS SYSTEM
143	WORLD TRANSM-ECU BATTERY GRD
143A	ABS SYSTEM
143W	WORLD TRANSM-BATTERY GRD
144	ABS SYSTEM
144	WORLD TRANSM-ECU CHASSIS GRD
144A	ABS SYSTEM
145	ABS SYSTEM
146	ABS SYSTEM
146A	TRANSMISSION-12V IGNITION
146	WORLD TRANSM-IGNITION SENSE
146W	WORLD TRANSM-12V IGNITION
146X	WORLD TRANSM-12V IGNITION
147	ABS SYSTEM
147	WORLD TRANSM-OIL TEMP
147A	ETHER COLD START & D.R.L.
147C	ETHER COLD START
148	ABS SYSTEM
148	WORLD TRANSM-OUTPUT SPEED LO
149	ABS SYSTEM
149	WORLD TRANSM-TURBINE SPEED HI
149A	ABS SYSTEM
150	DDEC III-ECM BATTERY GRD
150	WORLD TRANSM-ENGINE SPEED LO
150A	DDEC III-ECM BATTERY GRD
151	ABS SYSTEM
151	DDEC III-ECM BATTERY GRD
151	WORLD TRANSM-SERIAL COM. B
152	ABS SYSTEM
153	WORLD TRANSM-SPARE INPUT (-)
154	ABS SYSTEM
154	WORLD TRANSM-ABS RET. INPUT
155	WORLD TRANSM-SPARE INPUT (-)
156	WORLD TRANSM-THROTTLE POS.
156A	ABS SYSTEM
157	WORLD TRANSM-SPEEDO SIGNAL
157B	ABS SYSTEM
157D	A.T.C. SYSTEM
157E	A.T.C. SYSTEM
157F	A.T.C. SYSTEM

No.	DESCRIPTION
158	WORLD TRANSM-DIMMER
160	ALARM & SIGNAL-TAG PRESS SW
160	WORLD TRANSM-SER. INTERFACE (-)
161	WORLD TRANSM-SIGNAL GRD
161B	WORLD TRANSM-SIGNAL GRD
162	WORLD TRANSM-PRESS. SW C3
163	WORLD TRANSM-RETARDER ENABLE
164	WORLD TRANSM-RET. ACTUATOR SIGN
165	A/C & HEAT SYSTEM-TRANSMITER
165	WORLD TRANSM-OIL LEVEL SIGNAL
166B	A/C & HEAT SYSTEM-EVAP. MOD.
167	W. TR.-OUT SPEED INTERLOCK
167Z	ZF- OUT SPEED INTERLOCK
168	A/C & HEAT SYSTEM-HUMIDISTAT
168	WORLD TRANSM-SER. INTERFACE (+)
168A	A/C & HEAT SYSTEM-HUMIDISTAT
170	LUGGAGE DOOR LOCK
170C	LUGGAGE DOOR LOCK
170E	LUGGAGE DOOR LOCK
170H	LUGGAGE DOOR LOCK
181A	THERMOMETER INSIDE SENSOR
181B	THERMOMETER INSIDE SENSOR
181C	THERMOMETER OUTSIDE SENSOR
181D	THERMOMETER OUTSIDE SENSOR
197	FUEL WATER FILTER
197A	FUEL WATER FILTER
197B	FUEL WATER FILTER
198	FILTER FUEL HEATER
199	AIR FILTER RESTRICTION SENDER
201	WORLD TRANSM-SPARE
202	WORLD TRANSM-SPARE
203	WORLD TRANSM-SPARE
204	WORLD TRANSM-SPARE
205	WORLD TRANSM-SPARE
206	WORLD TRANSM-SPARE
214	WORLD TRANSM-BACK UP SIGNAL
225	LAVATORY FAN
225A	LAVATORY FAN
231	NEUTRAL SIGNAL GRD
231A	NEUTRAL COIL RELAY FEED SIGNAL
231W	NEUTRAL SIGNAL GRD (WCL)
231Z	ZF NEUTRAL SIGNAL GRD
240	DDEC III-ECM 12V FEEDING
241	DDEC III-ECM 12V FEEDING
251A	DDEC III - DATA LOGGER 12 H.W.
251	DDEC III - PRODRIVER 12V H.W.
253	GALLEY-MICROWAVE
254	GALLEY-12V FRIGO NORCOLD
254A	GALLEY-FRIGO
255	GALLEY-COFEEMAKER

CIRCUIT NUMBER CODE

No.	DESCRIPTION
255 A	GALLEY-COFEEMAKER
257	WINDSHIELD HEATED
257 A	WINDSHIELD HEATED
257 B	WINDSHIELD HEATED
257 C	WINDSHIELD HEATED
257 D	WINDSHIELD HEATED SPARE
257 E	WINDSHIELD HEATED SPARE
258	WINDSHIELD HEATED
258 A	WINDSHIELD HEATED
259	WINDSHIELD HEATED
259 A	WINDSHIELD HEATED
260	WINDOW AJAR
290	FAN CLUTCH RADIATOR
290	FAN CLUTCH RADIATOR
291	FAN CLUTCH RADIATOR SPD 1
292	FAN CLUTCH RADIATOR SPD 2
300	DOOR AJAR MAGN.SW. (WCL)
300 A	POWER SYSTEM SW. (WCL)
300 B	DOOR AJAR ALARM (WCL)
301	POWER SYSTEM SW. (WCL)
302	DOOR AJAR T.T.LT. (WCL)
302 A	DOOR AJAR ALARM SIGN.(WCL)
302 B	DOOR AJAR MAGN.SW. (WCL)
303	REMOTE WALL SW. DWN (WCL)
304	REMOTE WALL SW. UP (WCL)
305	PARK. BRAKE SOL. VALVE (WCL)
305 A	PARK. BRAKE SAFETY SW. (WCL)
305 A1	DOOR AJAR - PARK. BRAKE (WCL)
306	CONTROL SYSTEM (WCL RICON)
307	CONTROL SYSTEM (WCL RICON)
308	CONTROL SYSTEM (WCL RICON)
309	CONTROL SYSTEM (WCL RICON)
310	EATON TRANSMISSION
311	EATON TRANSMISSION
312	EATON TRANSMISSION
313	EATON TRANSMISSION
314	EATON TRANSMISSION
315	EATON TRANSMISSIOM
316	EATON TRANSMISSION - EPL
317	EATON TRANSMISSION
318	EATON TRANSMISSION
319	EATON TRANSMISSION
320	EATON TRANSMISSION
321	EATON TRANSMISSION
322	EATON TRANSMISSIION
323	EATON TRANSMISSION
324	EATON TRANSMISSION
325	EATON TRANSMISSION
326	EATON TRANSMISSION
327	EATON TRANSMISSION

No.	DESCRIPTION
328	EATON TRANSMISSION
329	EATON TRANSMISSION
330	EATON TRANSMISSION - EPL
331	EATON TRANSMISSION - EPL
332	EATON TRANSMISSION
333	EATON TRANSMISSION - 12V BATTERY
334	EATON GENERATION 2
416	DDEV IV- SENSOR SUPPLY 5VDC
417	DDEC III-LIMIT SPEED GOVERNOR
419	DDEC III-CHECK ENGINE LIGHT
439	DDEC III-12V IGNITION
440	DDEC III-12V IGNITION
440 A	DDEC III-12V IGNITION
451	DDEC III-A/C FAN CLUTCH
452	DDEC IV- SENSOR RETURN (ENGINE)
505	DDEC III-TACHOMETER DRIVE
509	DDEC III-STOP ENGINE LIGHT
510	DDEC III-FAST IDLE SIGNAL
524	DDEC III-ENGINE BRAKE DISABLE
524 B	ZF SIGNAL – AUX. SENSOR THROTTLE
525	DDEC III-FAST IDLE SIGNAL
528	DDEC III-STOP ENG. OVERRIDE
531	DDEC III-CRUISE CLUTCH RELEASE
541	DDEC III-CRUISE SET SW
543	DDEC III-CRUISE STOP SW CUT IN
544	DDEC III-CRUISE ON/OFF SW
545	DDEC III-CRUISE RESUME SW
555	DDEC III-FAN CLUTCH SPEED# 1
556	DDEC III-VEHICLE SPEED (+)
557	DDEC III-VEHICLE SPEED (-)
563	DDEC III-FAN CLUTCH SPEED# 2
564	DDEC III-DIGITAL OUTPUT
564 B	DDEC III-DIGITAL OUTPUT
565	DDEC III-ENGINE BRAKE ACTIVE
565 Z	DECELERATION LTS
583	DDEC III-ENGINE BRAKE 4 CYL.
700	J1587(+)
701	J1587(-) – GROUND
705	ZF SIGNALS
706	ZF SIGNALS
707	ZF SIGNALS
717	ZF SIGNALS
718	ZF SIGNALS
719	ZF SIGNALS
720	ZF SIGNALS
740	EASY START VALVE
761	ZF SIGNALS

No.	DESCRIPTION
900	DDEC III-DATA LINK (+)
901	DDEC III-DATA LINK (-)
905	DDEC IV- AMBIANT AIR TEMPERATURE
908	DDEC III-HYDRAULIC PWM#1 OUTPUT
916	DDEC III-SENSOR SUPPLY (5VDC)
925	J1939-HIGH
926	J1939-LOW
927	J1939-SHIELD
952	DDEC III-SENSOR RETURN #1
953	DDEC III-SENSOR RETURN #2
953 A	THROTTLE INHIBIT
976	DDEC IV- RELATIVE HUMIDITY
979	DDEC III-ENGINE BRAKE 2 CYL.
988	DDEC III-CRUISE ENABLE LTS.

No.	DESCRIPTION

CIRCUIT NUMBER CODE

No.	DESCRIPTION
B A	INTERIOR LTS-110V FLUORESCENT
B B	INTERIOR LTS-110V FLUORESCENT
D 1	SOUND SYSTEM-FR RH SPEAKER
D 2	SOUND SYSTEM-FR RH SPEAKER
D 3	SOUND SYSTEM-FR RH SPEAKER
D 4	SOUND SYSTEM-RR RH SPEAKER
D 5	SOUND SYSTEM-RR RH SPEAKER
D 6	SOUND SYSTEM-RR RH SPEAKER
D 7	SOUND SYSTEM-RR RH SPEAKER
D 8	SOUND SYSTEM-RR RH SPEAKER
D 3 4	SOUND SYSTEM-RR RH SPEAKER
D 6 7	SOUND SYSTEM-RR RH SPEAKER
G 1	SOUND SYSTEM-FR LH SPEAKER
G 2	SOUND SYSTEM-FR LH SPEAKER
G 3	SOUND SYSTEM-FR LH SPEAKER
G 4	SOUND SYSTEM-RR LH SPEAKER
G 5	SOUND SYSTEM-RR LH SPEAKER
G 6	SOUND SYSTEM-RR LH SPEAKER
G 7	SOUND SYSTEM-RR LH SPEAKER
G 8	SOUND SYSTEM-RR LH SPEAKER
G 3 4	SOUND SYSTEM-RR LH SPEAKER
G 6 7	SOUND SYSTEM-RR LH SPEAKER
L 1 A	INTERIOR LTS-110V FLUORESCENT
L 1 B	INTERIOR LTS-110V FLUORESCENT
L 2 A	INTERIOR LTS-110V FLUORESCENT
L 2 B	INTERIOR LTS-110V FLUORESCENT
L 0	110V RECEPTACLE- 110V FLUOR.
L 1	110V RECEPTACLE- 110V FLUOR.
L 2	110V RECEPTACLE- 110V FLUOR.
R A	INTERIOR LTS-110V FLUORESCENT
R B	INTERIOR LTS-110V FLUORESCENT
S H 1	SHIELD CHASSIS GRD
S H 2	SHIELD CHASSIS GRD
S H 3	SHIELD CHASSIS GRD
S H 4	SHIELD CHASSIS GRD
S P 2	SPARE-FJB TO FR SERV CPT
S P 3	SPARE-FJB TO CENTER DASH
S P 4	SPARE-FJB TO CENTER DASH
S P 5	SPARE-RJB TO LUGG CPT #2
S P 6	SPARE-RJB TO LUGG CPT #1
S P 7	SPARE-RJB TO LUGG CPT #1
S P 8	SPARE-RJB TO LUGG CPT #1
S P 9	SPARE-RJB TO LUGG CPT #2
S P 10	SPARE-RJB TO LUGG CPT #1
S P 11	SPARE-FJB TO RJB
S P 12	SPARE-RJB TO ENGINE
S P 13	SPARE-RJB TO ENGINE
S P 14	SPARE-FJB TO RJB
S P 15	SPARE-RJB TO ENGINE
S P 16	SPARE-RJB TO ENGINE

No.	DESCRIPTION
S P 17	SPARE-RJB TO ENGINE
S P 18	SPARE-FJB TO RJB
S P 24	SPARE-RJB TO LAVATORY ROOF
S P 25	SPARE-RJB TO LAVATORY ROOF
S P 26	SPARE-RJB TO LAVATORY ROOF
S P 27	SPARE-RJB TO LH HAT RACK
S P 28	SPARE-RJB TO LH HAT RACK
S P 31	SPARE-RJB TO RH HAT RACK
S P 32	SPARE-RJB TO RH HAT RACK
S P 33	SPARE-FJB TO RJB
S P 38	SPARE-FJB TO RJB
S P 43	SPARE-FJB TO RJB
S P 45	SPARE-FJB TO RJB
S P 46	SPARE-RJB TO LH FR ROOF
S P 48	SPARE-RJB TO DASH CENTER PANEL
S P 56	SPARE-ENGINE TO RH SW PANEL
S P 57	SPARE-DASH CENTER PANEL TO ENG.
S P 58	SPARE-DASH CENTER PANEL TO ENG.
S P 59	SPARE-FJB TO ENGINE
S P 61	SPARE-FJB TO DASH RH PANEL
S P 68	SPARE-FJB TO ENGINE
S P 69	SPARE-FJB TO FR AXLE
S P 70	SPARE-FJB TO FR AXLE
S P 71	SPARE-FJB TO RH SW PANEL
S P 72	SPARE-FJB TO FR SERV CPT
S P 74	SPARE-FJB TO LH CONSOLE
S P 77	SPARE-FJB TO EVAPORATOR CPT
S P 78	SPARE-FJB TO CONDENSER CPT
S P 79	SPARE-FJB TO CONDENSER CPT
S P 87	SPARE-RJB TO LH HAT RACK
S P 88	SPARE-RJB TO RH HAT RACK
S P 92	SPARE-RJB TO CONDENSER CPT
S P 93	SPARE-RJB TO EVAPORATOR CPT
S P 94	SPARE-RJB TO RR ROOF
S P 95	SPARE-RJB TO RR ROOF
S P 96	SPARE-RJB TO LUGG CPT #2
S P 97	SPARE-RJB TO LUGG CPT #3
S P 98	SPARE-RJB TO LUGG CPT #3
S P 104	SPARE-RJB TO ENGINE CPT
S P 105	SPARE-FJB TO ENGINE
S P 106	SPARE-RJB TO BATT. CPT.
S P 107	SPARE-RJB TO BATT. CPT.
S P 108	SPARE-RJB TO BATT. CPT.
S P 109	SPARE-RJB TO ENGINE CPT.
S P 110	SPARE-RJB TO ENGINE CPT.
S P 111	SPARE-RJB TO ENGINE CPT.
S P 112	SPARE-RJB TO ENGINE CPT.
S P 114	SPARE-FJB TO U/DASH WIPER
S P 115	SPARE-FJB TO U/DASH WIPER
S P 116	SPARE-FJB TO U/DASH FLOOR

No.	DESCRIPTION
S P 117	SPARE-FJB TO U/DASH FLOOR
S P 119	SPARE-RJB TO ENGINE CPT.
SPZ 1	SPARE WIRE-ZF TRANSM.
SPZ 2	SPARE WIRE-ZF TRANSM.
SPZ 3	SPARE WIRE-ZF TRANSM.
SPZ 4	SPARE WIRE-ZF TRANSM.
SPZ 5	SPARE WIRE-ZF TRANSM.
SPZ 6	SPARE WIRE-ZF TRANSM.
W C	A/C & HEAT SYST-EVAP CTR SIGN
Y C	INTERIOR LTS-110V FLUORESCENT
Y D	INTERIOR LTS-110V FLUORESCENT
0	BC - BAT. CPT CHASSIS GRD
0	CONDENSER CPT GRD
0	RS - RR JCT BOX RLY GRD
0	GALLEY GRD
0 A	BC - SHIELD GRD
0 A	RS - RR JCT BOX RLY GRD
0 A	FRS - FR ROOF ACCES. GRD
0 A	RS - LUG. CPT ACCES. GRD
0 A	A/C SYSTEM-EVAP. GRD
0 A A	RS - VOLTAGE REGULATOR GRD
0 B 1	EC – RR JCT PANEL GRD
0 B	EC - ENGINE GRD
0 B	FRS - FR ROOF HEAT WIND GRD
0 B	RS - LUG. CPT ACCES. GRD
0 B E	RJB - BAT. EQUAL. BAT GRD
0 C	EC - STARTER MOTOR GRD
0 C	FS - SERV. CPT ACCES. GRD
0 C	BC - FAN EVAP. & CONDENSER GRD
0 C R	24V DISC. SW. RLY GRD SIGNAL
0 C S	24V DISC. SW. RLY GRD SIGNAL
0 C 1	FS - SERV. CPT ACCES. GRD
0 C 2	FS - SERV. CPT ACCES. GRD
0 C 3	FS - SERV. CPT ACCES. GRD
0 C 4	FS - FJB CPT ACCES. GRD
0 D	BC - FAN CONDENSER GRD
0 D	RS - HAT RACK ACCES. LH GRD
0 D	RJB – IGNITION RELAY
0 D F	RS - RR SIDE FLASH & MARK GRD
0 D R	RS - RJB DOCKING LT RESISTORS
0 E	RS - HAT RACK ACCES. LH GRD
0 E A	EATON TRANSMISSION GRD
0 F	RS - HAT RACK ACCES. RH GRD
0 G	RS - HAT RACK ACCES. RH GRD
0 H	RS - LAVATORY ACCES. GRD
0 J	FS - LH CONSOLE SW GRD
0 J	RS - RR ROOF ACCES. GRD
0 K	RS - RR ROOF ACCES. GRD
0 K	RS - RJB A/C JCT PANEL GRD
0 L	FS - FR SERVICE CPT LTS GRD

No.	DESCRIPTION
0 L 1	FS - FR SERVICE CPT LTS GRD
0 L 2	FS - FR SERVICE CPT LTS GRD
0 L 3	FS - FJB GRD
0 L 4	FS - FJB GRD
0 L 5	FS - CIGAR LIGHTER
0 L 6	FS - FRONT SERVICE CPT LTS GRD
0 L	RS - ENGINE CPT ACCES. GRD
0 L	ENTRANCE DOOR (SEDAN) GRD
0 L H	RS - RR END LAMPS LH GRD
0 M	FS - ELECTRICAL MOTOR GRD
0 M 1	FS - ELECTRICAL MOTOR GRD
0 M 3	FS - ELECTRICAL MOTOR GRD
0 M 4	FS - ELECTRICAL MOTOR GRD
0 M 5	FS - ELECTRICAL MOTOR GRD
0 M 6	FS - FJB GRD
0 M 7	FS - ELECTRICAL MOTOR GRD
0 M	RS - ENGINE CPT ACCES. GRD
0 M R	24V DISC. SW. RLY GRD SIGNAL
0 M S	24V DISC. SW. RLY GRD SIGNAL
0 N	RS - ENGINE CPT ACCES. GRD
0 P	RS - ENGINE CPT ACCES. GRD
0 R	FS - SOUND SYS. JCT PANEL GRD
0 R	RS - RJB GRD
0 R	RS - ENGINE CPT ACCES. GRD
0 R E	RADIO &CTRL HEAD CHASSIS GRD
0 R H	RS - RR END LAMPS RH GRD
0 S	12 VOLT RUN - GND RELAY
0 S A	EC-BOSCH ALT. GROUND
0 S 2	SOUND SYSTEM RADIO GRD
0 S 3	SOUND SYSTEM VIDEO GRD
0 S S	SOUNS SYSTEM BATT. GRD
0 T	FS - DASH ACCES. GRD
0 T 1	FS - DASH ACCES. GRD
0 T 2	FS - DASH ACCES. GRD
0 T 3	FS - DASH ACCES. GRD
0 T 4	FS - DASH ACCES. GRD
0 T 5	FS - HVAC DASH MODULE. GRD
O T 6	FS - HVAC DASH MODULE. GRD
O T 7	FS - DDDL GRD
0 V	RR JCT BOX CPT GRD STUD
0 V A	BATTERY TO EQUALISER 0V
0 W	FS - WT GND & SHIELD
0 W	RS - RR JCT BOX (WCL) GRD
0 W C	RS - RR JCT BOX GRD (WCL)
0 X	RS - RR JCT BOX GRD
0 Y	ABS FR JCT BOX CPT GRD STUD
0 Y	RR JCT BOX GRD
0 Y 1	ABS SYSTEM - GRD
0 Y 2	ABS SYSTEM - GRD
0 Y 3	ABS SYSTEM - GRD

CIRCUIT NUMBER CODE

No.	DESCRIPTION
0 Y 4	ABS SYSTEM - GRD
0 Y 5	ABS SYSTEM - GRD
0 Y 6	ABS SYSTEM - GRD
0 Z	RR JCT BOX CPT GRD STUD
0 Z 0	RR JCT BOX CPT GRD STUD
0Z 1	ZF TRANSM. GRD
0Z 2	ZF TRANSM. GRD
0 0	FJB & RJB BATT. GRD
0 0 A	FBG - T.T.LT. MODULES BATT. GRD
0 0 Y	FS - ABS MODULLE BATT. GRD
0 0 S S	SOUND SYSTEM BATT. GRD
1	TACHO SYSTEM - RPM SIGNAL +
2 B	A/C & HEAT SYSTEM-COOL SIGN
2 E	A/C & HEAT SYSTEM EVAP CONT
2 F	A/C & HEAT SYSTEM EVAP CONT
4	HOSTESS & PASSENGER CHIME
4 A	HOSTESS & PASSENGER CHIME
4 B	PASSENGER CHIME
4 C	HOSTESS CHIME
5	INTERIOR LTS-AISLE & EMERG. EXIT
5	UPPER WINDSHIELD DEFROSTER
5 D	UPPER WINDSHIELD DEFROSTER
5 E	UPPER WINDSHIELD DEFROSTER
5 N	INTERIOR LTS-EMERGENCY EXIT
5 N C	SPEED SIGNAL LOWER 5MPH
5 N O	SPEED SIGNAL HIGHER 5MPH
6	INTERIOR LTS-AISLE
7 B	ENTRANCE DOOR (SEDAN)
7 D	ENTRANCE DOOR (SEDAN)
7 D A	ENTRANCE DOOR (SEDAN)
9	INTERIOR LTS-ENGINE CPT
9 A	INTERIOR LTS-ENGINE CPT
9 B	INTERIOR LTS-ENGINE CPT
9 E	INTERIOR LTS-FR SERVICE CPT
9 F	INTERIOR LTS-FR SERVICE CPT
1 0	INTERIOR LTS-LUGGAGE CPT
1 0 A	INTERIOR LTS-LUGGAGE CPT
1 0 B	INTERIOR LTS-LUGGAGE CPT
1 0 D	INTERIOR LTS-LUGGAGE CPT
1 0 F	INTERIOR LTS-LUGGAGE CPT
1 0 H	INTERIOR LTS-LUGGAGE CPT
1 0 K	INTERIOR LTS-LUGGAGE CPT
1 0 R	INTERIOR LTS-LUGGAGE DOOR AJAR
1 1	FR DESTINATION SIGN
1 1 A	FR DESTINATION SIGN
1 1 B	FR DESTINATION SIGN
1 1 C	FR DESTINATION SIGN
1 1 D	FR DESTINATION SIGN
1 1 E	FR DESTINATION SIGN
1 1 K	FR DESTINATION SIGN

No.	DESCRIPTION
1 2	12V BAT ELECTRONIC JCT BLOCK
1 2	BAT CPT 12V BATTERY
1 2 A	FR JCT BOX 12V DISC SW
1 2 A	RR JCT BOX 12V DISC SW
1 2 B	12V BAT ELECTRICAL JCT BLOCK
1 2 B	RR JCT BOX 12V DISC SW
1 2 B	FR JCT BOX 12V DISC SW
1 2 B E	BAT. EQUALIZER MONITOR
1 2 C	FR JCT BOX 12V DISC SW
1 2 C	RR JCT BOX 12V HOT WIRE
1 2 C E	RR JCT BOX 12V HOT WIRE
1 2 D	BAT CPT 12V BATTERY
1 2 D A	12V IGNITION DISTRIBUTION
1 2 D T	TTLT MODULE
1 2 D Z	ZF TRANSM. HOTWIRE
1 2 E	FR JCT BOX 12V DISC SW
1 2 E	RR JCT BOX 12V DISC SW
1 2 F	BAT CPT 12V FJB & IC
1 2 F	FR JCT BOX 12V DISC SW
1 2 G	FR JCT BOX 12V DISC SW
1 2 H	12 V IGNITION D.T.RUN LIGHT
1 2 J	FR JCT BOX 12V DISC SW
1 2 I	12V IGNITION DISTRIBUTION
1 2 I	RR JCT BOX 12V IGNITION
1 2 K	12 VOLT IGN. TTLT & HVAC MODULE
1 2 I A	12V IGNITION DISTRIBUTION
1 2 I A	FR JCT BOX 12V IGNITION
1 2 I B	FR JCT BOX 12V IGNITION
1 2 I E	ABS-FR JCT BOX 12V IGNITION
1 2 I F	FR JCT BOX 12V IGNITION
1 2 I Z	12 V IGNITION FOR ZF TRANSM.
1 2 L X	CLUSTER (12V HOT WIRE)
1 2 M	ABS-FR JCT BOX 12V DISC. SW.
1 2 P	LH CONSOLE POWER OUTLET
1 2 R	BAT CPT 12V DISC RLY TO RJB
1 2 R	MEMORY BATTERY RADIO
1 2 S	SOUND SYSTEM 12V RADIO
1 2 S 1	SOUND SYSTEM 12V RADIO
1 2 S 1 A	DVD KARAOKE FEEDING
1 2 S 2	SOUND SYSTEM 12V RADIO
1 2 S 2 A	DVD KARAOKE FEEDING
1 2 S B	SOUND SYSTEM 12V FEEDING
1 2 S S	SOUND SYSTEM 12V FEEDING
1 2 V	RR JCT BOX 12V DISC SW
1 2 V A	BATTERY TO EQUALIZER 12V
1 2 V D	12V HOT WIRE DISTRIBUTION
1 2 V F	BAT CPT 12V FJB & IC
1 2 V I	12V IGNITION DISTRIBUTION
1 2 V R	BAT CPT 12V DISC RLY TO RJB
1 2 W	12V BATTERY DDEC III

No.	DESCRIPTION
1 2 W	ENTRANCE DOOR (SEDAN)
1 2 W A	ENTRANCE DOOR (SEDAN)
1 2 W B	ENTRANCE DOOR (SEDAN)
1 2 X	FR JCT BOX 12V DISC SW
1 2 X 2	FR JCT BOX 12V DISC SW
1 2 Y	FR JCT BOX 12V DISC SW
1 3 A	ALARM & SIGNAL-LO AIR PRIM.
1 3 B	ALARM & SIGNAL-LO AIR SEC.
1 4	LAVATORY-FLUSHING PUMP
1 4 A	LAVATORY-FLUSHING PUMP
1 4 P	LAVATORY-FLUSHING PUMP
1 5	EXTERIOR LTS-MULTI FUNC LEVEL
1 5 A	WIPER & WASHER UPPER WINDSHIELD
1 6	SPEED - SIGNAL +
1 6 A	SPEED - SIGNAL +
1 6 T	SPEED - SIGNAL +
1 7	EXTERIOR LTS-FLASHER UNIT
1 7 A	EXTERIOR LTS-FLASHER UNIT
1 9	DIFFERENTIAL OIL TEMP
2 0	SPEED - SIGNAL -
2 0 T	SPEED - SIGNAL -
2 0 W	SPEED - SIGNAL -
2 1	EXTERIOR LTS-DIRECTIONAL LH
2 1 A	EXTERIOR LTS-DIRECTIONAL LH
2 1 B	EXTERIOR LTS-HAZARD
2 1 C	EXTERIOR LTS-CORNERING LH
2 1 H	EXTERIOR LTS-DIRECTIONAL LH
2 1 K	EXTERIOR LTS-CORNERING
2 1 N	EXTERIOR LTS-CORNERING LH
2 1 P	EXTERIOR LTS-CORNERING LH
2 3	EXTERIOR LTS-DIRECTIONAL RH
2 3	EXTERIOR LTS-DIRECTIONAL RH
2 3 A	EXTERIOR LTS-DIRECTIONAL RH
2 3 B	EXTERIOR LTS-DIRECTIONAL RH
2 3 C	EXTERIOR LTS-CORNERING RH
2 3 N	EXTERIOR LTS-CORNERING RH
2 3 P	EXTERIOR LTS-CORNERING RH
2 4	BAT CPT 24V BATTERY
2 4	FR JCT BOX 24V DISC SW
2 4 A	BOOSTER BLOCK 24V DISC SW
2 4 A	FR JCT BOX 24V DISC SW
2 4 A	RR JCT BOX 24V DISC SW
2 4 B	24V STARTER RLY FEEDING
2 4 B	FR JCT BOX 24V DISC SW
2 4 B A	RR JCT BOX 24V DISC SW
2 4 B C	24 VOLT BATT. CHARGER
2 4 B E	RJB CPT-BAT EQ MONITOR HOT WIRE
2 4 C	FR JCT BOX 24V DISC SW
2 4 C	RR JCT BOX 24V DISC SW
2 4 D	BAT CPT 24V HOT WIRE

No.	DESCRIPTION
2 4 D	FR JCT BOX 24V HOT WIRE
2 4 D	RR JCT BOX 24V HOT WIRE
2 4 D A	A/C JCT BOX 24V HOT WIRE
2 4 D Z	24 V HOT WIRE FOR ZF TRANSM.
2 4 E	BAT CPT 24V DISC SW
2 4 E	FR JCT BOX 24V DISC SW
2 4 E	RR JCT BOX 24V DISC SW
2 4 F	FR JCT BOX 24V DISC SW
2 4 F	RR JCT BOX 24V DISC SW
2 4 G	FR JCT BOX 24V DISC SW
2 4 G	RR JCT BOX 24V DISC SW
2 4 H	FR JCT BOX 24V DISC SW
2 4 H	RR JCT BOX 24V DISC SW
2 4 I	FR JCT BOX 24V IGNITION
2 4 I	RR JCT BOX 24V IGNITION
2 4 I A	FR JCT BOX 24V IGNITION
2 4 I B	FR JCT BOX 24V IGNITION
2 4 I B	RR JCT BOX 24V IGNITION
2 4 I C	FR JCT BOX 24V IGNITION
2 4 I C	RR JCT BOX 24V IGNITION
2 4 I F	FJB 24VOLT IGNITION
2 4 I Z	ZF TANSM. IGNITION
2 4 P	FR JCT BOX 24V DISC SW
2 4 S	24V DISC SW RLY SIGNAL
2 4 S 1	SOUND SYSTEM 24V AMPLIFIER
2 4 S 2	SOUND SYSTEM 24V AMPLIFIER
2 4 S 3	SOUND SYSTEM 24V VIDEO
2 4 S 4	SOUND SYSTEM 24V VIDEO
2 4 S B	SOUND SYSTEM 24V FEEDING
2 4 S S	SOUND SYSTEM 24V FEEDING
2 4 R	24 VOLTS FRONT CAMERA SW.
2 4 V 2	RR JCT BOX 24V DISC SW
2 4 V 3	RR JCT BOX 24V DISC SW
2 4 V 4	RR JCT BOX 24V DISC SW
2 4 V 5	RR JCT BOX 24V DISC SW
2 4 V D	24V HOT WIRE RR JCT BOX
2 4 V F	BAT CPT 24V SW TO FJB & IC
2 4 V A	BATTERY TO EQUALIZER 24V
2 4 V I	RR JCT BOX 24V IGNITION
2 4 V R	BAT CPT 24V DISC SW TO RJB
2 4 W	RR JCT BOX 24V DISC SW (WCL)
2 4 W C	BATT.CPT TO HYD. PUMP (WCL)
2 4 W L	24V BATTERY-HYD. PUMP (WCL)
2 4 Z Z	24 VOLT - ZF TRANSM. POWER
2 5	24 VOLT ALT.SIGNAL MODULE
2 5 A 1	PRE-EXITATION ALT. BOSCH #1
2 5 A 2	PRE-EXITATION ALT. BOSCH #2
2 5 A	T.T. LT. ALTERNATOR #1
2 5 B	12 VOLTS IGN. ALT. SIGNAL MODULE
2 5 D	12 V. ENGINE RUN / HVAC SYSTEM

CIRCUIT NUMBER CODE

No.	DESCRIPTION
2 5 E	USE ON VIP ONLY
2 5 F	12 VOLT IGN. DISTRIBUTION
2 5 H	24 VOLT IGN. ALT. BOSCH
2 5 K	T.T. LT. ALTERNATOR #2
2 6 A	CIGAR LIGHTER
2 6	DRIVER'S WINDOW LIFTER
2 6 B	DRIVER'S WINDOW LIFTER
2 6 C	DRIVER'S WINDOW LIFTER
2 7	LAVATORY-EMERGENCY SONALERT
2 8 A	A/C & HEAT SYSTEM-HI PRESSURE
2 8 H	TTLT HI LO PRESS
2 8 T	TTLT HI LO PRESS
2 9	A/C & HEAT SYSTEM-DRIVER'S HTR
2 9 A	A/C & HEAT SYSTEM-DRIVER'S HTR
2 9 B	A/C & HEAT SYSTEM-DRIVER'S HTR
2 9 H	HVAC DASH MODULE
2 9 X	A/C & HEAT SYSTEM-DRIVER'S HTR
3 0 A	GALLEY
3 1 A	A/C & HEAT SYSTEM-UNLOADER
3 1 B	A/C & HEAT SYSTEM-UNLOADER
3 1 B	WIPER & WASHER SYSTEM
3 1 C	WIPER & WASHER SYSTEM
3 1 D	WIPER & WASHER SYSTEM
3 1 E	WIPER & WASHER SYSTEM
3 1 J	WIPER & WASHER SYSTEM
3 1 X	WIPER & WASHER SYSTEM
3 2	EXTERIOR LTS-BACK-UP
3 2 B	EXTERIOR LTS-BACK-UP
3 2 C	BACK-UP PWR & SIGNAL
3 2 D	BACK-UP ALARM
3 5	ENTRANCE DOOR (SEDAN)
3 5 B	ENTRANCE DOOR (SEDAN)
3 5 BB	ENTRANCE DOOR (SEDAN)
3 5 D	ENTRANCE DOOR (SEDAN)
3 6	JACOB BRAKE SYSREM
3 6 A	JACOB BRAKE SYSREM
3 8	INTERIOR LTS-24V FLUORESCENT
3 8 A	INTERIOR LTS-24V FLUORESCENT
3 8 C	INTERIOR LTS-24V FLUORESCENT
3 8 D	INTERIOR LTS-24V FLUORESCENT
3 9	INTERIOR LTS-24V LH CONSOLE SW
3 9 A	INTERIOR LTS-DRIVER"S LTS
3 9 P	READING LIGHTS
4 1	A/C & HEAT SYSTEM-COND FAN MOT
4 1 A	A/C & HEAT SYSTEM-COND FAN MOT
4 1 B	A/C & HEAT SYSTEM-COND FAN MOT
4 2	A/C & HEAT SYSTEM-COND FAN MOT
4 2 A	A/C & HEAT SYSTEM-COND FAN MOT
4 3	HAT RACK FAN
4 3 A	HAT RACK FAN

No.	DESCRIPTION
4 3 B	HAT RACK FAN
4 3 D	HAT RACK FAN
4 3 E	HAT RACK FAN
4 3 F	HAT RACK FAN
4 3 G	HAT RACK FAN
4 4	EXTERIOR LTS-FOG
4 4 A	EXTERIOR LTS-FOG
4 4 B	EXTERIOR LTS-FOG
4 4 C	EXTERIOR LTS-FOG & HAZARD
4 5 A	A/C & HEAT SYSTEM-FULL AIR
4 5 B	A/C & HEAT SYSTEM-WATER PUMP
4 5 C	A/C & HEAT SYSTEM-WATER VALVE
4 5 D	A/C & HEAT SYSTEM-WATER VALVE
4 5 E	A/C & HEAT SYSTEM-HEAT 1 SIGN
4 5 G	A/C & HEAT SYSTEM-DRIVER'S HTR
4 5 H	A/C & HEAT SYSTEM-DRIVER'S HTR
4 5 W	A/C & HEAT SYSTEM-COND. DOOR AJAR
4 6	EXTERIOR LTS-MARKER
4 6 A	EXTERIOR LTS-MARKER
4 6 B	EXTERIOR LTS-MARKER
4 6 B	EXTERIOR LTS-MARKER
4 6 C	EXTERIOR LTS-MARKER
4 7	A/C & HEAT SYSTEM-DRIVER'S HTR
4 8	ENTRANCE DOOR (SEDAN)
4 8 A	ENTRANCE DOOR (SEDAN)
4 9	ENTRANCE DOOR (SEDAN)
4 9 A	ENTRANCE DOOR (SEDAN)
5 2	ALARM & SIGNAL-ELEC. HORN
5 2 A	ALARM & SIGNAL-ELEC. HORN
5 2 B	ALARM & SIGNAL- AIR HORN
5 2 C	ALARM & SIGNAL- AIR HORN
5 3	ALARM & SIGNAL-ELEC. HORN
5 3 A	WIPER & WASHER SYSTEM
5 3 B	WIPER & WASHER SYSTEM
5 3 C	WIPER & WASHER SYSTEM
5 3 E	WIPER & WASHER SYSTEM
5 3 J	WIPER & WASHER SYSTEM
5 5	EXTERIOR LTS-HI BEAM
5 7	EXTERIOR LTS-HI BEAM
5 7 A	A/C & HEAT SYSTEM-WATER PUMP
5 7 A	EXTERIOR LTS-HI BEAM
5 7 B	A/C & HEAT SYSTEM-WATER PUMP
5 7 C	PRE-HEAT WATER HEATER
5 8	EXTERIOR LTS-LO BEAM
5 8 A	EXTERIOR LTS-LO BEAM
5 8 B	EXTERIOR LTS-LO BEAM
5 8 E	EXTERIOR LTS-LO BEAM
5 9 A	JACOB BRAKE SYSTEM
6 1	EXTERIOR LTS-24V FEED SW

No.	DESCRIPTION
6 1 A	EXTERIOR LTS-HEAD SIGNAL
6 2	LAVATORY-OCCUPIED LT
6 2 A	LAVATORY-FLUOR LT
6 2 B	LAVATORY-FLUOR LT
6 2 E	LAVATORY-OCCUP & FLUOR LT
6 3	EXTERIOR LTS-CLEARANCE
6 3 A	EXTERIOR LTS-CLEARANCE
6 3 B	EXTERIOR LTS-CLEARANCE
6 3 C	EXTERIOR LTS-MARKER SIGNAL
6 3 D	EXTERIOR LTS-MARKER & TAIL
6 3 E	EXTERIOR LTS-CLEARANCE
6 3 F	EXTERIOR LTS-MARKER BLINKER
6 3 H	EXTERIOR LTS-TAIL
6 4	DRIVERS FAN
6 5	FOOT DAMPER MOTOR
6 5 A	FOOT DAMPER MOTOR
6 5 D	DRIVER REC. DAMPER
6 6	O_PASS. ON/OFF
6 7	24 VOLT RUN DISTRIBUTION
6 7 A	A/C & HEAT SYSTEM
6 7 C	HEATING WINDSHIELD
6 7 K	A/C & HEAT SYSTEM-COND FAN CTR
6 7 L	A/C & HEAT SYSTEM-COND FAN CTR
6 7 X	A/C & HEAT SYSTEM
6 8	DASH & DEFROST DAMPER MOTOR
6 8 A	DASH & DEFROST DAMPER MOTOR
7 0	INTERIOR LTS-HAT RACK & RR RUN.
7 2	SUN VISOR-FEEDING
7 2 A	SUN VISOR-RH
7 2 B	SUN VISOR-RH
7 2 C	SUN VISOR-LH
7 2 D	SUN VISOR-LH
7 3	LAVATORY-FEEDING
7 4	INTERIOR LTS-READING RH
7 4 A	INTERIOR LTS-READING RH
7 4 B	INTERIOR LTS-READING RH
7 4 D	INTERIOR LTS-READING SIGNAL
7 5	INTERIOR LTS-READING LH
7 5 A	INTERIOR LTS-READING LH
7 6	FUEL TANK GAUGE
7 6 B	LOW FUEL LT & ETHER COLD START
7 6 C	LOW FUEL LT
7 6 P	FUEL PRIME PUMP
7 6 M	FUEL PRIME PUMP
7 7 B	A/C & HEAT SYSTEM-COMPRESSOR
7 7 C	A/C & HEAT SYSTEM-COMPRESSOR
7 7 H	A/C & HEAT SYSTEM-COMPRESSOR
8 1	EXTERIOR LTS-STOP SW
8 2	EXTERIOR LTS-STOP SIGNAL
8 2 A	EXTERIOR LTS-STOP SIGNAL

No.	DESCRIPTION
8 2 B	EXTERIOR LTS-STOP LTS
8 2 K	EXTERIOR LTS-STOP PARK BRK
8 2 L	EXTERIOR LTS-LH STOP
8 2 R	EXTERIOR LTS-LH STOP
8 3	ENGINE CTR-KEY SW ACCES SIGN
8 4	ENGINE CTR-KEY SW ACCES SIGN
8 5	ENGINE CTR-KEY SWIGNITION SIGN
8 5	24V IGNITION SIGNAL
8 5 A	24V IGN DASH INSTRUMENTATION
8 5 B	ENGINE CTR-24V IGNITION
8 5 C	PARKING BRAKE SWITCH
8 5 E	STOP LIGHT RLY
8 5 F	ENGINE CTR-ENGINE CTR SW IGN
8 5 F	LO AIR SONALERT
8 5 G	RADIATOR FAN CLUTCH
8 5 X	12V IGN ABS
8 5 Y	ABS SYSTEM
8 6	ENGINE CTR-STARTER SOL SIGN
8 6 A	ENGINE CTR-STARTER SOL SIGN
8 6 F	ENGINE CTR-STARTER TTLT SIGN
8 6 T	ENGINE CTR-STARTER TTLT SIGN
8 8	ENGINE CTR-RR START SIGNAL
8 9	ENGINE CTR-RR START SIGNAL
9 0 B	A/C & HEAT SYSTEM-COND FAN MOT
9 0 B	ENGINE CTR-MAST KEY SW FEED
9 0 C	A/C & HEAT SYSTEM-COND FAN MOT
9 0 F	CHARG SYST-VOLTAGE REGUL. "B"
9 0 H	A/C & HEAT SYSTEM-EVAP FAN MOT
9 1	PARKING BRAKE SW SIGNAL
9 1 A	DDEC-FAST IDLE SIGNAL
9 1 S	SONALERT PARKING BRAKE
9 1 W	PARK, BRAKE SW SIGN (WCL)
9 2	BATTERY EQUALIZER-CHECK BALANCE
9 3	BATTERY EQUALIZER-CHECK LO/HI
9 5 A	ENGINE BRAKE & RETARDER SYSTEM
9 7	TACHOMETER (-)
1 0 0	INTERIOR LTS-GENERAL
1 0 0 A	INTERIOR LTS-GENERAL
1 0 0 B	INTERIOR LTS-GENERAL
1 0 1	24V STARTER SOL FEEDING
1 0 1	WORLD TRANSM-LO SIGN SOL. LO
1 0 2	WORLD TRANSM-SOL. SUPPLY
1 0 2 A	24V STARTER TO BOSCH ALTERNATOR
1 0 3	LOW BUOY
1 0 4	WORLD TRANSM-SOL. FORWARD
1 0 5	WORLD TRANSM-RETARDER & SUMP
1 0 5 W	WORLD TRANSM-RETARDER & SUMP
1 0 6	WORLD TRANSM-OIL LEVEL HI
1 0 7	WORLD TRANSM-LOCKUP SOL. HI
1 0 8	WORLD TRANSM-REM. PWR WAKE UP

CIRCUIT NUMBER CODE

No.	DESCRIPTION
109	WORLD TRANSM-RET. SOL. LO
110	ALARM & SIGNAL-WATER TEMP
110	WORLD TRANSM-LOCKUP SOL. LO
111	WORLD TRANSM-SOL. C6
112	WORLD TRANSM-SPARE OUTPUT (+)
113	ALARM & SIGNAL-OIL PRESS
113	WORLD TRANSM-REVERSE WARNING
113W	WORLD TR.-REVERSE WARNING
113Z	ZF TRANSM.- REVERSE SIGNAL
114	INTERIOR LTS-DASH LT REGUL.
114	WORLD TRANSM-SPARE OUTPUT (-)
114A	INTERIOR LTS-DASH LT
114B	INTERIOR LTS-DASH LT REGUL.
114D	INTERIOR LTS-DASH LT REGUL.
114E	INTERIOR LTS-DASH LT REGUL.
115	ALARM & SIGNAL-TAG PRESS
115	DDEC III-COOLANT LEVEL
115	WORLD TRANSM-DO NOT SHIFT SIGN
115C	DDEC III-COOLANT LEVEL
115W	WORLD TRANSM-DO NOT SHIFT SIGN
115W	ZF TRANSM. - CHECK TRANSM. TTLT
116	WORLD TRANSM-LO SIGNAL SOL. HI
116B	A/C & HEAT SYSTEM-DRIVER'S HTR
117	WORLD TRANSM-SPARE INPUT (-)
117A	ALARM & SIGNAL-TRANSM OIL TEMP
117A	ALARM & SIGNAL-TRANSM OIL TEMP
118	WORLD TRANSM-SPARE INPUT (+)
119	WORLD TRANSM-ENG BRK INPUT (+)
120	WORLD TRANSM-SOL. C1
121	WORLD TRANSM-SOL. GRD 2
122	A/C & HEAT SYSTEM-DRIVER'S HTR
122	A/C & HEAT SYSTEM-FRESH AIR
122	WORLD TRANSM-SOL. GRD 4
122A	A/C & HEAT SYSTEM-FRESH AIR
123	WORLD TRANSM-NEUTRAL START
123A	ALARM & SIGNAL-FIRE DETECTOR
123B	ALARM & SIGNAL-FIRE DETECTOR
124	WORLD TRANSM-THROTTLE (HI)
125	WORLD TRANSM-RET. INDICATOR
125	GALLEY LAMP
125T	GALLEY LAMP
125W	WORLD TRANSM-RET. INDICATOR
126	KNEELING SYSTEM
126A	KNEELING SYSTEM
126B	KNEELING SYSTEM
126C	KNEELING SYSTEM
126D	KNEELING SYSTEM
126E	KNEELING SYSTEM
126F	KNEELING SYSTEM
126F1	KNEELING SYSTEM

No.	DESCRIPTION
126G	KNEELING SYSTEM
126H	KNEELING SYSTEM
126K	KNEELING SYSTEM
126P	KNEELING SYSTEM
126R	KNEELING SYSTEM
126W	5 MPH N.C. SIGNAL (WCL)
126S	KNEELING SYSTEM
126T	KNEELING SYSTEM
127	WORLD TRANSM-LUBE PRESS SW.
127	WORLD TRANSM-RETARDER FEED SOL.
127	POWER- PRE-HEAT WATER HEATER
127A	PRE-HEAT WATER HEATER
128A	PRE-HEAT WATER HEATER
128B	PRE-HEAT - BURNER ON SIGNAL
128	WORLD TRANSM-SOL. C2
129	POWER- PRE-HEAT WATER HEATER
129B	POWER- PRE-HEAT WATER HEATER
129	WORLD TRANSM-SOL. C5
130	A/C & HEAT SYSTEM-EVAP FAN MOTOR
130	WORLD TRANSM-SOL. GRD 3
131	WORLD TRANSM-SOL. C4
132	WORLD TRANSM-ENG BRK OUTPUT (-)
132W	WORLD TRANSM-ENG BRK OUTPUT (-)
133	GALLEY-HEAT CONTAINERS
133A	GALLEY-HEAT CONTAINERS
133B	GALLEY-HEAT CONTAINERS
133C	GALLEY-HEAT CONTAINERS
133	WORLD TRANSM-RET. ACTUATOR HI
134	GALLEY-HEAT CONTAINERS
134A	GALLEY-HEAT CONTAINERS
134	WORLD TRANSM-RET. APPLY SOL. HI
135	A/C & HEAT SYSTEM-AIR SENSOR
135A	A/C & HEAT SYSTEM-AIR SENSOR
135	WORLD TRANSM-ANALOG GRD
135D	WORLD TRANSM-RETARDER RES MOD
135C	WORLD TRANSM-RETARDER TEMP
136	GALLEY-ACCESSORIES
136	WORLD TRANSM-ECU POWER
136V	WORLD TRANSM-12V BATTERY
136W	WORLD TRANSM-12V BATTERY
136X	WORLD TRANSM-12V BATTERY
137	WORLD TRANSM-RETARDER
137A	MIRROR (SPARTAN & RAMCO)
137B	RR VIEW MIRROR (SPARTAN)
137C	RR VIEW MIRROR (SPARTAN)
137D	RR VIEW MIRROR (SPARTAN)
137E	RR VIEW MIRROR (SPARTAN)
137G	RR VIEW MIRROR (SPARTAN)
138	ABS SYSTEM
138	WORLD TRANSM-RETARDER TEMP

No.	DESCRIPTION
138A	ABS SYSTEM
139	ABS SYSTEM
139	WORLD TRANSM-OUTPUT SPEED HI
140	ABS SYSTEM
140	WORLD TRANSM-OUTPUT SPEED LO
141	ABS SYSTEM
141	WORLD TRANSM-ENGINE SPEED HI
142	ABS SYSTEM
142	WORLD TRANSM-SERIAL COM. A
143	ABS SYSTEM
143	WORLD TRANSM-ECU BATTERY GRD
143A	ABS SYSTEM
143W	WORLD TRANSM-BATTERY GRD
144	ABS SYSTEM
144	WORLD TRANSM-ECU CHASSIS GRD
144A	ABS SYSTEM
145	ABS SYSTEM
146	ABS SYSTEM
146A	TRANSMISSION-12V IGNITION
146	WORLD TRANSM-IGNITION SENSE
146W	WORLD TRANSM-12V IGNITION
146X	WORLD TRANSM-12V IGNITION
147	ABS SYSTEM
147	WORLD TRANSM-OIL TEMP
147A	ETHER COLD START & D.R.L.
147C	ETHER COLD START
148	ABS SYSTEM
148	WORLD TRANSM-OUTPUT SPEED LO
149	ABS SYSTEM
149	WORLD TRANSM-TURBINE SPEED HI
149A	ABS SYSTEM
150	DDEC III-ECM BATTERY GRD
150	WORLD TRANSM-ENGINE SPEED LO
150A	DDEC III-ECM BATTERY GRD
151	ABS SYSTEM
151	DDEC III-ECM BATTERY GRD
151	WORLD TRANSM-SERIAL COM. B
152	ABS SYSTEM
153	WORLD TRANSM-SPARE INPUT (-)
154	ABS SYSTEM
154	WORLD TRANSM-ABS RET. INPUT
155	WORLD TRANSM-SPARE INPUT (-)
156	WORLD TRANSM-THROTTLE POS.
156A	ABS SYSTEM
157	WORLD TRANSM-SPEEDO SIGNAL
157B	ABS SYSTEM
157D	A.T.C. SYSTEM
157E	A.T.C. SYSTEM
157F	A.T.C. SYSTEM
158	WORLD TRANSM-DIMMER

No.	DESCRIPTION
160	ALARM & SIGNAL-TAG PRESS SW
160	WORLD TRANSM-SER. INTERFACE (-)
161	WORLD TRANSM-SIGNAL GRD
161B	WORLD TRANSM-SIGNAL GRD
162	WORLD TRANSM-PRESS. SW C3
163	WORLD TRANSM-RETARDER ENABLE
164	WORLD TRANSM-RET. ACTUATOR SIGN
165	A/C & HEAT SYSTEM-TRANSMITER
165	WORLD TRANSM-OIL LEVEL SIGNAL
166B	A/C & HEAT SYSTEM-EVAP. MOD.
167	W. TR.-OUT SPEED INTERLOCK
167Z	ZF- OUT SPEED INTERLOCK
168	A/C & HEAT SYSTEM-HUMIDISTAT
168	WORLD TRANSM-SER. INTERFACE (+)
168A	A/C & HEAT SYSTEM-HUMIDISTAT
170	LUGGAGE DOOR LOCK
170C	LUGGAGE DOOR LOCK
170E	LUGGAGE DOOR LOCK
170H	LUGGAGE DOOR LOCK
181A	THERMOMETER INSIDE SENSOR
181B	THERMOMETER INSIDE SENSOR
181C	THERMOMETER OUTSIDE SENSOR
181D	THERMOMETER OUTSIDE SENSOR
197	FUEL WATER FILTER
197A	FUEL WATER FILTER
197B	FUEL WATER FILTER
198	FILTER FUEL HEATER
199	AIR FILTER RESTRICTION SENDER
201	WORLD TRANSM-SPARE
202	WORLD TRANSM-SPARE
203	WORLD TRANSM-SPARE
204	WORLD TRANSM-SPARE
205	WORLD TRANSM-SPARE
206	WORLD TRANSM-SPARE
214	WORLD TRANSM-BACK UP SIGNAL
225	LAVATORY FAN
225A	LAVATORY FAN
231	NEUTRAL SIGNAL GRD
231A	NEUTRAL COIL RELAY FEED SIGNAL
231W	NEUTRAL SIGNAL GRD (WCL)
231Z	ZF NEUTRAL SIGNAL GRD
240	DDEC III-ECM 12V FEEDING
241	DDEC III-ECM 12V FEEDING
251A	DDEC III - DATA LOGGER 12 H.W.
251	DDEC III - PRODRIVER 12V H.W.
253	GALLEY-MICROWAVE
254	GALLEY-12V FRIGO NORCOLD
254A	GALLEY-FRIGO
255	GALLEY-COFEEMAKER
255A	GALLEY-COFEEMAKER

CIRCUIT NUMBER CODE

No.	DESCRIPTION
257	WINDSHIELD HEATED
257 A	WINDSHIELD HEATED
257 B	WINDSHIELD HEATED
257 C	WINDSHIELD HEATED
257 D	WINDSHIELD HEATED SPARE
257 E	WINDSHIELD HEATED SPARE
258	WINDSHIELD HEATED
258 A	WINDSHIELD HEATED
259	WINDSHIELD HEATED
259 A	WINDSHIELD HEATED
260	WINDOW AJAR
290	FAN CLUTCH RADIATOR
290	FAN CLUTCH RADIATOR
291	FAN CLUTCH RADIATOR SPD 1
292	FAN CLUTCH RADIATOR SPD 2
300	DOOR AJAR MAGN.SW. (WCL)
300 A	POWER SYSTEM SW. (WCL)
300 B	DOOR AJAR ALARM (WCL)
301	POWER SYSTEM SW. (WCL)
302	DOOR AJAR T.T.LT. (WCL)
302 A	DOOR AJAR ALARM SIGN.(WCL)
302 B	DOOR AJAR MAGN.SW. (WCL)
303	REMOTE WALL SW. DWN (WCL)
304	REMOTE WALL SW. UP (WCL)
305	PARK. BRAKE SOL. VALVE (WCL)
305 A	PARK. BRAKE SAFETY SW. (WCL)
305 A1	DOOR AJAR - PARK. BRAKE (WCL)
306	CONTROL SYSTEM (WCL RICON)
307	CONTROL SYSTEM (WCL RICON)
308	CONTROL SYSTEM (WCL RICON)
309	CONTROL SYSTEM (WCL RICON)
310	EATON TRANSMISSION
311	EATON TRANSMISSION
312	EATON TRANSMISSION
313	EATON TRANSMISSION
314	EATON TRANSMISSION
315	EATON TRANSMISSIOM
316	EATON TRANSMISSION - EPL
317	EATON TRANSMISSION
318	EATON TRANSMISSION
319	EATON TRANSMISSION
320	EATON TRANSMISSION
321	EATON TRANSMISSION
322	EATON TRANSMISSIION
323	EATON TRANSMISSION
324	EATON TRANSMISSION
325	EATON TRANSMISSION
326	EATON TRANSMISSION
327	EATON TRANSMISSION
328	EATON TRANSMISSION

No.	DESCRIPTION
329	EATON TRANSMISSION
330	EATON TRANSMISSION - EPL
331	EATON TRANSMISSION - EPL
332	EATON TRANSMISSION
333	EATON TRANSMISSION - 12V BATTERY
334	EATON GENERATION 2
416	DDEV IV- SENSOR SUPPLY 5VDC
417	DDEC III-LIMIT SPEED GOVERNOR
419	DDEC III-CHECK ENGINE LIGHT
439	DDEC III-12V IGNITION
440	DDEC III-12V IGNITION
440 A	DDEC III-12V IGNITION
451	DDEC III-A/C FAN CLUTCH
452	DDEC IV- SENSOR RETURN (ENGINE)
505	DDEC III-TACHOMETER DRIVE
509	DDEC III-STOP ENGINE LIGHT
510	DDEC III-FAST IDLE SIGNAL
524	DDEC III-ENGINE BRAKE DISABLE
524 B	ZF SIGNAL – AUX. SENSOR THROTTLE
525	DDEC III-FAST IDLE SIGNAL
528	DDEC III-STOP ENG. OVERRIDE
531	DDEC III-CRUISE CLUTCH RELEASE
541	DDEC III-CRUISE SET SW
543	DDEC III-CRUISE STOP SW CUT IN
544	DDEC III-CRUISE ON/OFF SW
545	DDEC III-CRUISE RESUME SW
555	DDEC III-FAN CLUTCH SPEED# 1
556	DDEC III-VEHICLE SPEED (+)
557	DDEC III-VEHICLE SPEED (-)
563	DDEC III-FAN CLUTCH SPEED# 2
564	DDEC III-DIGITAL OUTPUT
564 B	DDEC III-DIGITAL OUTPUT
565	DDEC III-ENGINE BRAKE ACTIVE
565 Z	DECELERATION LTS
583	DDEC III-ENGINE BRAKE 4 CYL.
700	J1587(+)
701	J1587(-) – GROUND
705	ZF SIGNALS
706	ZF SIGNALS
707	ZF SIGNALS
717	ZF SIGNALS
718	ZF SIGNALS
719	ZF SIGNALS
720	ZF SIGNALS
740	EASY START VALVE
761	ZF SIGNALS

No.	DESCRIPTION
900	DDEC III-DATA LINK (+)
901	DDEC III-DATA LINK (-)
905	DDEC IV- AMBIANT AIR TEMPERATURE
908	DDEC III-HYDRAULIC PWM#1 OUTPUT
916	DDEC III-SENSOR SUPPLY (5VDC)
925	J1939-HIGH
926	J1939-LOW
927	J1939-SHIELD
952	DDEC III-SENSOR RETURN #1
953	DDEC III-SENSOR RETURN #2
953 A	THROTTLE INHIBIT
976	DDEC IV- RELATIVE HUMIDITY
979	DDEC III-ENGINE BRAKE 2 CYL.
988	DDEC III-CRUISE ENABLE LTS.

No.	DESCRIPTION

CIRCUIT NUMBER CODE

No.	DESCRIPTION
B A	INTERIOR LTS-110V FLUORESCENT
B B	INTERIOR LTS-110V FLUORESCENT
D 1	SOUND SYSTEM-FR RH SPEAKER
D 2	SOUND SYSTEM-FR RH SPEAKER
D 3	SOUND SYSTEM-FR RH SPEAKER
D 4	SOUND SYSTEM-RR RH SPEAKER
D 5	SOUND SYSTEM-RR RH SPEAKER
D 6	SOUND SYSTEM-RR RH SPEAKER
D 7	SOUND SYSTEM-RR RH SPEAKER
D 8	SOUND SYSTEM-RR RH SPEAKER
D 3 4	SOUND SYSTEM-RR RH SPEAKER
D 6 7	SOUND SYSTEM-RR RH SPEAKER
G 1	SOUND SYSTEM-FR LH SPEAKER
G 2	SOUND SYSTEM-FR LH SPEAKER
G 3	SOUND SYSTEM-FR LH SPEAKER
G 4	SOUND SYSTEM-RR LH SPEAKER
G 5	SOUND SYSTEM-RR LH SPEAKER
G 6	SOUND SYSTEM-RR LH SPEAKER
G 7	SOUND SYSTEM-RR LH SPEAKER
G 8	SOUND SYSTEM-RR LH SPEAKER
G 3 4	SOUND SYSTEM-RR LH SPEAKER
G 6 7	SOUND SYSTEM-RR LH SPEAKER
L 1 A	INTERIOR LTS-110V FLUORESCENT
L 1 B	INTERIOR LTS-110V FLUORESCENT
L 2 A	INTERIOR LTS-110V FLUORESCENT
L 2 B	INTERIOR LTS-110V FLUORESCENT
L 0	110V RECEPTACLE- 110V FLUOR.
L 1	110V RECEPTACLE- 110V FLUOR.
L 2	110V RECEPTACLE- 110V FLUOR.
R A	INTERIOR LTS-110V FLUORESCENT
R B	INTERIOR LTS-110V FLUORESCENT
S H 1	SHIELD CHASSIS GRD
S H 2	SHIELD CHASSIS GRD
S H 3	SHIELD CHASSIS GRD
S H 4	SHIELD CHASSIS GRD
S P 2	SPARE-FJB TO FR SERV CPT
S P 3	SPARE-FJB TO CENTER DASH
S P 4	SPARE-FJB TO CENTER DASH
S P 5	SPARE-RJB TO LUGG CPT #2
S P 6	SPARE-RJB TO LUGG CPT #1
S P 7	SPARE-RJB TO LUGG CPT #1
S P 8	SPARE-RJB TO LUGG CPT #1
S P 9	SPARE-RJB TO LUGG CPT #2
S P 10	SPARE-RJB TO LUGG CPT #1
S P 11	SPARE-FJB TO RJB
S P 12	SPARE-RJB TO ENGINE
S P 13	SPARE-RJB TO ENGINE
S P 14	SPARE-FJB TO RJB
S P 15	SPARE-RJB TO ENGINE
S P 16	SPARE-RJB TO ENGINE

No.	DESCRIPTION
S P 17	SPARE-RJB TO ENGINE
S P 18	SPARE-FJB TO RJB
S P 24	SPARE-RJB TO LAVATORY ROOF
S P 25	SPARE-RJB TO LAVATORY ROOF
S P 26	SPARE-RJB TO LAVATORY ROOF
S P 27	SPARE-RJB TO LH HAT RACK
S P 28	SPARE-RJB TO LH HAT RACK
S P 31	SPARE-RJB TO RH HAT RACK
S P 32	SPARE-RJB TO RH HAT RACK
S P 33	SPARE-FJB TO RJB
S P 38	SPARE-FJB TO RJB
S P 43	SPARE-FJB TO RJB
S P 45	SPARE-FJB TO RJB
S P 46	SPARE-RJB TO LH FR ROOF
S P 48	SPARE-RJB TO DASH CENTER PANEL
S P 56	SPARE-ENGINE TO RH SW PANEL
S P 57	SPARE-DASH CENTER PANEL TO ENG.
S P 58	SPARE-DASH CENTER PANEL TO ENG.
S P 59	SPARE-FJB TO ENGINE
S P 61	SPARE-FJB TO DASH RH PANEL
S P 68	SPARE-FJB TO ENGINE
S P 69	SPARE-FJB TO FR AXLE
S P 70	SPARE-FJB TO FR AXLE
S P 71	SPARE-FJB TO RH SW PANEL
S P 72	SPARE-FJB TO FR SERV CPT
S P 74	SPARE-FJB TO LH CONSOLE
S P 77	SPARE-FJB TO EVAPORATOR CPT
S P 78	SPARE-FJB TO CONDENSER CPT
S P 79	SPARE-FJB TO CONDENSER CPT
S P 87	SPARE-RJB TO LH HAT RACK
S P 88	SPARE-RJB TO RH HAT RACK
S P 92	SPARE-RJB TO CONDENSER CPT
S P 93	SPARE-RJB TO EVAPORATOR CPT
S P 94	SPARE-RJB TO RR ROOF
S P 95	SPARE-RJB TO RR ROOF
S P 96	SPARE-RJB TO LUGG CPT #2
S P 97	SPARE-RJB TO LUGG CPT #3
S P 98	SPARE-RJB TO LUGG CPT #3
S P 104	SPARE-RJB TO ENGINE CPT
S P 105	SPARE-FJB TO ENGINE
S P 106	SPARE-RJB TO BATT. CPT.
S P 107	SPARE-RJB TO BATT. CPT.
S P 108	SPARE-RJB TO BATT. CPT.
S P 109	SPARE-RJB TO ENGINE CPT.
S P 110	SPARE-RJB TO ENGINE CPT.
S P 111	SPARE-RJB TO ENGINE CPT.
S P 112	SPARE-RJB TO ENGINE CPT.
S P 114	SPARE-FJB TO U/DASH WIPER
S P 115	SPARE-FJB TO U/DASH WIPER
S P 116	SPARE-FJB TO U/DASH FLOOR

No.	DESCRIPTION
S P 117	SPARE-FJB TO U/DASH FLOOR
S P 119	SPARE-RJB TO ENGINE CPT.
SPZ 1	SPARE WIRE-ZF TRANSM.
SPZ 2	SPARE WIRE-ZF TRANSM.
SPZ 3	SPARE WIRE-ZF TRANSM.
SPZ 4	SPARE WIRE-ZF TRANSM.
SPZ 5	SPARE WIRE-ZF TRANSM.
SPZ 6	SPARE WIRE-ZF TRANSM.
W C	A/C & HEAT SYST-EVAP CTR SIGN
Y C	INTERIOR LTS-110V FLUORESCENT
Y D	INTERIOR LTS-110V FLUORESCENT
0	BC - BAT. CPT CHASSIS GRD
0	CONDENSER CPT GRD
0	RS - RR JCT BOX RLY GRD
0	GALLEY GRD
0 A	BC - SHIELD GRD
0 A	RS - RR JCT BOX RLY GRD
0 A	FRS - FR ROOF ACCES. GRD
0 A	RS - LUG. CPT ACCES. GRD
0 A	A/C SYSTEM-EVAP. GRD
0 A A	RS - VOLTAGE REGULATOR GRD
0 B 1	EC – RR JCT PANEL GRD
0 B	EC - ENGINE GRD
0 B	FRS - FR ROOF HEAT WIND GRD
0 B	RS - LUG. CPT ACCES. GRD
0 B E	RJB - BAT. EQUAL. BAT GRD
0 C	EC - STARTER MOTOR GRD
0 C	FS - SERV. CPT ACCES. GRD
0 C	BC - FAN EVAP. & CONDENSER GRD
0 C R	24V DISC. SW. RLY GRD SIGNAL
0 C S	24V DISC. SW. RLY GRD SIGNAL
0 C 1	FS - SERV. CPT ACCES. GRD
0 C 2	FS - SERV. CPT ACCES. GRD
0 C 3	FS - SERV. CPT ACCES. GRD
0 C 4	FS - FJB CPT ACCES. GRD
0 D	BC - FAN CONDENSER GRD
0 D	RS - HAT RACK ACCES. LH GRD
0 D	RJB – IGNITION RELAY
0 D F	RS - RR SIDE FLASH & MARK GRD
0 D R	RS - RJB DOCKING LT RESISTORS
0 E	RS - HAT RACK ACCES. LH GRD
0 E A	EATON TRANSMISSION GRD
0 F	RS - HAT RACK ACCES. RH GRD
0 G	RS - HAT RACK ACCES. RH GRD
0 H	RS - LAVATORY ACCES. GRD
0 J	FS - LH CONSOLE SW GRD
0 J	RS - RR ROOF ACCES. GRD
0 K	RS - RR ROOF ACCES. GRD
0 K	RS - RJB A/C JCT PANEL GRD
0 L	FS - FR SERVICE CPT LTS GRD

No.	DESCRIPTION
0 L 1	FS - FR SERVICE CPT LTS GRD
0 L 2	FS - FR SERVICE CPT LTS GRD
0 L 3	FS - FJB GRD
0 L 4	FS - FJB GRD
0 L 5	FS - CIGAR LIGHTER
0 L 6	FS - FRONT SERVICE CPT LTS GRD
0 L	RS - ENGINE CPT ACCES. GRD
0 L	ENTRANCE DOOR (SEDAN) GRD
0 L H	RS - RR END LAMPS LH GRD
0 M	FS - ELECTRICAL MOTOR GRD
0 M 1	FS - ELECTRICAL MOTOR GRD
0 M 3	FS - ELECTRICAL MOTOR GRD
0 M 4	FS - ELECTRICAL MOTOR GRD
0 M 5	FS - ELECTRICAL MOTOR GRD
0 M 6	FS - FJB GRD
0 M 7	FS - ELECTRICAL MOTOR GRD
0 M	RS - ENGINE CPT ACCES. GRD
0 M R	24V DISC. SW. RLY GRD SIGNAL
0 M S	24V DISC. SW. RLY GRD SIGNAL
0 N	RS - ENGINE CPT ACCES. GRD
0 P	RS - ENGINE CPT ACCES. GRD
0 R	FS - SOUND SYS. JCT PANEL GRD
0 R	RS - RJB GRD
0 R	RS - ENGINE CPT ACCES. GRD
0 R E	RADIO &CTRL HEAD CHASSIS GRD
0 R H	RS - RR END LAMPS RH GRD
0 S	12 VOLT RUN - GND RELAY
0 S A	EC-BOSCH ALT. GROUND
0 S 2	SOUND SYSTEM RADIO GRD
0 S 3	SOUND SYSTEM VIDEO GRD
0 S S	SOUNS SYSTEM BATT. GRD
0 T	FS - DASH ACCES. GRD
0 T 1	FS - DASH ACCES. GRD
0 T 2	FS - DASH ACCES. GRD
0 T 3	FS - DASH ACCES. GRD
0 T 4	FS - DASH ACCES. GRD
0 T 5	FS - HVAC DASH MODULE. GRD
O T 6	FS - HVAC DASH MODULE. GRD
O T 7	FS - DDDL GRD
0 V	RR JCT BOX CPT GRD STUD
0 V A	BATTERY TO EQUALISER 0V
0 W	FS - WT GND & SHIELD
0 W	RS - RR JCT BOX (WCL) GRD
0 W C	RS - RR JCT BOX GRD (WCL)
0 X	RS - RR JCT BOX GRD
0 Y	ABS FR JCT BOX CPT GRD STUD
0 Y	RR JCT BOX GRD
0 Y 1	ABS SYSTEM - GRD
0 Y 2	ABS SYSTEM - GRD
0 Y 3	ABS SYSTEM - GRD

CIRCUIT NUMBER CODE

No.	DESCRIPTION
0 Y 4	ABS SYSTEM - GRD
0 Y 5	ABS SYSTEM - GRD
0 Y 6	ABS SYSTEM - GRD
0 Z	RR JCT BOX CPT GRD STUD
0 Z 0	RR JCT BOX CPT GRD STUD
0Z 1	ZF TRANSM. GRD
0Z 2	ZF TRANSM. GRD
0 0	FJB & RJB BATT. GRD
0 0 A	FBG - T.T.LT. MODULES BATT. GRD
0 0 Y	FS - ABS MODULLE BATT. GRD
0 0 S S	SOUND SYSTEM BATT. GRD
1	TACHO SYSTEM - RPM SIGNAL +
2 B	A/C & HEAT SYSTEM-COOL SIGN
2 E	A/C & HEAT SYSTEM EVAP CONT
2 F	A/C & HEAT SYSTEM EVAP CONT
4	HOSTESS & PASSENGER CHIME
4 A	HOSTESS & PASSENGER CHIME
4 B	PASSENGER CHIME
4 C	HOSTESS CHIME
5	INTERIOR LTS-AISLE & EMERG. EXIT
5	UPPER WINDSHIELD DEFROSTER
5 D	UPPER WINDSHIELD DEFROSTER
5 E	UPPER WINDSHIELD DEFROSTER
5 N	INTERIOR LTS-EMERGENCY EXIT
5 N C	SPEED SIGNAL LOWER 5MPH
5 N O	SPEED SIGNAL HIGHER 5MPH
6	INTERIOR LTS-AISLE
7 B	ENTRANCE DOOR (SEDAN)
7 D	ENTRANCE DOOR (SEDAN)
7 D A	ENTRANCE DOOR (SEDAN)
9	INTERIOR LTS-ENGINE CPT
9 A	INTERIOR LTS-ENGINE CPT
9 B	INTERIOR LTS-ENGINE CPT
9 E	INTERIOR LTS-FR SERVICE CPT
9 F	INTERIOR LTS-FR SERVICE CPT
1 0	INTERIOR LTS-LUGGAGE CPT
1 0 A	INTERIOR LTS-LUGGAGE CPT
1 0 B	INTERIOR LTS-LUGGAGE CPT
1 0 D	INTERIOR LTS-LUGGAGE CPT
1 0 F	INTERIOR LTS-LUGGAGE CPT
1 0 H	INTERIOR LTS-LUGGAGE CPT
1 0 K	INTERIOR LTS-LUGGAGE CPT
1 0 R	INTERIOR LTS-LUGGAGE DOOR AJAR
1 1	FR DESTINATION SIGN
1 1 A	FR DESTINATION SIGN
1 1 B	FR DESTINATION SIGN
1 1 C	FR DESTINATION SIGN
1 1 D	FR DESTINATION SIGN
1 1 E	FR DESTINATION SIGN
1 1 K	FR DESTINATION SIGN

No.	DESCRIPTION
1 2	12V BAT ELECTRONIC JCT BLOCK
1 2	BAT CPT 12V BATTERY
1 2 A	FR JCT BOX 12V DISC SW
1 2 A	RR JCT BOX 12V DISC SW
1 2 B	12V BAT ELECTRICAL JCT BLOCK
1 2 B	RR JCT BOX 12V DISC SW
1 2 B	FR JCT BOX 12V DISC SW
1 2 B E	BAT. EQUALIZER MONITOR
1 2 C	FR JCT BOX 12V DISC SW
1 2 C	RR JCT BOX 12V HOT WIRE
1 2 C E	RR JCT BOX 12V HOT WIRE
1 2 D	BAT CPT 12V BATTERY
1 2 D A	12V IGNITION DISTRIBUTION
1 2 D T	TTLT MODULE
1 2 D Z	ZF TRANSM. HOTWIRE
1 2 E	FR JCT BOX 12V DISC SW
1 2 E	RR JCT BOX 12V DISC SW
1 2 F	BAT CPT 12V FJB & IC
1 2 F	FR JCT BOX 12V DISC SW
1 2 G	FR JCT BOX 12V DISC SW
1 2 H	12 V IGNITION D.T.RUN LIGHT
1 2 J	FR JCT BOX 12V DISC SW
1 2 I	12V IGNITION DISTRIBUTION
1 2 I	RR JCT BOX 12V IGNITION
1 2 K	12 VOLT IGN. TTLT & HVAC MODULE
1 2 I A	12V IGNITION DISTRIBUTION
1 2 I A	FR JCT BOX 12V IGNITION
1 2 I B	FR JCT BOX 12V IGNITION
1 2 I E	ABS-FR JCT BOX 12V IGNITION
1 2 I F	FR JCT BOX 12V IGNITION
1 2 I Z	12 V IGNITION FOR ZF TRANSM.
1 2 L X	CLUSTER (12V HOT WIRE)
1 2 M	ABS-FR JCT BOX 12V DISC. SW.
1 2 P	LH CONSOLE POWER OUTLET
1 2 R	BAT CPT 12V DISC RLY TO RJB
1 2 R	MEMORY BATTERY RADIO
1 2 S	SOUND SYSTEM 12V RADIO
1 2 S 1	SOUND SYSTEM 12V RADIO
1 2 S 1 A	DVD KARAOKE FEEDING
1 2 S 2	SOUND SYSTEM 12V RADIO
1 2 S 2 A	DVD KARAOKE FEEDING
1 2 S B	SOUND SYSTEM 12V FEEDING
1 2 S S	SOUND SYSTEM 12V FEEDING
1 2 V	RR JCT BOX 12V DISC SW
1 2 V A	BATTERY TO EQUALIZER 12V
1 2 V D	12V HOT WIRE DISTRIBUTION
1 2 V F	BAT CPT 12V FJB & IC
1 2 V I	12V IGNITION DISTRIBUTION
1 2 V R	BAT CPT 12V DISC RLY TO RJB
1 2 W	12V BATTERY DDEC III

No.	DESCRIPTION
1 2 W	ENTRANCE DOOR (SEDAN)
1 2 W A	ENTRANCE DOOR (SEDAN)
1 2 W B	ENTRANCE DOOR (SEDAN)
1 2 X	FR JCT BOX 12V DISC SW
1 2 X 2	FR JCT BOX 12V DISC SW
1 2 Y	FR JCT BOX 12V DISC SW
1 3 A	ALARM & SIGNAL-LO AIR PRIM.
1 3 B	ALARM & SIGNAL-LO AIR SEC.
1 4	LAVATORY-FLUSHING PUMP
1 4 A	LAVATORY-FLUSHING PUMP
1 4 P	LAVATORY-FLUSHING PUMP
1 5	EXTERIOR LTS-MULTI FUNC LEVEL
1 5 A	WIPER & WASHER UPPER WINDSHIELD
1 6	SPEED - SIGNAL +
1 6 A	SPEED - SIGNAL +
1 6 T	SPEED - SIGNAL +
1 7	EXTERIOR LTS-FLASHER UNIT
1 7 A	EXTERIOR LTS-FLASHER UNIT
1 9	DIFFERENTIAL OIL TEMP
2 0	SPEED - SIGNAL -
2 0 T	SPEED - SIGNAL -
2 0 W	SPEED - SIGNAL -
2 1	EXTERIOR LTS-DIRECTIONAL LH
2 1 A	EXTERIOR LTS-DIRECTIONAL LH
2 1 B	EXTERIOR LTS-HAZARD
2 1 C	EXTERIOR LTS-CORNERING LH
2 1 H	EXTERIOR LTS-DIRECTIONAL LH
2 1 K	EXTERIOR LTS-CORNERING
2 1 N	EXTERIOR LTS-CORNERING LH
2 1 P	EXTERIOR LTS-CORNERING LH
2 3	EXTERIOR LTS-DIRECTIONAL RH
2 3	EXTERIOR LTS-DIRECTIONAL RH
2 3 A	EXTERIOR LTS-DIRECTIONAL RH
2 3 B	EXTERIOR LTS-DIRECTIONAL RH
2 3 C	EXTERIOR LTS-CORNERING RH
2 3 N	EXTERIOR LTS-CORNERING RH
2 3 P	EXTERIOR LTS-CORNERING RH
2 4	BAT CPT 24V BATTERY
2 4	FR JCT BOX 24V DISC SW
2 4 A	BOOSTER BLOCK 24V DISC SW
2 4 A	FR JCT BOX 24V DISC SW
2 4 A	RR JCT BOX 24V DISC SW
2 4 B	24V STARTER RLY FEEDING
2 4 B	FR JCT BOX 24V DISC SW
2 4 B A	RR JCT BOX 24V DISC SW
2 4 B C	24 VOLT BATT. CHARGER
2 4 B E	RJB CPT-BAT EQ MONITOR HOT WIRE
2 4 C	FR JCT BOX 24V DISC SW
2 4 C	RR JCT BOX 24V DISC SW
2 4 D	BAT CPT 24V HOT WIRE

No.	DESCRIPTION
2 4 D	FR JCT BOX 24V HOT WIRE
2 4 D	RR JCT BOX 24V HOT WIRE
2 4 D A	A/C JCT BOX 24V HOT WIRE
2 4 D Z	24 V HOT WIRE FOR ZF TRANSM.
2 4 E	BAT CPT 24V DISC SW
2 4 E	FR JCT BOX 24V DISC SW
2 4 E	RR JCT BOX 24V DISC SW
2 4 F	FR JCT BOX 24V DISC SW
2 4 F	RR JCT BOX 24V DISC SW
2 4 G	FR JCT BOX 24V DISC SW
2 4 G	RR JCT BOX 24V DISC SW
2 4 H	FR JCT BOX 24V DISC SW
2 4 H	RR JCT BOX 24V DISC SW
2 4 I	FR JCT BOX 24V IGNITION
2 4 I	RR JCT BOX 24V IGNITION
2 4 I A	FR JCT BOX 24V IGNITION
2 4 I B	FR JCT BOX 24V IGNITION
2 4 I B	RR JCT BOX 24V IGNITION
2 4 I C	FR JCT BOX 24V IGNITION
2 4 I C	RR JCT BOX 24V IGNITION
2 4 I F	FJB 24VOLT IGNITION
2 4 I Z	ZF TANSM. IGNITION
2 4 P	FR JCT BOX 24V DISC SW
2 4 S	24V DISC SW RLY SIGNAL
2 4 S 1	SOUND SYSTEM 24V AMPLIFIER
2 4 S 2	SOUND SYSTEM 24V AMPLIFIER
2 4 S 3	SOUND SYSTEM 24V VIDEO
2 4 S 4	SOUND SYSTEM 24V VIDEO
2 4 S B	SOUND SYSTEM 24V FEEDING
2 4 S S	SOUND SYSTEM 24V FEEDING
2 4 R	24 VOLTS FRONT CAMERA SW.
2 4 V 2	RR JCT BOX 24V DISC SW
2 4 V 3	RR JCT BOX 24V DISC SW
2 4 V 4	RR JCT BOX 24V DISC SW
2 4 V 5	RR JCT BOX 24V DISC SW
2 4 V D	24V HOT WIRE RR JCT BOX
2 4 V F	BAT CPT 24V SW TO FJB & IC
2 4 V A	BATTERY TO EQUALIZER 24V
2 4 V I	RR JCT BOX 24V IGNITION
2 4 V R	BAT CPT 24V DISC SW TO RJB
2 4 W	RR JCT BOX 24V DISC SW (WCL)
2 4 W C	BATT.CPT TO HYD. PUMP (WCL)
2 4 W L	24V BATTERY-HYD. PUMP (WCL)
2 4 Z Z	24 VOLT - ZF TRANSM. POWER
2 5	24 VOLT ALT.SIGNAL MODULE
2 5 A 1	PRE-EXITATION ALT. BOSCH #1
2 5 A 2	PRE-EXITATION ALT. BOSCH #2
2 5 A	T.T. LT. ALTERNATOR #1
2 5 B	12 VOLTS IGN. ALT. SIGNAL MODULE
2 5 D	12 V. ENGINE RUN / HVAC SYSTEM

CIRCUIT NUMBER CODE

No.	DESCRIPTION
2 5 E	USE ON VIP ONLY
2 5 F	12 VOLT IGN. DISTRIBUTION
2 5 H	24 VOLT IGN. ALT. BOSCH
2 5 K	T.T. LT. ALTERNATOR #2
2 6 A	CIGAR LIGHTER
2 6	DRIVER'S WINDOW LIFTER
2 6 B	DRIVER'S WINDOW LIFTER
2 6 C	DRIVER'S WINDOW LIFTER
2 7	LAVATORY-EMERGENCY SONALERT
2 8 A	A/C & HEAT SYSTEM-HI PRESSURE
2 8 H	TTLT HI LO PRESS
2 8 T	TTLT HI LO PRESS
2 9	A/C & HEAT SYSTEM-DRIVER'S HTR
2 9 A	A/C & HEAT SYSTEM-DRIVER'S HTR
2 9 B	A/C & HEAT SYSTEM-DRIVER'S HTR
2 9 H	HVAC DASH MODULE
2 9 X	A/C & HEAT SYSTEM-DRIVER'S HTR
3 0 A	GALLEY
3 1 A	A/C & HEAT SYSTEM-UNLOADER
3 1 B	A/C & HEAT SYSTEM-UNLOADER
3 1 B	WIPER & WASHER SYSTEM
3 1 C	WIPER & WASHER SYSTEM
3 1 D	WIPER & WASHER SYSTEM
3 1 E	WIPER & WASHER SYSTEM
3 1 J	WIPER & WASHER SYSTEM
3 1 X	WIPER & WASHER SYSTEM
3 2	EXTERIOR LTS-BACK-UP
3 2 B	EXTERIOR LTS-BACK-UP
3 2 C	BACK-UP PWR & SIGNAL
3 2 D	BACK-UP ALARM
3 5	ENTRANCE DOOR (SEDAN)
3 5 B	ENTRANCE DOOR (SEDAN)
3 5 BB	ENTRANCE DOOR (SEDAN)
3 5 D	ENTRANCE DOOR (SEDAN)
3 6	JACOB BRAKE SYSREM
3 6 A	JACOB BRAKE SYSREM
3 8	INTERIOR LTS-24V FLUORESCENT
3 8 A	INTERIOR LTS-24V FLUORESCENT
3 8 C	INTERIOR LTS-24V FLUORESCENT
3 8 D	INTERIOR LTS-24V FLUORESCENT
3 9	INTERIOR LTS-24V LH CONSOLE SW
3 9 A	INTERIOR LTS-DRIVER"S LTS
3 9 P	READING LIGHTS
4 1	A/C & HEAT SYSTEM-COND FAN MOT
4 1 A	A/C & HEAT SYSTEM-COND FAN MOT
4 1 B	A/C & HEAT SYSTEM-COND FAN MOT
4 2	A/C & HEAT SYSTEM-COND FAN MOT
4 2 A	A/C & HEAT SYSTEM-COND FAN MOT
4 3	HAT RACK FAN
4 3 A	HAT RACK FAN
4 3 B	HAT RACK FAN
4 3 D	HAT RACK FAN
4 3 E	HAT RACK FAN
4 3 F	HAT RACK FAN
4 3 G	HAT RACK FAN
4 4	EXTERIOR LTS-FOG
4 4 A	EXTERIOR LTS-FOG
4 4 B	EXTERIOR LTS-FOG
4 4 C	EXTERIOR LTS-FOG & HAZARD
4 5 A	A/C & HEAT SYSTEM-FULL AIR
4 5 B	A/C & HEAT SYSTEM-WATER PUMP
4 5 C	A/C & HEAT SYSTEM-WATER VALVE
4 5 D	A/C & HEAT SYSTEM-WATER VALVE
4 5 E	A/C & HEAT SYSTEM-HEAT 1 SIGN
4 5 G	A/C & HEAT SYSTEM-DRIVER'S HTR
4 5 H	A/C & HEAT SYSTEM-DRIVER'S HTR
4 5 W	A/C & HEAT SYSTEM-COND. DOOR AJAR
4 6	EXTERIOR LTS-MARKER
4 6 A	EXTERIOR LTS-MARKER
4 6 B	EXTERIOR LTS-MARKER
4 6 B	EXTERIOR LTS-MARKER
4 6 C	EXTERIOR LTS-MARKER
4 7	A/C & HEAT SYSTEM-DRIVER'S HTR
4 8	ENTRANCE DOOR (SEDAN)
4 8 A	ENTRANCE DOOR (SEDAN)
4 9	ENTRANCE DOOR (SEDAN)
4 9 A	ENTRANCE DOOR (SEDAN)
5 2	ALARM & SIGNAL-ELEC. HORN
5 2 A	ALARM & SIGNAL-ELEC. HORN
5 2 B	ALARM & SIGNAL- AIR HORN
5 2 C	ALARM & SIGNAL- AIR HORN
5 3	ALARM & SIGNAL-ELEC. HORN
5 3 A	WIPER & WASHER SYSTEM
5 3 B	WIPER & WASHER SYSTEM
5 3 C	WIPER & WASHER SYSTEM
5 3 E	WIPER & WASHER SYSTEM
5 3 J	WIPER & WASHER SYSTEM
5 5	EXTERIOR LTS-HI BEAM
5 7	EXTERIOR LTS-HI BEAM
5 7 A	A/C & HEAT SYSTEM-WATER PUMP
5 7 A	EXTERIOR LTS-HI BEAM
5 7 B	A/C & HEAT SYSTEM-WATER PUMP
5 7 C	PRE-HEAT WATER HEATER
5 8	EXTERIOR LTS-LO BEAM
5 8 A	EXTERIOR LTS-LO BEAM
5 8 B	EXTERIOR LTS-LO BEAM
5 8 E	EXTERIOR LTS-LO BEAM
5 9 A	JACOB BRAKE SYSTEM
6 1	EXTERIOR LTS-24V FEED SW
6 1 A	EXTERIOR LTS-HEAD SIGNAL
6 2	LAVATORY-OCCUPIED LT
6 2 A	LAVATORY-FLUOR LT
6 2 B	LAVATORY-FLUOR LT
6 2 E	LAVATORY-OCCUP & FLUOR LT
6 3	EXTERIOR LTS-CLEARANCE
6 3 A	EXTERIOR LTS-CLEARANCE
6 3 B	EXTERIOR LTS-CLEARANCE
6 3 C	EXTERIOR LTS-MARKER SIGNAL
6 3 D	EXTERIOR LTS-MARKER & TAIL
6 3 E	EXTERIOR LTS-CLEARANCE
6 3 F	EXTERIOR LTS-MARKER BLINKER
6 3 H	EXTERIOR LTS-TAIL
6 4	DRIVERS FAN
6 5	FOOT DAMPER MOTOR
6 5 A	FOOT DAMPER MOTOR
6 5 D	DRIVER REC. DAMPER
6 6	O_PASS. ON/OFF
6 7	24 VOLT RUN DISTRIBUTION
6 7 A	A/C & HEAT SYSTEM
6 7 C	HEATING WINDSHIELD
6 7 K	A/C & HEAT SYSTEM-COND FAN CTR
6 7 L	A/C & HEAT SYSTEM-COND FAN CTR
6 7 X	A/C & HEAT SYSTEM
6 8	DASH & DEFROST DAMPER MOTOR
6 8 A	DASH & DEFROST DAMPER MOTOR
7 0	INTERIOR LTS-HAT RACK & RR RUN.
7 2	SUN VISOR-FEEDING
7 2 A	SUN VISOR-RH
7 2 B	SUN VISOR-RH
7 2 C	SUN VISOR-LH
7 2 D	SUN VISOR-LH
7 3	LAVATORY-FEEDING
7 4	INTERIOR LTS-READING RH
7 4 A	INTERIOR LTS-READING RH
7 4 B	INTERIOR LTS-READING RH
7 4 D	INTERIOR LTS-READING SIGNAL
7 5	INTERIOR LTS-READING LH
7 5 A	INTERIOR LTS-READING LH
7 6	FUEL TANK GAUGE
7 6 B	LOW FUEL LT & ETHER COLD START
7 6 C	LOW FUEL LT
7 6 P	FUEL PRIME PUMP
7 6 M	FUEL PRIME PUMP
7 7 B	A/C & HEAT SYSTEM-COMPRESSOR
7 7 C	A/C & HEAT SYSTEM-COMPRESSOR
7 7 H	A/C & HEAT SYSTEM-COMPRESSOR
8 1	EXTERIOR LTS-STOP SW
8 2	EXTERIOR LTS-STOP SIGNAL
8 2 A	EXTERIOR LTS-STOP SIGNAL
8 2 B	EXTERIOR LTS-STOP LTS
8 2 K	EXTERIOR LTS-STOP PARK BRK
8 2 L	EXTERIOR LTS-LH STOP
8 2 R	EXTERIOR LTS-LH STOP
8 3	ENGINE CTR-KEY SW ACCES SIGN
8 4	ENGINE CTR-KEY SW ACCES SIGN
8 5	ENGINE CTR-KEY SWIGNITION SIGN
8 5	24V IGNITION SIGNAL
8 5 A	24V IGN DASH INSTRUMENTATION
8 5 B	ENGINE CTR-24V IGNITION
8 5 C	PARKING BRAKE SWITCH
8 5 E	STOP LIGHT RLY
8 5 F	ENGINE CTR-ENGINE CTR SW IGN
8 5 F	LO AIR SONALERT
8 5 G	RADIATOR FAN CLUTCH
8 5 X	12V IGN ABS
8 5 Y	ABS SYSTEM
8 6	ENGINE CTR-STARTER SOL SIGN
8 6 A	ENGINE CTR-STARTER SOL SIGN
8 6 F	ENGINE CTR-STARTER TTLT SIGN
8 6 T	ENGINE CTR-STARTER TTLT SIGN
8 8	ENGINE CTR-RR START SIGNAL
8 9	ENGINE CTR-RR START SIGNAL
9 0 B	A/C & HEAT SYSTEM-COND FAN MOT
9 0 B	ENGINE CTR-MAST KEY SW FEED
9 0 C	A/C & HEAT SYSTEM-COND FAN MOT
9 0 F	CHARG SYST-VOLTAGE REGUL. "B"
9 0 H	A/C & HEAT SYSTEM-EVAP FAN MOT
9 1	PARKING BRAKE SW SIGNAL
9 1 A	DDEC-FAST IDLE SIGNAL
9 1 S	SONALERT PARKING BRAKE
9 1 W	PARK, BRAKE SW SIGN (WCL)
9 2	BATTERY EQUALIZER-CHECK BALANCE
9 3	BATTERY EQUALIZER-CHECK LO/HI
9 5 A	ENGINE BRAKE & RETARDER SYSTEM
9 5 B	ENGINE BRAKE & RETARDER SYSTEM
9 5 C	ENGINE BRAKE & RETARDER SYSTEM
9 5 D	ENGINE BRAKE & RETARDER SYSTEM
9 7	TACHOMETER (-)
1 0 0	INTERIOR LTS-GENERAL
1 0 0 A	INTERIOR LTS-GENERAL
1 0 0 B	INTERIOR LTS-GENERAL
1 0 1	24V STARTER SOL FEEDING
1 0 1	WORLD TRANSM-LO SIGN SOL. LO
1 0 2	WORLD TRANSM-SOL. SUPPLY
1 0 2 A	24V STARTER TO BOSCH ALTERNATOR
1 0 3	LOW BUOY
1 0 4	WORLD TRANSM-SOL. FORWARD
1 0 5	WORLD TRANSM-RETARDER & SUMP
1 0 5 W	WORLD TRANSM-RETARDER & SUMP

CIRCUIT NUMBER CODE

No.	DESCRIPTION
106	WORLD TRANSM-OIL LEVEL HI
107	WORLD TRANSM-LOCKUP SOL. HI
108	WORLD TRANSM-REM. PWR WAKE UP
109	WORLD TRANSM-RET. SOL. LO
110	ALARM & SIGNAL-WATER TEMP
110	WORLD TRANSM-LOCKUP SOL. LO
111	WORLD TRANSM-SOL. C6
112	WORLD TRANSM-SPARE OUTPUT (+)
113	ALARM & SIGNAL-OIL PRESS
113	WORLD TRANSM-REVERSE WARNING
113W	WORLD TR.-REVERSE WARNING
113Z	ZF TRANSM.- REVERSE SIGNAL
114	INTERIOR LTS-DASH LT REGUL.
114	WORLD TRANSM-SPARE OUTPUT (-)
114A	INTERIOR LTS-DASH LT
114B	INTERIOR LTS-DASH LT REGUL.
114D	INTERIOR LTS-DASH LT REGUL.
114E	INTERIOR LTS-DASH LT REGUL.
115	ALARM & SIGNAL-TAG PRESS
115	DDEC III-COOLANT LEVEL
115	WORLD TRANSM-DO NOT SHIFT SIGN
115C	DDEC III-COOLANT LEVEL
115W	WORLD TRANSM-DO NOT SHIFT SIGN
115W	ZF TRANSM. - CHECK TRANSM. TTLT
116	WORLD TRANSM-LO SIGNAL SOL. HI
116B	A/C & HEAT SYSTEM-DRIVER'S HTR
117	WORLD TRANSM-SPARE INPUT (-)
117A	ALARM & SIGNAL-TRANSM OIL TEMP
117A	ALARM & SIGNAL-TRANSM OIL TEMP
118	WORLD TRANSM-SPARE INPUT (+)
119	WORLD TRANSM-ENG BRK INPUT (+)
120	WORLD TRANSM-SOL. C1
121	WORLD TRANSM-SOL. GRD 2
122	A/C & HEAT SYSTEM-DRIVER'S HTR
122	A/C & HEAT SYSTEM-FRESH AIR
122	WORLD TRANSM-SOL. GRD 4
122A	A/C & HEAT SYSTEM-FRESH AIR
123	WORLD TRANSM-NEUTRAL START
123A	ALARM & SIGNAL-FIRE DETECTOR
123B	ALARM & SIGNAL-FIRE DETECTOR
124	WORLD TRANSM-THROTTLE (HI)
125	WORLD TRANSM-RET. INDICATOR
125	GALLEY LAMP
125T	GALLEY LAMP
125W	WORLD TRANSM-RET. INDICATOR
126	KNEELING SYSTEM
126A	KNEELING SYSTEM
126B	KNEELING SYSTEM
126C	KNEELING SYSTEM
126D	KNEELING SYSTEM

No.	DESCRIPTION
126E	KNEELING SYSTEM
126F	KNEELING SYSTEM
126F1	KNEELING SYSTEM
126G	KNEELING SYSTEM
126H	KNEELING SYSTEM
126K	KNEELING SYSTEM
126P	KNEELING SYSTEM
126R	KNEELING SYSTEM
126W	5 MPH N.C. SIGNAL (WCL)
126S	KNEELING SYSTEM
126T	KNEELING SYSTEM
127	WORLD TRANSM-LUBE PRESS SW.
127	WORLD TRANSM-RETARDER FEED SOL.
127	POWER- PRE-HEAT WATER HEATER
127A	PRE-HEAT WATER HEATER
128A	PRE-HEAT WATER HEATER
128B	PRE-HEAT - BURNER ON SIGNAL
128	WORLD TRANSM-SOL. C2
129	POWER- PRE-HEAT WATER HEATER
129B	POWER- PRE-HEAT WATER HEATER
129	WORLD TRANSM-SOL. C5
130	A/C & HEAT SYSTEM-EVAP FAN MOTOR
130	WORLD TRANSM-SOL. GRD 3
131	WORLD TRANSM-SOL. C4
132	WORLD TRANSM-ENG BRK OUTPUT (-)
132W	WORLD TRANSM-ENG BRK OUTPUT (-)
133	GALLEY-HEAT CONTAINERS
133A	GALLEY-HEAT CONTAINERS
133B	GALLEY-HEAT CONTAINERS
133C	GALLEY-HEAT CONTAINERS
133	WORLD TRANSM-RET. ACTUATOR HI
134	GALLEY-HEAT CONTAINERS
134A	GALLEY-HEAT CONTAINERS
134	WORLD TRANSM-RET. APPLY SOL. HI
135	A/C & HEAT SYSTEM-AIR SENSOR
135A	A/C & HEAT SYSTEM-AIR SENSOR
135	WORLD TRANSM-ANALOG GRD
135D	WORLD TRANSM-RETARDER RES MOD
135C	WORLD TRANSM-RETARDER TEMP
136	GALLEY-ACCESSORIES
136	WORLD TRANSM-ECU POWER
136V	WORLD TRANSM-12V BATTERY
136W	WORLD TRANSM-12V BATTERY
136X	WORLD TRANSM-12V BATTERY
137	WORLD TRANSM-RETARDER
137A	MIRROR (SPARTAN & RAMCO)
137B	RR VIEW MIRROR (SPARTAN)
137C	RR VIEW MIRROR (SPARTAN)
137D	RR VIEW MIRROR (SPARTAN)
137E	RR VIEW MIRROR (SPARTAN)

No.	DESCRIPTION
137G	RR VIEW MIRROR (SPARTAN)
138	ABS SYSTEM
138	WORLD TRANSM-RETARDER TEMP
138A	ABS SYSTEM
139	ABS SYSTEM
139	WORLD TRANSM-OUTPUT SPEED HI
140	ABS SYSTEM
140	WORLD TRANSM-OUTPUT SPEED LO
141	ABS SYSTEM
141	WORLD TRANSM-ENGINE SPEED HI
142	ABS SYSTEM
142	WORLD TRANSM-SERIAL COM. A
143	ABS SYSTEM
143	WORLD TRANSM-ECU BATTERY GRD
143A	ABS SYSTEM
143W	WORLD TRANSM-BATTERY GRD
144	ABS SYSTEM
144	WORLD TRANSM-ECU CHASSIS GRD
144A	ABS SYSTEM
145	ABS SYSTEM
146	ABS SYSTEM
146A	TRANSMISSION-12V IGNITION
146	WORLD TRANSM-IGNITION SENSE
146W	WORLD TRANSM-12V IGNITION
146X	WORLD TRANSM-12V IGNITION
147	ABS SYSTEM
147	WORLD TRANSM-OIL TEMP
147A	ETHER COLD START & D.R.L.
147C	ETHER COLD START
148	ABS SYSTEM
148	WORLD TRANSM-OUTPUT SPEED LO
149	ABS SYSTEM
149	WORLD TRANSM-TURBINE SPEED HI
149A	ABS SYSTEM
150	DDEC III-ECM BATTERY GRD
150	WORLD TRANSM-ENGINE SPEED LO
150A	DDEC III-ECM BATTERY GRD
151	ABS SYSTEM
151	DDEC III-ECM BATTERY GRD
151	WORLD TRANSM-SERIAL COM. B
152	ABS SYSTEM
153	WORLD TRANSM-SPARE INPUT (-)
154	ABS SYSTEM
154	WORLD TRANSM-ABS RET. INPUT
155	WORLD TRANSM-SPARE INPUT (-)
156	WORLD TRANSM-THROTTLE POS.
156A	ABS SYSTEM
157	WORLD TRANSM-SPEEDO SIGNAL
157B	ABS SYSTEM
157D	A.T.C. SYSTEM

No.	DESCRIPTION
157E	A.T.C. SYSTEM
157F	A.T.C. SYSTEM
158	WORLD TRANSM-DIMMER
160	ALARM & SIGNAL-TAG PRESS SW
160	WORLD TRANSM-SER. INTERFACE (-)
161	WORLD TRANSM-SIGNAL GRD
161B	WORLD TRANSM-SIGNAL GRD
162	WORLD TRANSM-PRESS. SW C3
163	WORLD TRANSM-RETARDER ENABLE
164	WORLD TRANSM-RET. ACTUATOR SIGN
165	A/C & HEAT SYSTEM-TRANSMITER
165	WORLD TRANSM-OIL LEVEL SIGNAL
166B	A/C & HEAT SYSTEM-EVAP. MOD.
167	W. TR.-OUT SPEED INTERLOCK
167Z	ZF- OUT SPEED INTERLOCK
168	A/C & HEAT SYSTEM-HUMIDISTAT
168	WORLD TRANSM-SER. INTERFACE (+)
168A	A/C & HEAT SYSTEM-HUMIDISTAT
170	LUGGAGE DOOR LOCK
170C	LUGGAGE DOOR LOCK
170E	LUGGAGE DOOR LOCK
170H	LUGGAGE DOOR LOCK
181A	THERMOMETER INSIDE SENSOR
181B	THERMOMETER INSIDE SENSOR
181C	THERMOMETER OUTSIDE SENSOR
181D	THERMOMETER OUTSIDE SENSOR
197	FUEL WATER FILTER
197A	FUEL WATER FILTER
197B	FUEL WATER FILTER
198	FILTER FUEL HEATER
199	AIR FILTER RESTRICTION SENDER
201	WORLD TRANSM-SPARE
202	WORLD TRANSM-SPARE
203	WORLD TRANSM-SPARE
204	WORLD TRANSM-SPARE
205	WORLD TRANSM-SPARE
206	WORLD TRANSM-SPARE
214	WORLD TRANSM-BACK UP SIGNAL
225	LAVATORY FAN
225A	LAVATORY FAN
231	NEUTRAL SIGNAL GRD
231A	NEUTRAL COIL RELAY FEED SIGNAL
231W	NEUTRAL SIGNAL GRD (WCL)
231Z	ZF NEUTRAL SIGNAL GRD
240	DDEC III-ECM 12V FEEDING
241	DDEC III-ECM 12V FEEDING
251A	DDEC III - DATA LOGGER 12 H.W.
251	DDEC III - PRODRIVER 12V H.W.
253	GALLEY-MICROWAVE
254	GALLEY-12V FRIGO NORCOLD

CIRCUIT NUMBER CODE

No.	DESCRIPTION	No.	DESCRIPTION	No.	DESCRIPTION	No.	DESCRIPTION
254 A	GALLEY-FRIGO	326	EATON TRANSMISSION				
255	GALLEY-COFEEMAKER	327	EATON TRANSMISSION				
255 A	GALLEY-COFEEMAKER	328	EATON TRANSMISSION				
257	WINDSHIELD HEATED	329	EATON TRANSMISSION				
257 A	WINDSHIELD HEATED	330	EATON TRANSMISSION - EPL				
257 B	WINDSHIELD HEATED	331	EATON TRANSMISSION - EPL				
257 C	WINDSHIELD HEATED	332	EATON TRANSMISSION				
257 D	WINDSHIELD HEATED SPARE	333	EATON TRANSMISSION - 12V BATTERY				
257 E	WINDSHIELD HEATED SPARE	334	EATON GENERATION 2				
258	WINDSHIELD HEATED	416	DDEV IV- SENSOR SUPPLY 5VDC				
258 A	WINDSHIELD HEATED	417	DDEC III-LIMIT SPEED GOVERNOR	900	DDEC III-DATA LINK (+)		
259	WINDSHIELD HEATED	419	DDEC III-CHECK ENGINE LIGHT	901	DDEC III-DATA LINK (-)		
259 A	WINDSHIELD HEATED	439	DDEC III-12V IGNITION	905	DDEC IV- AMBIANT AIR TEMPERATURE		
260	WINDOW AJAR	440	DDEC III-12V IGNITION	908	DDEC III-HYDRAULIC PWM#1 OUTPUT		
290	FAN CLUTCH RADIATOR	440 A	DDEC III-12V IGNITION	916	DDEC III-SENSOR SUPPLY (5VDC)		
290	FAN CLUTCH RADIATOR	451	DDEC III-A/C FAN CLUTCH	925	J1939-HIGH		
291	FAN CLUTCH RADIATOR SPD 1	452	DDEC IV- SENSOR RETURN (ENGINE)	926	J1939-LOW		
292	FAN CLUTCH RADIATOR SPD 2	505	DDEC III-TACHOMETER DRIVE	927	J1939-SHIELD		
300	DOOR AJAR MAGN.SW. (WCL)	509	DDEC III-STOP ENGINE LIGHT	952	DDEC III-SENSOR RETURN #1		
300 A	POWER SYSTEM SW. (WCL)	510	DDEC III-FAST IDLE SIGNAL	953	DDEC III-SENSOR RETURN #2		
300 B	DOOR AJAR ALARM (WCL)	524	DDEC III-ENGINE BRAKE DISABLE	953 A	THROTTLE INHIBIT		
301	POWER SYSTEM SW. (WCL)	524 B	ZF SIGNAL – AUX. SENSOR THROTTLE	976	DDEC IV- RELATIVE HUMIDITY		
302	DOOR AJAR T.T.LT. (WCL)	525	DDEC III-FAST IDLE SIGNAL	979	DDEC III-ENGINE BRAKE 2 CYL.		
302 A	DOOR AJAR ALARM SIGN.(WCL)	528	DDEC III-STOP ENG. OVERRIDE	988	DDEC III-CRUISE ENABLE LTS.		
302 B	DOOR AJAR MAGN.SW. (WCL)	531	DDEC III-CRUISE CLUTCH RELEASE				
303	REMOTE WALL SW. DWN (WCL)	541	DDEC III-CRUISE SET SW				
304	REMOTE WALL SW. UP (WCL)	543	DDEC III-CRUISE STOP SW CUT IN				
305	PARK. BRAKE SOL. VALVE (WCL)	544	DDEC III-CRUISE ON/OFF SW				
305 A	PARK. BRAKE SAFETY SW. (WCL)	545	DDEC III-CRUISE RESUME SW				
305 A1	DOOR AJAR - PARK. BRAKE (WCL)	555	DDEC III-FAN CLUTCH SPEED# 1				
306	CONTROL SYSTEM (WCL RICON)	556	DDEC III-VEHICLE SPEED (+)				
307	CONTROL SYSTEM (WCL RICON)	557	DDEC III-VEHICLE SPEED (-)				
308	CONTROL SYSTEM (WCL RICON)	563	DDEC III-FAN CLUTCH SPEED# 2				
309	CONTROL SYSTEM (WCL RICON)	564	DDEC III-DIGITAL OUTPUT				
310	EATON TRANSMISSION	564 B	DDEC III-DIGITAL OUTPUT				
311	EATON TRANSMISSION	565	DDEC III-ENGINE BRAKE ACTIVE				
312	EATON TRANSMISSION	565 Z	DECELERATION LTS				
313	EATON TRANSMISSION	583	DDEC III-ENGINE BRAKE 4 CYL.				
314	EATON TRANSMISSION	700	J1587(+)				
315	EATON TRANSMISSIOM	701	J1587(-) – GROUND				
316	EATON TRANSMISSION - EPL	705	ZF SIGNALS				
317	EATON TRANSMISSION	706	ZF SIGNALS				
318	EATON TRANSMISSION	707	ZF SIGNALS				
319	EATON TRANSMISSION	717	ZF SIGNALS				
320	EATON TRANSMISSION	718	ZF SIGNALS				
321	EATON TRANSMISSION	719	ZF SIGNALS				
322	EATON TRANSMISSIION	720	ZF SIGNALS				
323	EATON TRANSMISSION	740	EASY START VALVE				
324	EATON TRANSMISSION	761	ZF SIGNALS				
325	EATON TRANSMISSION						

CIRCUIT BREAKERS CODE

No.	PAGE	AMP.	#PREV.	LOCATION	FUNCTION
CB 1	2	40A	562686	RR. JCT. BOX	12V IGNITION
CB 2	1.1	40A	870093	RR. JCT. BOX	12V HOT WIRE
CB 3	1.1	70A	562687	RR. JCT. BOX	12V FEED RR. JCT. BOX
CB 4	1.1	70A	562687	RR. JCT. BOX	12V FEED FR. JCT. BOX
CB 5	1.1	30A	870690	RR. JCT. BOX	24V HOT WIRE
CB 6	1.1	90A	562683	RR. JCT. BOX	24V FEED RR. JCT. BOX
CB 7	1.1	90A	562683	RR. JCT. BOX	24V FEED FR. JCT. BOX
CB 8	1.1	150A	560299	RR. JCT. BOX	24V EVAPORATOR FAN MOTOR
CB 10	4	8A	561791	FR. JCT. BOX	MASTER KEY SWITCH
CB 13	23.1	90A	562683	RR. JCT. BOX	INVERTER
CB 16	4	8A	561791	RR. JCT. BOX	ENGINE-RR. CTRL & START SW.
CB 18	4	6A	561790	RR. JCT. BOX	ENGINE-FR. CTRL SW.
CB 19	5	15A	561793	RR. JCT. BOX	E.C.M. DDEC 12V POWER
CB 20	5	15A	561793	RR. JCT. BOX	E.C.M. DDEC 12V POWER
CB 21	5	10A	561792	RR. JCT. BOX	E.C.M. DDEC and WTEC 12V IGNITION
CB 24	6	25A	561795	RR. JCT. BOX	WORLD TRANSMISSION
CB 26	9.3	8A	561791	RR. JCT. BOX	BACK-UP LTS
CB 27	7	8A	561791	FR. JCT. BOX	24V IGNITION DASH ACCESSORIES
CB 28	7	6A	561790	FR. JCT. BOX	12V IGNITION DASH ACCESSORIES
CB 34	9.3	6A	561792	RR. JCT. BOX	BACK-UP ALARM
CB 35	9.3	15A	561793	FR. JCT. BOX	FOG & HAZARD DASH SW.
CB 37	9.1	6A	561790	FR. JCT. BOX	HEAD & MULTI-FUNCTION LEVEL SW.
CB 38	9.1	3A	561797	FR. JCT. BOX	FR. MARKER LTS
CB 39	9.1	6A	561790	FR. JCT. BOX	CLEARANCE & IDENTIFICATION LTS
CB 40	9.1	3A	561797	FR. JCT. BOX	FR. CLEARANCE & IDENTIFICATION LTS
CB 41	9.1	3A	561797	RR. JCT. BOX	RR. CLEARANCE & IDENTIFICATION LTS
CB 42	9.1	8A	561791	RR. JCT. BOX	RR. TAIL & LICENCE LTS
CB 43	9.1	20A	561794	FR. JCT. BOX	HEADLAMP (HI)
CB 44	9.1	15A	561793	FR. JCT. BOX	HEADLAMP (LO)
CB 45	9.2	10A	561792	FR. JCT. BOX	WIPER CTRL MULTI-FUNCTION LEVEL SW.
CB 46	9.2	10A	561792	FR. JCT. BOX	FLASHER & HAZARD UNIT
CB 48	9.3	6A	561790	FR. JCT. BOX	STOP LTS PRESSURE SW.
CB 49	9.3	6A	561790	RR. JCT. BOX	STOP & CYCLOP LTS
CB 51	10	10A	561792	FR. JCT. BOX	UPPER WIPER CTRL SW.
CB 52	11.1	15A	561793	RR. JCT. BOX	LUGGAGE & DOOR AJAR LTS
CB 57	11.2	8A	561791	FR. JCT. BOX	DASH LTS RHEOSTAT
CB 58	13.1	6A	561790	FR. JCT. BOX	HVAC DASH MODULE
CB 63	11.4	8A	561791	FR. SERVICE.CPT	110V FLUORESCENT LH
CB 64	11.4	8A	561791	FR. SERVICE.CPT	110V FLUORESCENT RH
CB 70					
CB 71					
CB 72	13.2	10A	561792	RR. JCT. BOX	A/C COMPRESSOR CLUTCH
CB 73	13.2	15A	561793	RR. JCT. BOX	WATER PUMP
CB 77	13.1	40A	870093	RR. JCT. BOX	CONDENSER FAN MOTOR RH
CB 78	13.1	40A	870093	RR. JCT. BOX	CONDENSER FAN MOTOR LH
CB 79	13.2	15A	561793	FR. JCT. BOX	DRIVER'S HTR FAN SPEED CTRL MODULE
CB 85	16.1	10A	561790	FR. JCT. BOX	ENTRANCE DOOR (SEDAN) & STEP LTS
CB 93	1.2	30A	870690	RR. JCT. BOX	SOUND SYSTEM 12V FEEDING
CB 94	1.2	30A	870690	RR. JCT. BOX	SOUND SYSTEM 24V FEEDING
CB 95	20.1	10A	561792	S.S. JCT. PANEL	SOUND SYSTEM AMPLI
CB 96	20.1	10A	561792	S.S. JCT. PANEL	VIDEO SYSTEM
CB 97					
CB 98	20.1	15A	561793	S.S. JCT. PANEL	SOUND SYSTEM RADIO & CD
CB 99	20.7	15A	561793	S.S. JCT. PANEL	SEAT AUDIO SYSTEM
CB 105	21.1	6A	561790	FR. JCT. BOX	E.C.U. ABS
CB 106	21.1	15A	561793	FR. JCT. BOX	E.C.U. ABS
CB 124	8	6A	561790	RR. JCT. BOX	RADIATOR FAN CLUTCH
CB 126	25.1	150A	560299	RR. JCT. BOX	WHELL CHAIR LIFT MOTOR PUMP STE.

No.	PAGE	AMP.	#PREV.	LOCATION	FUNCTION
CB 126	25.2	90A	560298	RR. JCT. BOX	WHELL CHAIR LIFT MOTOR PUMP RICON
CB 127	13.3	15A	561793	RR. JCT. BOX	HAT-RACK FAN L.H.
CB 128	13.3	15A	561793	RR. JCT. BOX	HAT-RACK FAN R.H.
CB 129	7.2	6A	561790	FR. JCT. BOX	CLUSTER
CB 130	28	6A	561790	FR. JCT. BOX	CLUSTER
CB 131					

CIRCUIT BREAKERS CODE

No.	PAGE	AMP.	#PREV.	LOCATION	FUNCTION
CB 1	2	40A	562686	RR. JCT. BOX	12V IGNITION
CB 2	1.1	40A	870093	RR. JCT. BOX	12V HOT WIRE
CB 3	1.1	70A	562687	RR. JCT. BOX	12V FEED RR. JCT. BOX
CB 4	1.1	70A	562687	RR. JCT. BOX	12V FEED FR. JCT. BOX
CB 5	1.1	30A	870690	RR. JCT. BOX	24V HOT WIRE
CB 6	1.1	90A	562683	RR. JCT. BOX	24V FEED RR. JCT. BOX
CB 7	1.1	90A	562683	RR. JCT. BOX	24V FEED FR. JCT. BOX
CB 8	1.1	150A	560299	RR. JCT. BOX	24V EVAPORATOR FAN MOTOR
CB 10	4	8A	561791	FR. JCT. BOX	MASTER KEY SWITCH
CB 13	23.1	90A	562683	RR. JCT. BOX	INVERTER
CB 16	4	8A	561791	RR. JCT. BOX	ENGINE-RR. CTRL & START SW.
CB 18	4	6A	561790	RR. JCT. BOX	ENGINE-FR. CTRL SW.
CB 19	5	15A	561793	RR. JCT. BOX	E.C.M. DDEC 12V POWER
CB 20	5	15A	561793	RR. JCT. BOX	E.C.M. DDEC 12V POWER
CB 21	5	10A	561792	RR. JCT. BOX	E.C.M. DDEC and WTEC 12V IGNITION
CB 24	6	25A	561795	RR. JCT. BOX	WORLD TRANSMISSION
CB 26	9.3	8A	561791	RR. JCT. BOX	BACK-UP LTS
CB 27	7	8A	561791	FR. JCT. BOX	24V IGNITION DASH ACCESSORIES
CB 28	7	6A	561790	FR. JCT. BOX	12V IGNITION DASH ACCESSORIES
CB 34	9.3	6A	561792	RR. JCT. BOX	BACK-UP ALARM
CB 35	9.3	15A	561793	FR. JCT. BOX	FOG & HAZARD DASH SW.
CB 37	9.1	6A	561790	FR. JCT. BOX	HEAD & MULTI-FUNCTION LEVEL SW.
CB 38	9.1	3A	561797	FR. JCT. BOX	FR. MARKER LTS
CB 39	9.1	6A	561790	FR. JCT. BOX	CLEARANCE & IDENTIFICATION LTS
CB 40	9.1	3A	561797	FR. JCT. BOX	FR. CLEARANCE & IDENTIFICATION LTS
CB 41	9.1	3A	561797	RR. JCT. BOX	RR. CLEARANCE & IDENTIFICATION LTS
CB 42	9.1	8A	561791	RR. JCT. BOX	RR. TAIL & LICENCE LTS
CB 43	9.1	20A	561794	FR. JCT. BOX	HEADLAMP (HI)
CB 44	9.1	15A	561793	FR. JCT. BOX	HEADLAMP (LO)
CB 45	9.2	10A	561792	FR. JCT. BOX	WIPER CTRL MULTI-FUNCTION LEVEL SW.
CB 46	9.2	10A	561792	FR. JCT. BOX	FLASHER & HAZARD UNIT
CB 48	9.3	6A	561790	FR. JCT. BOX	STOP LTS PRESSURE SW.
CB 49	9.3	6A	561790	RR. JCT. BOX	STOP & CYCLOP LTS
CB 51	10	10A	561792	FR. JCT. BOX	UPPER WIPER CTRL SW.
CB 52	11.1	15A	561793	RR. JCT. BOX	LUGGAGE & DOOR AJAR LTS
CB 57	11.2	8A	561791	FR. JCT. BOX	DASH LTS RHEOSTAT
CB 58	13.1	6A	561790	FR. JCT. BOX	HVAC DASH MODULE
CB 63	11.4	8A	561791	FR. SERVICE.CPT	110V FLUORESCENT LH
CB 64	11.4	8A	561791	FR. SERVICE.CPT	110V FLUORESCENT RH
CB 70					
CB 71					
CB 72	13.2	10A	561792	RR. JCT. BOX	A/C COMPRESSOR CLUTCH
CB 73	13.2	15A	561793	RR. JCT. BOX	WATER PUMP
CB 77	13.1	40A	870093	RR. JCT. BOX	CONDENSER FAN MOTOR RH
CB 78	13.1	40A	870093	RR. JCT. BOX	CONDENSER FAN MOTOR LH
CB 79	13.2	15A	561793	FR. JCT. BOX	DRIVER'S HTR FAN SPEED CTRL MODULE
CB 85	16.1	10A	561790	FR. JCT. BOX	ENTRANCE DOOR (SEDAN) & STEP LTS
CB 93	1.2	30A	870690	RR. JCT. BOX	SOUND SYSTEM 12V FEEDING
CB 94	1.2	30A	870690	RR. JCT. BOX	SOUND SYSTEM 24V FEEDING
CB 95	20.1	10A	561792	S.S. JCT. PANEL	SOUND SYSTEM AMPLI
CB 96	20.1	10A	561792	S.S. JCT. PANEL	VIDEO SYSTEM
CB 97					
CB 98	20.1	15A	561793	S.S. JCT. PANEL	SOUND SYSTEM RADIO & CD
CB 99	20.7	15A	561793	S.S. JCT. PANEL	SEAT AUDIO SYSTEM
CB 105	21.1	6A	561790	FR. JCT. BOX	E.C.U. ABS
CB 106	21.1	15A	561793	FR. JCT. BOX	E.C.U. ABS
CB 124	8	6A	561790	RR. JCT. BOX	RADIATOR FAN CLUTCH
CB 126	25.1	150A	560299	RR. JCT. BOX	WHEEL CHAIR LIFT MOTOR PUMP STE.

No.	PAGE	AMP.	#PREV.	LOCATION	FUNCTION
CB 126	25.2	50A	563355	RR. JCT. BOX	WHEEL CHAIR LIFT MOTOR PUMP RICON
CB 127	13.3	15A	561793	RR. JCT. BOX	HAT-RACK FAN L.H.
CB 128	13.3	15A	561793	RR. JCT. BOX	HAT-RACK FAN R.H.
CB 129	7.2	6A	561790	FR. JCT. BOX	CLUSTER
CB 130	28	6A	561790	FR. JCT. BOX	CLUSTER
CB 131					

CIRCUIT BREAKERS CODE

No.	PAGE	AMP.	#PREV.	LOCATION	FUNCTION
CB 1	2	40A	562686	RR. JCT. BOX	12V IGNITION
CB 2	1.1	40A	870093	RR. JCT. BOX	12V HOT WIRE
CB 3	1.1	70A	562687	RR. JCT. BOX	12V FEED RR. JCT. BOX
CB 4	1.1	70A	562687	RR. JCT. BOX	12V FEED FR. JCT. BOX
CB 5	1.1	30A	870690	RR. JCT. BOX	24V HOT WIRE
CB 6	1.1	90A	562683	RR. JCT. BOX	24V FEED RR. JCT. BOX
CB 7	1.1	90A	562683	RR. JCT. BOX	24V FEED FR. JCT. BOX
CB 8	1.1	150A	560299	RR. JCT. BOX	24V EVAPORATOR FAN MOTOR
CB 10	4	8A	561791	FR. JCT. BOX	MASTER KEY SWITCH
CB 13					
CB 16	4	8A	561791	RR. JCT. BOX	ENGINE-RR. CTRL & START SW.
CB 18	4	6A	561790	RR. JCT. BOX	ENGINE-FR. CTRL SW.
CB 19	5	15A	561793	RR. JCT. BOX	E.C.M. DDEC 12V POWER
CB 20	5	15A	561793	RR. JCT. BOX	E.C.M. DDEC 12V POWER
CB 21	5	10A	561792	RR. JCT. BOX	E.C.M. DDEC and WTEC 12V IGNITION
CB 24	6	25A	561795	RR. JCT. BOX	WORLD TRANSMISSION
CB 26	9.3	8A	561791	RR. JCT. BOX	BACK-UP LTS
CB 27	7	8A	561791	FR. JCT. BOX	24V IGNITION DASH ACCESSORIES
CB 28	7	6A	561790	FR. JCT. BOX	12V IGNITION DASH ACCESSORIES
CB 34	9.3	6A	561792	RR. JCT. BOX	BACK-UP ALARM
CB 35	9.3	15A	561793	FR. JCT. BOX	FOG & HAZARD DASH SW.
CB 37	9.1	6A	561790	FR. JCT. BOX	HEAD & MULTI-FUNCTION LEVEL SW.
CB 38	9.1	3A	561797	FR. JCT. BOX	FR. MARKER LTS
CB 39	9.1	6A	561790	FR. JCT. BOX	CLEARANCE & IDENTIFICATION LTS
CB 40	9.1	3A	561797	FR. JCT. BOX	FR. CLEARANCE & IDENTIFICATION LTS
CB 41	9.1	3A	561797	RR. JCT. BOX	RR. CLEARANCE & IDENTIFICATION LTS
CB 42	9.1	8A	561791	RR. JCT. BOX	RR. TAIL & LICENCE LTS
CB 43	9.1	20A	561794	FR. JCT. BOX	HEADLAMP (HI)
CB 44	9.1	15A	561793	FR. JCT. BOX	HEADLAMP (LO)
CB 45	9.2	10A	561792	FR. JCT. BOX	WIPER CTRL MULTI-FUNCTION LEVEL SW.
CB 46	9.2	10A	561792	FR. JCT. BOX	FLASHER & HAZARD UNIT
CB 48	9.3	6A	561790	FR. JCT. BOX	STOP LTS PRESSURE SW.
CB 49	9.3	6A	561790	RR. JCT. BOX	STOP & CYCLOP LTS
CB 51	10	10A	561792	FR. JCT. BOX	UPPER WIPER CTRL SW.
CB 52	11.1	15A	561793	RR. JCT. BOX	LUGGAGE & DOOR AJAR LTS
CB 57	11.2	8A	561791	FR. JCT. BOX	DASH LTS RHEOSTAT
CB 58	13.1	6A	561790	FR. JCT. BOX	HVAC DASH MODULE
CB 63					
CB 64					
CB 70					
CB 71					
CB 72	13.2	10A	561792	RR. JCT. BOX	A/C COMPRESSOR CLUTCH
CB 73	13.2	15A	561793	RR. JCT. BOX	WATER PUMP
CB 77	13.1	40A	870093	RR. JCT. BOX	CONDENSER FAN MOTOR RH
CB 78	13.1	40A	870093	RR. JCT. BOX	CONDENSER FAN MOTOR LH
CB 79	13.2	15A	561793	FR. JCT. BOX	DRIVER'S HTR FAN SPEED CTRL MODULE
CB 85	16.1	10A	561792	FR. JCT. BOX	ENTRANCE DOOR (SEDAN) & STEP LTS
CB 93	1.2	30A	870690	RR. JCT. BOX	SOUND SYSTEM 12V FEEDING
CB 94	1.2	30A	870690	RR. JCT. BOX	SOUND SYSTEM 24V FEEDING
CB 95	20.1	10A	561792	S.S. JCT. PANEL	SOUND SYSTEM AMPLI
CB 96	20.1	10A	561792	S.S. JCT. PANEL	VIDEO SYSTEM
CB 97					
CB 98	20.1	15A	561793	S.S. JCT. PANEL	SOUND SYSTEM RADIO & CD
CB 99	20.7	15A	561793	S.S. JCT. PANEL	SEAT AUDIO SYSTEM
CB 105	21.1	6A	561790	FR. JCT. BOX	E.C.U. ABS
CB 106	21.1	15A	561793	FR. JCT. BOX	E.C.U. ABS
CB 124	8	6A	561790	RR. JCT. BOX	RADIATOR FAN CLUTCH
CB 126	25.1	150A	560299	RR. JCT. BOX	WHEEL CHAIR LIFT MOTOR PUMP STE.

No.	PAGE	AMP.	#PREV.	LOCATION	FUNCTION
CB 126	25.2	50A	563355	RR. JCT. BOX	WHEEL CHAIR LIFT MOTOR PUMP RICON
CB 127	13.3	15A	561793	RR. JCT. BOX	HAT-RACK FAN L.H.
CB 128	13.3	15A	561793	RR. JCT. BOX	HAT-RACK FAN R.H.
CB 129	7.2	6A	561790	FR. JCT. BOX	CLUSTER
CB 130	28	6A	561790	FR. JCT. BOX	CLUSTER
CB 131					

CIRCUIT BREAKERS CODE

No.	PAGE	AMP.	#PREV.	LOCATION	FUNCTION
CB 1	2	40A	562686	RR. JCT. BOX	12V IGNITION
CB 2	1.1	40A	870093	RR. JCT. BOX	12V HOT WIRE
CB 3	1.1	70A	562687	RR. JCT. BOX	12V FEED RR. JCT. BOX
CB 4	1.1	70A	562687	RR. JCT. BOX	12V FEED FR. JCT. BOX
CB 5	1.1	30A	870690	RR. JCT. BOX	24V HOT WIRE
CB 6	1.1	90A	562683	RR. JCT. BOX	24V FEED RR. JCT. BOX
CB 7	1.1	90A	562683	RR. JCT. BOX	24V FEED FR. JCT. BOX
CB 8	1.1	150A	560299	RR. JCT. BOX	24V EVAPORATOR FAN MOTOR
CB 10	4	8A	561791	FR. JCT. BOX	MASTER KEY SWITCH
CB 13					
CB 16	4	8A	561791	RR. JCT. BOX	ENGINE-RR. CTRL & START SW.
CB 18	4	6A	561790	RR. JCT. BOX	ENGINE-FR. CTRL SW.
CB 19	5	15A	561793	RR. JCT. BOX	E.C.M. DDEC 12V POWER
CB 20	5	15A	561793	RR. JCT. BOX	E.C.M. DDEC 12V POWER
CB 21	5	10A	561792	RR. JCT. BOX	E.C.M. DDEC and WTEC 12V IGNITION
CB 24	6	25A	561795	RR. JCT. BOX	WORLD TRANSMISSION
CB 26	9.3	8A	561791	RR. JCT. BOX	BACK-UP LTS
CB 27	7	8A	561791	FR. JCT. BOX	24V IGNITION DASH ACCESSORIES
CB 28	7	6A	561790	FR. JCT. BOX	12V IGNITION DASH ACCESSORIES
CB 34	9.3	6A	561792	RR. JCT. BOX	BACK-UP ALARM
CB 35	9.3	15A	561793	FR. JCT. BOX	FOG & HAZARD DASH SW.
CB 37	9.1	6A	561790	FR. JCT. BOX	HEAD & MULTI-FUNCTION LEVEL SW.
CB 38	9.1	3A	561797	FR. JCT. BOX	FR. MARKER LTS
CB 39	9.1	6A	561790	FR. JCT. BOX	CLEARANCE & IDENTIFICATION LTS
CB 40	9.1	3A	561797	FR. JCT. BOX	FR. CLEARANCE & IDENTIFICATION LTS
CB 41	9.1	3A	561797	RR. JCT. BOX	RR. CLEARANCE & IDENTIFICATION LTS
CB 42	9.1	8A	561791	RR. JCT. BOX	RR. TAIL & LICENCE LTS
CB 43	9.1	15A	561793	FR. JCT. BOX	HEADLAMP (HI)
CB 44	9.1	15A	561793	FR. JCT. BOX	HEADLAMP (LO)
CB 45	9.2	10A	561792	FR. JCT. BOX	WIPER CTRL MULTI-FUNCTION LEVEL SW.
CB 46	9.2	10A	561792	FR. JCT. BOX	FLASHER & HAZARD UNIT
CB 48	9.3	6A	561790	FR. JCT. BOX	STOP LTS PRESSURE SW.
CB 49	9.3	6A	561790	RR. JCT. BOX	STOP & CYCLOP LTS
CB 51	10	10A	561792	FR. JCT. BOX	UPPER WIPER CTRL SW.
CB 52	11.1	15A	561793	RR. JCT. BOX	LUGGAGE & DOOR AJAR LTS
CB 57	11.2	8A	561791	FR. JCT. BOX	DASH LTS RHEOSTAT
CB 58	13.1	6A	561790	FR. JCT. BOX	HVAC DASH MODULE
CB 63					
CB 64					
CB 70					
CB 71					
CB 72	13.2	10A	561792	RR. JCT. BOX	A/C COMPRESSOR CLUTCH
CB 73	13.2	15A	561793	RR. JCT. BOX	WATER PUMP
CB 77	13.1	40A	870093	RR. JCT. BOX	CONDENSER FAN MOTOR RH
CB 78	13.1	40A	870093	RR. JCT. BOX	CONDENSER FAN MOTOR LH
CB 79	13.2	15A	561793	FR. JCT. BOX	DRIVER'S HTR FAN SPEED CTRL MODULE
CB 85	16.1	10A	561792	FR. JCT. BOX	ENTRANCE DOOR (SEDAN) & STEP LTS
CB 93	1.2	30A	870690	RR. JCT. BOX	SOUND SYSTEM 12V FEEDING
CB 94	1.2	30A	870690	RR. JCT. BOX	SOUND SYSTEM 24V FEEDING
CB 95	20.1	10A	561792	S.S. JCT. PANEL	SOUND SYSTEM AMPLI
CB 96	20.1	10A	561792	S.S. JCT. PANEL	VIDEO SYSTEM
CB 97					
CB 98	20.1	15A	561793	S.S. JCT. PANEL	SOUND SYSTEM RADIO & CD
CB 99	20.7	15A	561793	S.S. JCT. PANEL	SEAT AUDIO SYSTEM
CB 105	21.1	6A	561790	FR. JCT. BOX	E.C.U. ABS
CB 106	21.1	15A	561793	FR. JCT. BOX	E.C.U. ABS
CB 124	8	6A	561790	RR. JCT. BOX	RADIATOR FAN CLUTCH
CB 126	25.1	150A	560299	RR. JCT. BOX	WHEEL CHAIR LIFT MOTOR PUMP STE.

No.	PAGE	AMP.	#PREV.	LOCATION	FUNCTION
CB 126	25.2	50A	563355	RR. JCT. BOX	WHEEL CHAIR LIFT MOTOR PUMP RICON
CB 127	13.3	15A	561793	RR. JCT. BOX	HAT-RACK FAN L.H.
CB 128	13.3	15A	561793	RR. JCT. BOX	HAT-RACK FAN R.H.
CB 129	7.2	6A	561790	FR. JCT. BOX	CLUSTER
CB 130	28	6A	561790	FR. JCT. BOX	CLUSTER
CB 131					

CIRCUIT BREAKERS CODE

No.	PAGE	AMP.	#PREV.	LOCATION	FUNCTION
CB 1	2	40A	562686	RR. JCT. BOX	12V IGNITION
CB 2	1.1	40A	870093	RR. JCT. BOX	12V HOT WIRE
CB 3	1.1	70A	562687	RR. JCT. BOX	12V FEED RR. JCT. BOX
CB 4	1.1	70A	562687	RR. JCT. BOX	12V FEED FR. JCT. BOX
CB 5	1.1	30A	870690	RR. JCT. BOX	24V HOT WIRE
CB 6	1.1	90A	562683	RR. JCT. BOX	24V FEED RR. JCT. BOX
CB 7	1.1	90A	562683	RR. JCT. BOX	24V FEED FR. JCT. BOX
CB 8	1.1	150A	560299	RR. JCT. BOX	24V EVAPORATOR FAN MOTOR
CB 10	4	8A	561791	FR. JCT. BOX	MASTER KEY SWITCH
CB 13					
CB 16	4	8A	561791	RR. JCT. BOX	ENGINE-RR. CTRL & START SW.
CB 18	4	6A	561790	RR. JCT. BOX	ENGINE-FR. CTRL SW.
CB 19	5	15A	561793	RR. JCT. BOX	E.C.M. DDEC 12V POWER
CB 20	5	15A	561793	RR. JCT. BOX	E.C.M. DDEC 12V POWER
CB 21	5	10A	561792	RR. JCT. BOX	E.C.M. DDEC and WTEC 12V IGNITION
CB 24	6	25A	561795	RR. JCT. BOX	WORLD TRANSMISSION
CB 26	9.3	8A	561791	RR. JCT. BOX	BACK-UP LTS
CB 27	7	8A	561791	FR. JCT. BOX	24V IGNITION DASH ACCESSORIES
CB 28	7	6A	561790	FR. JCT. BOX	12V IGNITION DASH ACCESSORIES
CB 34	9.3	6A	561792	RR. JCT. BOX	BACK-UP ALARM
CB 35	9.3	15A	561793	FR. JCT. BOX	FOG & HAZARD DASH SW.
CB 37	9.1	6A	561790	FR. JCT. BOX	HEAD & MULTI-FUNCTION LEVEL SW.
CB 38	9.1	3A	561797	FR. JCT. BOX	FR. MARKER LTS
CB 39	9.1	6A	561790	FR. JCT. BOX	CLEARANCE & IDENTIFICATION LTS
CB 40	9.1	3A	561797	FR. JCT. BOX	FR. CLEARANCE & IDENTIFICATION LTS
CB 41	9.1	3A	561797	RR. JCT. BOX	RR. CLEARANCE & IDENTIFICATION LTS
CB 42	9.1	8A	561791	RR. JCT. BOX	RR. TAIL & LICENCE LTS
CB 43	9.1	15A	561793	FR. JCT. BOX	HEADLAMP (HI)
CB 44	9.1	15A	561793	FR. JCT. BOX	HEADLAMP (LO)
CB 45	9.2	10A	561792	FR. JCT. BOX	WIPER CTRL MULTI-FUNCTION LEVEL SW.
CB 46	9.2	10A	561792	FR. JCT. BOX	FLASHER & HAZARD UNIT
CB 48	9.3	6A	561790	FR. JCT. BOX	STOP LTS PRESSURE SW.
CB 49	9.3	6A	561790	RR. JCT. BOX	STOP & CYCLOP LTS
CB 51	10	10A	561792	FR. JCT. BOX	UPPER WIPER CTRL SW.
CB 52	11.1	15A	561793	RR. JCT. BOX	LUGGAGE & DOOR AJAR LTS
CB 57	11.2	8A	561791	FR. JCT. BOX	DASH LTS RHEOSTAT
CB 58	13.1	6A	561790	FR. JCT. BOX	HVAC DASH MODULE
CB 63					
CB 64					
CB 70					
CB 71					
CB 72	13.2	10A	561792	RR. JCT. BOX	A/C COMPRESSOR CLUTCH
CB 73	13.2	15A	561793	RR. JCT. BOX	WATER PUMP
CB 77	13.1	40A	870093	RR. JCT. BOX	CONDENSER FAN MOTOR RH
CB 78	13.1	40A	870093	RR. JCT. BOX	CONDENSER FAN MOTOR LH
CB 79	13.2	25A	561795	FR. JCT. BOX	DRIVER'S HTR FAN SPEED CTRL MODULE
CB 85	16.1	10A	561792	FR. JCT. BOX	ENTRANCE DOOR (SEDAN) & STEP LTS
CB 93	1.2	30A	870690	RR. JCT. BOX	SOUND SYSTEM 12V FEEDING
CB 94	1.2	30A	870690	RR. JCT. BOX	SOUND SYSTEM 24V FEEDING
CB 95	20.1	10A	561792	S.S. JCT. PANEL	SOUND SYSTEM AMPLI
CB 96	20.1	10A	561792	S.S. JCT. PANEL	VIDEO SYSTEM
CB 97					
CB 98	20.1	15A	561793	S.S. JCT. PANEL	SOUND SYSTEM RADIO & CD
CB 99	20.7	15A	561793	S.S. JCT. PANEL	SEAT AUDIO SYSTEM
CB 105	21.1	6A	561790	FR. JCT. BOX	E.C.U. ABS
CB 106	21.1	15A	561793	FR. JCT. BOX	E.C.U. ABS
CB 124	8	6A	561790	RR. JCT. BOX	RADIATOR FAN CLUTCH
CB 126	25.1	150A	560299	RR. JCT. BOX	WHEEL CHAIR LIFT MOTOR PUMP STE.

No.	PAGE	AMP.	#PREV.	LOCATION	FUNCTION
CB 126	25.2	50A	563355	RR. JCT. BOX	WHEEL CHAIR LIFT MOTOR PUMP RICON
CB 127	13.3	15A	561793	RR. JCT. BOX	HAT-RACK FAN L.H.
CB 128	13.3	15A	561793	RR. JCT. BOX	HAT-RACK FAN R.H.
CB 129	7.2	6A	561790	FR. JCT. BOX	CLUSTER
CB 130	28	6A	561790	FR. JCT. BOX	CLUSTER
CB 131					

CONNECTORS CODE

NO	LOCATION	TYPE	CAVITY	#PIN HOUSING	#SOCKET HOUSING
AA1	BEHIND DASH - SONALERT	BOSCH	5		561183
AA2	BEHIND DASH - SONALERT	BOSCH	5		561183
C X1	FR SERVICE COMPT- ECU ABS	AMP	15		563200
C X2	FR SERVICE COMPT- ECU ABS	AMP	18		563201
C RH	DDEC ENGINE- RELATIVE HUMIDITY SENS.	FCI	4		563277
C RXTX	HVAC DASN MODULE COMMUNICATION	MOLEX	3	563206	562873
C S	RR JCT BOX ECU WORLD TR.	PED	32		562817
C T	RR JCT BOX ECU WORLD TR.	PED	32		562824
C V	RR JCT BOX ECU WORLD TR.	PED	32		562823
		AMP CPC	9	561636	561637
C WX1	ENGINE CPT-WEBASTO PRE-HEAT WATER	AMP SEALED	7		563135
C WX3	ENGINE CPT-WEBASTO PRE-HEAT WATER	AMP SEALED	7	563136	
C Y	CLUSTER	JAE	30	---	562765
C 1	FR JCT BOX COMPARTMENT	AMP CPC	14	561585	561584
C 2	FR JCT BOX COMPARTMENT	AMP CPC	16	561639	561640
C 3	FR JCT BOX COMPARTMENT	AMP CPC	24	561641	561643
C 4	FR JCT BOX COMPARTMENT	AMP CPC	37	561644	561646
C 5	FR SERVICE COMPT.-UNDERNEATH	AMP CPC	37	561644	561646
C 6	FR SERVICE COMPT.-UNDERNEATH	AMP CPC	16	561639	561640
C 7					
C 8	FR SERVICE COMPT.-UNDERNEATH	AMP CPC	24	561641	561643
C 9	FR SERVICE COMPT.-UNDERNEATH	AMP CPC	24	561641	561643
C 10	LUGGAGE COMPT. WATER BOOSTER PUMP	PED	2	562348	562471
C 11	FR SERVICE COMPARTMENT	AMP CPC	37	561644	561646
C 12	FR SERVICE COMPARTMENT	AMP CPC	16	561639	561640
C 13	LH CONSOLE-CTR MIRROR	AMP MNL	6	561552	561515
C 14	UNDER DASH-LH MIRROR	AMP MNL	9	561661	561662
C 15	A/C CLUTCH	PED WP	2	561566	561690
C 16	LH CONSOLE SW-CRUISE ON OFF	EATON	10	------	562763
C 17	LH CONSOLE SW-CRUISE RESUME	EATON	10	------	562763
C 18	LH CONSOLE SW-CRUISE SET	EATON	10	------	562763
C 19	LH CONSOLE DECEL SW	EATON	10	------	562763
C 20	RR JCT BOX	DEUTSCH	70	562282	562285
C 21	RR JCT BOX	DEUTSCH	24	562280	562283
C 22	RR JCT BOX - EATON TRANSM.	AMP MNL	6	561552	561515
C 23	DDEC ENGINE-ECM J1939	PED MP	6	-------	561962
C 24					
C 25	RR JCT BOX - EATON TRANSM. J1939	DEUTCH	3	562877	562884
C 26	HYD & MAN TRANSM.-NEUT.& B/U	PED WP	4	561610	561611
C 27	HYD & MAN TRANSM.-SPEED SENS.	PED WP	2	561566	561690
C 28	EATON TRANSMISSION	DEUTCH	3	562877	562884
C 29	EATON TRANSMISSION	PED MP	6	562878	------
C 30	RR JCT BOX - ECU EATON TRANSM.	PED MP	32	------	562866
C 31	RR JCT BOX - ECU EATON TRANSM.	PED MP	24	------	562865
C 32	DDEC ENGINE-ECM	PED	30	------	561600
C 33	RR JCT BOX - EATON TRANSM.	DEUTCH	9	562531	------
C 34	RH. CONSOLE - EATON TRANSM. SHIFTER	PED MP	3	------	562871
C 35	RR JCT BOX	AMP CPC	24	561642	561643
C 36	RH. CONSOLE - EATON TRANSM. SHIFTER	PED MP	24	------	562874
C 37	RR SECTION-LH HAT RACK	MOLEX	6	562558	562557
C 38	RR SECTION-RH HAT RACK	MOLEX	6	562558	562557
C 39	LH CONSOLE - EATON TRANSM. DISPLAY	AMP MNL	4	561551	561668
C 40	RR JCT BOX - EATON TRANSM. J1939	DEUTCH	3	562877	562884
C 41	LAVATORY ROOF LIGHT	LEECRAFT	2	-----	562803
C 42	LAVATORY BACK WALL-WTR TANK	AMP MNL	2	560900	560898
C 43	LAVATORY BACK WALL-ACCES.	AMP MNL	9	561661	561662
C 44	EATON TRANSM. J1939	DEUTCH	3	562877	562884
C 45	FR JCT BOX COMPARTMENT	AMP CPC	24	561642	561643
C 46	EATON TRANSM. J1939	DEUTCH	3	562877	562884
C 47	FR SERVICE COMPARTMENT	AMP CPC	16	561694	561695
C 48	FR. SERVICE CMPT.PRESS SW PARKBREAK	DEUTCH	4	562479	562477
C 49	BATTERIE COMPT.-LT	AMP MNL	2	561248	561247
C 50	FR SERVICE COMPT.-LOW BUOY	PED WP	1	561605	561577
C 51					
C 52	RR JCT BOX	AMP CPC	24	561642	561643
C 53	SPARE TIRE COMPT ENTRANCE STEP LIGHT	DEUTCH	2	562486	562485
C 54	SPARE TIRE COMPT ENTRANCE STEP LIGHT	DEUTCH	2	562486	562485

NO	LOCATION	TYPE	CAVITY	#PIN HOUSING	#SOCKET HOUSING
C 55	RH SWITCH PANEL	AMP CPC	9	561636	561637
C 56	HAT RACK- MOTOR FAN	MOLEX	6	562558	562557
C 57	HAT RACK- MOTOR FAN	MOLEX	6	562558	562557
C 58	RR JCT BOX AC PANEL	DEUTSCH	24	562280	562283
C 59	RR JCT BOX AC PANEL	AMP CPC	14	561584	561583
C 60	RR JCT BOX COMPT.-LT	AMP MNL	2	561248	561247
C 61	LUGGAGE COMPARTMENT LTS	AMP MNL	2	561248	561247
C 62	LUGGAGE COMPARTMENT LTS	AMP MNL	2	561248	561247
C 63	LUGGAGE COMPARTMENT LTS	AMP MNL	2	561248	561247
C 64	LUGGAGE COMPARTMENT LTS	AMP MNL	2	561248	561247
C 65	LUGGAGE COMPARTMENT LTS	AMP MNL	2	561248	561247
C 66	LUGGAGE COMPARTMENT LTS	AMP MNL	2	561248	561247
C 67	LUGGAGE COMPARTMENT LTS	AMP MNL	2	561248	561247
C 68	LUGGAGE COMPARTMENT LTS	AMP MNL	2	561248	561247
C 69	RR AXLE ACC-INSIDE PVC END	PED WP	6	561568	561578
C 70	LH CONSOLE	AMP CPC	16	561642	561643
C 71	FR JCT BOX COMPARTMENT	AMP CPC	37	561645	561646
C 72	FR JCT BOX COMPARTMENT	AMP CPC	24	561642	561643
C 73	DASH CENTER PANEL	AMP CPC	16	561639	561640
C 74	FR JCT BOX COMPARTMENT	AMP CPC	37	561645	561646
C 75	SERV CPT. RXT. ENT. DOOR SW	DEUTSCH	4	562479	562477
C 76	LUGGAGE COMPT.-AIR RET.SENS.	AMP MNL	2	561248	561247
C 77	LUGGAGE COMPT.-AIR RET.SENS.	AMP MNL	2	561248	561247
C 78					
C 79					
C 80	LUGGAGE COMPT.-AIR RET.SENS.	AMP MNL	2	561248	561247
C 81	PASSENGER COMPT.-AISLE LTS	AMP MNL	2	560900	560898
C 82	ENTRANCE DOOR	MOLEX	6	562070	562069
C 83	ENTRANCE DOOR-PROIMITY SW	MOLEX	4	561477	561476
C 84	ENTRANCE DOOR-PRESSURE SW	PED WP	2	561566	561690
C 85	UNDER INSTRUMENT PANEL LH	AMP MTA-100	------	562248	------
C 86					
C 87	RR END ROOF	AMP CPC	9	561636	561637
C 88					
C 89	RR END ROOF-B/U NONITOR	AMP CPC	4	561582	561581
C 90	RR JCT BOX	AMP CPC	15	561987	561986
C 91	RR JCT BOX	AMP CPC	37	561714	561713
C 92	FR LH UPPER WHELL CPT-ABS	AMP CPC	9	561635	561637
C 93	FR LH UPPER WHELL CPT-ABS		35	------	641094
C 94	RH CONSOLE ENTRANCE STEP LIGHT	DEUTCH	2	562486	562485
C 95	CONDENSOR CPT - LIQ. SOL. VALVE	PED WP	2	561566	561690
C 96	FR AXLE ACCESSORIES	AMP CPC	14	561585	561585
C 97	RR AXLE ACC-INSIDE PVC END	PED WP	6	561568	561578
C 98	FR SERVICE COMPT-EL.FT.PEDAL	PED WP	3	561782	561781
C 99	FR SERVICE COMPT LTS	AMP MNL	2	561248	561247
C 100	LH CONSOLE – 120 VOLTS SWITCH	EATON	8	------	562763
C 101	FR SERVICE COMPT-ELEC. HORNS	PED WP	2	561566	561690
C 102	FR SERV & SIDE CPT-FLASH. LH	GROTE	2	------	562155
C 103	FR SERV & SIDE CPT-MARKERS	GROTE	2	------	562155
C 104	LAVATORY TRAP-FLUSH PUMP SW.	DEUTSCH	4	562479	562477
C 104	FR SERV & SIDE CPT-FLASH. RH	GROTE	2	------	562155
C 105	FR SERVICE COMPT-LIQ.S.VALVE	PED WP	2	561566	561690
C 106	FR SERVICE COMPT-WATER VALVE	PED WP	2	561566	561690
C 107					
C 108	FR SERVICE COMPT-KNEEL.SYS	PED WP	2	561566	561690
C 109	FR SERVICE COMPT-KNEEL.SYS	PED WP	2	561566	561690
C 110	FR SERVICE COMPT-KNEEL.SYS	PED WP	2	561566	561690
C 111	EVAPORATOR COMPT-DAMPER	DEUTSCH	2	562486	562485
C 112	LAVATORY BACK WALL-FLUSH PUMP SW.	DEUTSCH	4	562479	562477
C 113	RR MARKER LT	GROTE	2	------	562155
C 114	RR J. BOX CPT DOOR DIR LT LH	GROTE	2	------	562155
C 115					
C 116	ENGINE COMPT. LTS	GROTE	2		563268
C 117	RR JCT BOX MARKER LT	GROTE	2	------	562155
C 117	FR SRV. COMPT. KNEELING UP SOL VALVE	PED WP	2	561761	
C 118	ENGINE COMPT-LAVATORY FAN	PED WP	2	561566	561690
C 119	ENGINE CPT RR DOOR RH LO LAMP	PED WP	6	561606	561607

CONNECTORS CODE

NO	LOCATION	TYPE	CAVITY	#PIN HOUSING	#SOCKET HOUSING
C 120	ENGINE CPT RR DOOR LH LO LAMP	PED WP	6	561606	561607
C 121	BATTERIE CPT. DOOR DIR LT RH	GROTE	2	------	562155
C 122					
C 123	TAG AXLE-UNLOAD TAG RH VALVE	PED WP	2	561566	561690
C 124	ENGINE CPT-ETHER SW	PED WP	2	561566	561690
C 125	ENGINE CPT-B/U ALARM	PED WP	2	561566	561690
C 126	ENGINE CPT-FLUSHING PUMP	PED WP	2	561566	561690
C 127	ENGINE CPT-FUEL FILTER	PED WP	2	561566	561690
C 128	ENGINE CPT-A/C COMPR.CLUTCH	ITT SS	2	561813	561812
C 129					
C 130	ENGINE CPT-UNLOADER	ITT SS	2	561813	561812
C 131	ENGINE CPT-UNLOADER	ITT SS	2	561813	561812
C 132	ENGINE CPT-A/C LO PRESS SW	PED WP	2	561566	561690
C 133	ENGINE CPT-A/C HI PRESS SW	PED WP	2	561566	561690
C 134	FR JCT BOX-LUGGAGE DIODE CON.	AMP MNL	15	561987	561986
C 135	FR JCT BOX-LUGGAGE DIODE CON.	AMP MNL	15	561987	561986
C 136	RR JCT BOX - A/C PANEL DIODE CONN.	AMP MNL	15	561987	561986
C 137	RR JCT BOX-TRANSMITTER	AMP MNL	2	560900	560898
C 138	RR JCT BOX-CONTROL MODULE	AMP HDP	15	------	562012
C 139	RR JCT BOX-LOGIC MODULE	AMP HDP	15	562011	------
C 140	HVAC DASH MODULE THERMOMETER	MOLEX	4		562782
C 141	INSTRUMENT PANEL LH UNLOAD TAG	AMP	2	561248	561247
C 142	LAVATORY DOOR WALL	AMP MNL	2	561248	561247
C 143					
C 144	UNDER LH SEAT-AISLE LTS	AMP MNL	4	560851	560852
C 145	RR JCT BOX CPT-RR SIDE LTS	AMP MNL	9	561670	561669
C 146	ENGINE CPT-MODULATOR VALVE	AMPHENOL	2	------	560412
C 147	BATT & RR J.B.CPT-DOCK.LTS	PED WP	2	561566	561690
C 148					
C 149	CONDENSER CPT-FAN MOTOR	ORDNANCE	3	562555	562001
C 150					
C 151	EVAPORATOR CPT-THERMOSTAT	ITT SS	2	561813	562159
C 152	CONDENSER CPT-FUEL GAUGE	PED WP	4	561610	561611
C 153	EVAPORATOR CPT-AIR AMB. SENS	AMP MNL	2	561248	561247
C 154	EVAPORATOR CPT-FRESH AIR SENS	ITT SS	2	561813	561812
C 155	EVAPORATOR CPT-WATER VALVE	PNEUMAC	4	563204	
C 156	EVAPOR. CPT-BYPASS WATER VAL.	PED WP	2	561566	561690
C 157					
C 158	CONDENSER CPT-A/C LO TEMP.	PED WP	2	561566	561690
C 159	CONDENSER CPT-A/C HI TEMP.	PED WP	2	561566	561690
C 160	FR AXLE-ABS RH SENSOR	WABCO	2	641132	------
C 161	FR AXLE-ABS RH VALVE	WABCO	3	------	641098
C 162	FR AXLE-ABS LH VALVE	WABCO	3	------	641098
C 163	FR AXLE-ABS LH SENSOR	WABCO	2	641132	------
C 164	RR AXLE-ABS LH SENSOR	WABCO	2	641132	------
C 165	RR AXLE-ABS LH VALVE	WABCO	3	------	641098
C 166	RR AXLE-ABS RH VALVE	WABCO	3	------	641098
C 167	RR AXLE-ABS RH SENSOR	DEUTSCH	2	641132	------
C 168	RR AXLE-ABS OPT ATC	PED WP	2	561566	561690
C 169	RR JCT BOX-SPEED SW	AMP HDP	15	------	562012
C 170	FR JCT BOX-FLASHER UNIT	TC	2	------	561940
C 171	LH CONSOLE	AMP CPC	24	561642	561643
C 172					
C 173					
C 174	UNDER DASH RH-HTR MODULE	AMP MNL	9	561670	561669
C 175	UNDER DASH RH-HTR MODULE	AMP MNL	9	561670	561669
C 176	UNDER DASH RH-WIPER PULSE	AMP FF	6	------	561186
C 177	UNDER DASH RH-WIPER MOTOR	AMP FF	6	------	561186
C 178	UNDER DASH RH-LH FAN	TC	2	561030	560997
C 179	UNDER DASH RH-RH FAN	TC	2	561030	560997
C 180	RR JCT BOX-DIODE CONNECTOR	AMP MNL	15	561987	561986
C 181	RR JCT BOX-DIODE CONNECTOR	AMP MNL	15	561987	561986
C 182					
C 183	FR SERVICE CPT-KNEELING PAN.	PED WP	4	561610	561611
C 184	FR SERVICE CPT-KNEELING SW	ITT SS	3	561111	561080
C 185					
C 186					

NO	LOCATION	TYPE	CAVITY	#PIN HOUSING	#SOCKET HOUSING
C 186M	RR JCT BOX CPT.-SPD SIGN. M.TR	PED WP	2	561566	561690
C 186W	RR JCT BOX CPT.-SPD SIGN. WT	PED WP	2	561566	561690
C 187	FR JCT BOX-RPM RESISTOR CON.	AMP MNL	6	561552	561515
C 188					
C 189	ENGINE CPT RR DOOR B/U LT	TRUCK-LITE	2	------	562755
C 190	ENGINE CPT RR DOOR TAIL/ STOP LT	SUPER SEAL	3		562601
C 191	ENGINE CPT RR DOOR RH TAIL/STOP LT	SUPER SEAL	3		562601
C 192	ENGINE CPT RR DOOR DIR. LT	SUPER SEAL	3		562601
C 193					
C 194					
C 195					
C 198	ENGINE CPT RR DOOR LICENCE LT	PED WP	2	562348	562471
C 199					
C 200	RH HAT RACK-FLUORESCENT	AMP MNL	2	561248	561247
C 201	RH HAT RACK-FLUORESCENT	AMP MNL	2	561248	561247
C 202	RH HAT RACK-INDIRECT LIGHTING	MOLEX	2	---------	562758
C 203	RH HAT RACK-INDIRECT LIGHTING	MOLEX	6	---------	562759
C 204	RH HAT RACK-GENERAL LT	AMP MNL	2	560900	560898
C 205	FR SECT.-RH HAT RACK SPEAKER	AMP MNL	9	561661	561662
C 206	RH HAT RACK-READING LT	AMP FF	4	----------	562756
C 207	LH HAT RACK-READING LT	AMP FF	4	----------	562756
C 208	LH HAT RACK-BALLAST	MOLEX	2	----------	562758
C 209	LH HAT RACK HOTESS CHIME	AMP MNL	3	561667	561550
C 210	FR SECT.-LH HAT RACK SPEAKER	AMP MNL	9	561661	561662
C 211	FR ROOF-STORE LH	AMP MNL	2	560900	560898
C 212	FR ROOF-STORE RH	AMP MNL	2	560900	560898
C 213					
C 214	ENGINE CPT J1922				
C 215	TAG AXLE - A.T.C. SYSTEM				
C 216	TAG AXLE - A.T.C. SYSTEM				
C 217	RH DASH PANEL-FRONT CAMERA SW	EATON	8	--------	562763
C 218	RH DASH PANEL-FRONT CAMERA SW	AMP MNL	2	560900	560898
C 219	ENGINE CMPT. – FIRE DETECTOR	DEUTSCH	2	562486	562485
C 220	RR.JCT.BOX-FUEL PRIME PUMP	TC	1	561070	561073
C 221	BATTERY CMPT. FIRE DETECTOR	DEUTSCH	2	562486	562485
C 222	ENGINE CMPT. FIRE DETCTOR	DEUTSCH	2	562486	562485
C 223	ENGINE CMPT. FIRE DETCTOR	DEUTSCH	2	562486	562485
C 224	ENGINE CMPT. -VORAD J1939	DEUTSCH	3	562877	562884
C 225	ENGINE CMPT. -VORAD J1939	DEUTSCH	3	562877	562884
C 226	FR LH UPPER WHEEL CPT-VORAD J1939	DEUTSCH	3	562677	562884
C 227					
C 228					
C 229					
C 230	ENG.CPT.-FUEL PRIME PUMP FEED	DEUTSCH	2	562486	562485
C 231	ENG.CPT.-FUEL PRIME PUMP SW.	PED WP	2	561566	561690
C 232	ENG.CPT.-FUEL PRIME PUMP	PED WP	2	561566	561690
C 233	FR. SERVICE COMPT.	VDO	8		562043
C 234	FR. SERVICE COMPT.	VDO	8		562044
C 235	FR. SERVICE COMPT.	VDO	8		562041
C 236	LUGGAGE COMPARTEMENT	AMP MNL	4	560851	560852
C 237	UNDER DASH LH-JACOB CLUTCH SW	ITT SS	3	561111	561080
C 238	UNDER DASH LH-PASS. REC. DAMPER SW	EATON	8	------	562763
C 239	FR SERVICE CPT-HI BUOY VALVE	PED WP	2	561566	561690
C 240	FR SERVICE CPT-KNEEL PROX SW	PED WP	3	561781	562428
C 241	HEADLAMPS HI BEAM	HELLA	2		562623
C 242	HEADLAMPS LO BEAM	HELLA	2		562623
C 243	FR SERVICE CPT. HEADLAMPS	DEUTCH	3	565131	562789
C 244	FR SERVICE CPT-LH FOG LAMP	DEUTCH	2	562902	562901
C 245	FR SERVICE CPT-RH FOG LAMP	DEUTCH	2	562902	562901
C 246	FR SERVICE CPT. MIRROR	CONXALL	5	563091	563090
C 247	HEADLAMPS MARK & DIR LTS	AMP SUPER S	3		562601
C 248	FR JCT BOX-WIPER PULSE GEN	AMP FF	6	------	561108
C 249					
C 250	LH CONSOL PANEL- LOW BOY	PED	2	561566	561690
C 251	LH DASH PANEL-FAST IDLE SW	EATON	8	------	562763
C 252					
C 253	LH DASH PANEL-ETHER SW	EATON	8	------	562763

CONNECTORS CODE

NO	LOCATION	TYPE	CAVITY	#PIN HOUSING	#SOCKET HOUSING
C 254	INST. PANEL RH-ENTR.DOOR SW.	TORRIX	5	------	562110
C 255	LH DASH PANEL-JACOB & RETARDER SW	EATON	8	------	562763
C 256					
C 257					
C 258	LH SW PANEL-MULTI FUNC. SW	AMP FF	8	561188	------
C 259	LH SW PANEL-MULTI FUNC. SW	AMP FF	6	------	561108
C 260	FR SERVICE CPT-LUG DOOR LCK	PED WP	6	561606	561607
C 261	UNDER DASH RH-DOOR MODULE	AMP MNL	9	561670	561669
C 262	UNDER DASH RH-DOOR MODULE	AMP MNL	4	561551	561668
C 263	UNDER DASH RH-DOOR MODULE	AMP MNL	3	561667	561550
C 264	UNDER DASH RH-DOOR MODULE	AMP MNL	3	561667	561550
C 265	UNDER DASH RH-DOOR MODULE	AMP HDP-20	15	562011	562012
C 266					
C 267	UNDER DASH RH	AMP CPC	24	561642	561643
C 268	UNDER DASH LH-MIRROR	AMP MNL	6	561552	561515
C 269	UNDER DASH RH-MIRROR	AMP MNL	6	561552	561515
C 270	LH MIRROR POST	MOLEX	6	562070	562069
C 271	RH MIRROR POST	MOLEX	6	562070	562069
C 272	LH MIRROR	SPARTAN	6	------	990158
C 273	RH MIRROR	SPARTAN	6	------	990158
C 274	RR. JCT. BOX – SIGNAL ALT. MODULE	AMP MNL	12	561735	561734
C 275	UNDER DASH RH-DOOR MODULE	AMP MNL	9	561670	561669
C 276	UNDER DASH RH-LOCK SOL.VALVE	AMP MNL	2	561248	561247
C 277					
C 278					
C 279 *	FR SERVICE CPT.- STEERING ZF	DEUTCH	2		562486
C 279	UNDER DASH CYLINDER READ SW.	AMP MNL	2	561248	561247
C 280	LH CONSOLE-UNLOAD TAG SW.	NGR	10	------	562763
C 281					
C 282					
C 283					
C 284					
C 285					
C 286	RH SW PANEL-A/C & HEAT	EATON	8	------	562763
C 287	ENGINE COMPT-LTS SW	PED WP	2	561566	561690
C 288	RH SW PANEL-FRESH AIR	EATON	8	------	562763
C 289					
C 290					
C 291					
C 292					
C 293					
C 294					
C 295					
C 296					
C 297	INSTRUMENT PANEL RH -LTS	AMP MNL	2	560900	560898
C 298					
C 299	RH DASH PANEL SW-GALLEY	EATON	8	------	562763
C 300					
C 301					
C 302					
C 303					
C 304					
C 305					
C 306					
C 307					
C 308	LH CONSOLE SW-RHEOSTAT	TC	2	561030	560997
C 309	DDEC ENGINE-ECM POWER CON.	PED MP	5	------	562345
C 310	LH DASH PANEL -LUG. DOOR LCK SW	EATON	8	------	562763
C 311	RH DASH PANEL -HOS & PAS CHIME SW	EATON	8	------	562763
C 312	RH DASH PANEL -READING LTS SW	EATON	8	------	562763
C 313	RH DASH PANEL -GEN & FLUOR LTS SW	EATON	8	------	562763
C 314	LH DASH PANEL-FR DEST. SIGN SW	EATON	8	------	562763
C 315	LH DASH PANEL-LH STORE SW	EATON	8	------	562763
C 316	LH CONSOLE SPARE SWITCH	EATON	8	------	562763
C 317	LH DASH PANEL-RH STORE SW	EATON	8	------	562763
C 318	LH CONSOLE SW-DRV WINDOW LIFT	EATON	8	------	562763
C 319					

NO	LOCATION	TYPE	CAVITY	#PIN HOUSING	#SOCKET HOUSING
C 320	RH DASH PANEL-DRIVER'S LTS SW	EATON	8	------	562763
C 321	READING LTS TEST				
C 322	LH CONSOLE DRV WIND LIFT MOT	PED PO	2	------	561848
C 323	LH CONSOLE CRUISE CTR SW PAN. AMP	CPC	9	561636	561637
C 324					
C 325	LH DASH PANEL-KNEELING SW	EATON	8	------	562763
C 326	ENGINE CMPT.	PED	4	------	561610
C 327	ENGINE CONTROL	DEUTSCH	6	562583	562581
C 328	GALLEY-LAMP	AMP MNL	2	561248	561247
C 329	ENGINE TACHO SIGNAL	PED WP	3	561781	561789
C 330					
C 331	GALLEY MICROWAVE SW	EATON	8	------	562763
C 332					
C 333	GALLEY RH CONTAINER SW	EATON	8	------	562763
C 334	GALLEY LH CONTAINER SW	EATON	8	------	562763
C 335					
C 336					
C 337	INSTR PANEL LH-UP WIPER SW	EATON	8	------	562763
C 338	INSTR PANEL LH-UP DEFROST SW	EATON	8	------	562763
C 339	INSTR PANEL LH-UP WASHER SW	EATON	8	------	562763
C 340	FR JCT. BOX FIRE PIEZO ALARM	AMP MNL	2	560900	560898
C 341	INSTR PANEL LH-HEAT MIRROR SW	EATON	8	------	562763
C 342	ENGINE RR START SW	DEUTSCH	2	562586	562585
C 343	INSTR PANEL LH-HEADLAMP SW	EATON	8	------	562763
C 344	INSTR PANEL LH-HAZARD LT SW	EATON	8	------	562763
C 345	INSTR PANEL LH-FOG LT SW	EATON	8	------	562763
C 346					
C 347	INSTR PANEL LH-DASH LT SW	AMP MNL	2	560900	560898
C 348	INSTR PANEL CENT-RACOR MODULE	MOLEX	6	562070	562067
C 349					
C 350	RH CONSOLE-THERMOMETER	AMP MNL	3	561667	561550
C 351	LH HAT RACK-FLUOR 110V	MOLEX	4	561477	561476
C 352	RH CONSOLE-DRV TEMP SENSOR	BURNDY	4	------	561104
C 353	INSTR PANEL RH-DRV FAN RHEOST	AMP MNL	6	561552	561515
C 354	INSTR PANEL RH-DRV TEMP CTR	AMP MNL	6	561552	561515
C 355	INSTR PANEL RH-FR TEMP CTR	AMP MNL	3	561667	561550
C 356					
C 357	INSTR PANEL RH-WATER TEMP GA	AMP MNL	3	561667	561550
C 358	INSTR PANEL RH-FUEL LEVEL GA	AMP MNL	3	561667	561550
C 359					
C 360					
C 361	FR ROOF-WIPER MOTOR	AMP FF	6	------	561186
C 362	FR ROOF-LAVATORY OCCUPIED LT	AMP MNL	2	561248	561247
C 363	FR ROOF-WATCH YOUR STEP LT	AMP MNL	2	561248	561247
C 364	FR ROOF-DESTINATION SIGN	AMP MNL	3	561667	561550
C 365	FR ROOF-UP WINDSHIELD DEFROST	AMP MNL	3	561667	561550
C 366	RH DASH PANEL-GRN & RED LEDS	AMP MNL	3	560908	562006
C 367	ENGINE COMPT-DIF OIL T SENSOR	PED WP	2	561566	561690
C 368	FR ROOF-DEST. SIGN BALLAST	AMP MNL	3	561667	561550
C 369	FR ROOF-DEST. SIGN OPER. SW	TORRIX	5	------	562110
C 370	FR ROOF-DEST. SIGN FLUOR.	AMP MNL	2	560900	560898
C 371	FR ROOF-DEST. SIGN FLUOR.	AMP MNL	2	560900	560898
C 372	FR ROOF-DEST. SIGN SPEED SW	MOLEX	4	561477	561476
C 373	FR ROOF-NO SMOKING LT	AMP MNL	2	561248	561247
C 374	LH SWITCH PANEL	AMP MNL	6	561552	561515
C 375					
C 376					
C 377	LH DASH PANEL-STOP ENG.OVERIDE SW	EATON	8	------	562763
C 378					
C 379					
C 380	LH CONSOLE-DDR CONNECTOR	DEUTSCH	6	562360	------
C 381					
C 382					
C 383					
C 384					
C 385	EVAPOTATOR COMP WATER PUMP	PED WP	2	561566	561690
C 386	LH DASH PANEL-WCL POWER SYSTEM SW	EATON	8	------	562763

CONNECTORS CODE

NO	LOCATION	TYPE	CAVITY	#PIN HOUSING	#SOCKET HOUSING
C 387	RR JCT BOX (WCL)	AMP MNL	9	561661	561662
C 388	RR JCT BOX (WCL)	AMP MNL	12	561735	561734
C 389	WCL REAR DOOR	MOLEX	4	561477	561476
C 390	LAVATORY WALL-WCL REMOTE CTR	EATON	8	------	562763
C 391	LAVATORY WALL-WCL LAMP	EATON	8	------	562763
C 392	LAVATORY WALL-WCL SW. LT.	EATON	2	------	561835
C 393	LAVATORY WALL-WCL REMOTE SYS.	AMP CPC	4	561686	561687
C 394	UNDER INSTR. PANEL- B/U MONITOR	AMP MNL	4	560851	560852
C 395	DRIVER'S COMPT. - B/U MONITOR	AMP	5	------	------
C 396	FR SECT. LH HAT RACK-SPEAKER	MOLEX	4	562507	562503
C 397	ENGINE COMPT. CRADLE ACC.	DEUTSCH	40	562281	562284
C 398					
C 399	ENGINE COMPT. – PRE-EXITATION ALT.	PED WP	2	561566	561690
C 400	ENGINE COMPT. BLOCK HEATER	PED MP	3	561781	561782
C 401					
C 402					
C 403	GALLEY FRIGO NORCOLD	AMP MNL	2	561248	561247
C 404	GALLEY LAMP	AMP MNL	2	561248	561247
C 405	LAST LUGGAGE COMP.- INVERTER SIGNAL	AMP MNL	2	561248	561247
C 406	FR JCT BOX COMPT.-ABS	AMP MNL	2	560900	560898
C 407					
C 408					
C 409	ENGINE CPT -LOW COOL. LEVEL	PED MP	2	------	562350
C 410	FR JCT BOX-DIODE CONNECTOR	AMP MNL	15	561987	561986
C 411	FR JCT BOX-DIODE CONNECTOR	AMP MNL	15	561987	561986
C 412	LH DASH PANEL-MASTER SWITCH SW	EATON	8	------	562763
C 413	ENG CPT-A/C HI UNLOAD PRS SW	PED WP	2	561566	561690
C 414					
C 415	RR JCT BOX – ENGINE SIGNAL	DEUTSCH	24	562280	562283
C 416	ENGINE CRADLE-ENGINE SIGNAL	FCI	10	563207	------
C 417	FRONT JCT BOX-DIODES	AMP MNL	15	561987	561986
C 418	LH DASH PANEL-HTR WINDSH.SW	EATON	8	------	562763
C 419	FR JCT BOX-RETARDER OR JACOB	AMP MNL	3	561667	561550
C 420					
C 421					
C 422					
C 423					
C 424	UNDER INSTRUMENT PANEL CENTER	AMP MNL	3	561667	561550
C 425	FR JCT BOX-DIODES	AMP MNL	15	561987	561986
C 426	ENGINE COMPT. CLUTCH CTR FAN	PED WP	3	561781	561782
C 427	PRO-HEAT	PED-WP	2	561566	561680
C 428	PRO-HEAT	PED WP	6	561606	561607
C 429	FR JCT BOX COMPT.	AMP MNL	6	561552	561515
C 430	LH CONSOLE-TIMER	AMP FF	8	561188	562363
C 431	LH CONSOLE-PRE HEAT.	TAB AMP	1	561540	561539
C 432	ENGINE CPT.-PROX. SW. DOOR AJAR	PED-WP	2	561566	561680
C 433	FR SERVICE CPT. KNEEL. PRESS. SW	PED WP	2	561566	561690
C 434	FRONT JCT. BOX-DIODES	AMP MNL	15	561987	561986
C 435	FR SERVICE CPT.(RH) KNEEL. PIEZO	AMP MNL	2	560900	560898
C 436	RH HAT RACK-WCL CENTER ROOF ACC	AMP CPC	16	561639	561640
C 437	RH HAT RACK-WCL FR & RR SECT.	AMP CPC	24	561642	561643
C 438	EVAP CMPT- A/C CONTROL	AMP MNL	2	561248	561247
C 439	EVAP CMPT- A/C CONTROL	AMP MNL	2	561248	561247
C 440	EVAP CMPT- A/C CONTROL	DEUTSCH	4	562479	562477
C 441	FR JCT BOX- DIODES	AMP MNL	15	561987	561986
C 442					
C 443					
C 444					
C 445					
C 446					
C 447					
C 448					
C 449					
C 450	SOUND SYS. JCT. PANEL	MOLEX	4	562507	562503
C 451	WIRELESS MICRO-FIRST CPT BAG	MOLEX	2	562550	562549
C 452	UNDER DASH INSTR. PANEL	MOLEX	2	562550	562549
C 453	SOUND SYS. JCT.PANEL-VCP	PED WP	2	561566	561680

NO	LOCATION	TYPE	CAVITY	#PIN HOUSING	#SOCKET HOUSING
C 454	SOUND SYS.JCT.PAN.-FILT. VCP	PED WP	2	561566	561680
C 455	WIRELESS MICRO-LH HAT-RACK	MOLEX	6	------	562464
C 456	WORLD TRANSM.-RETARDER ACCUM.	PED MP	2	------	562427
C 457	WORLD TRANSM.-MAIN CONNECTOR	DEUTSCH	31	562572	562536
C 458	WORLD TRANSM.-TURBINE SP.SENS	PED MP	2	------	562426
C 459	WORLD TRANSM.-ENGINE SP.SENS.	PED MP	2	------	562426
C 460	WORLD TRANSM.-SPEED SENSOR	ITT	2	------	562541
C 461	WORLD TRANSM.-RETARDER TEMP.	PED MP	2	561566	561680
C 462	WORLD TRANSM.-RETARD SOL."K"	PED MP	2	------	562426
C 463	WORLD TRANSM.-SENSOR CONN.	DEUTSCH	16	562570	562571
C 464	RR JCT BOX-DDR CONNECTOR	DEUTSCH	6	------	562360
C 465	LH CONSOLE-SHIFTER SELECTOR	PED	20	------	562825
C 466	FR SERVICE CPT.-RESIS. MOD.	PED WP	3	------	562428
C 467	FR SERVICE CPT.-RESIS. MOD.	PED WP	3	------	562428
C 468			8		
C 469					
C 470	FR LH UPPER WHELL CPT-SILENT 1000	AMP MNL	2	561248	561247
C 471	FR LH UPPER WHELL CPT-SILENT 1000	AMP MNL	2	561248	561247
C 472	FR LH UPPER WHELL CPT-SILENT 1000	PED WP	2	561566	561690
C 473	FR LH UPPER WHELL CPT-SILENT 1000	AMP MNL	3	561667	561550
C 474	DRIVER CPT.-TEMP. SENSOR	AMP MNL	2	561247	561248
C 475	RR JCT BOX-SPEED SIGN CONNECTOR	DEUTSCH	2	562486	562485
C 476					
C 477					
C 478	ELECTRONIC DESTINATION SIGN	AMP CPC	9	561636	561637
C 479	HVAC MODULE	MOLEX	3		562783
C 480	UNDER DASH LH-DR. FAN SPEED CTR. MOD	PED	4	561889	561890
C 481	UNDER DASH LH-DR. FAN SPEED CTR. MOD	PED	3	561781	561782
C 482					
C 483	FR SERVICE CPT. (NOT USED)	PED PC	2	------	562237
C 484	UNDER DASH LH.-FOOT DAMPER MOTOR	PED PC	2	------	562076
C 485	UNDER DASH LH.-DASH & DEFR. DAM.MOT.	AMP MNL	3	561667	561550
C 486					
C 487	S.S.PANEL – AUDIO IN AMPLI	MOLEX	4	------	563071
C 488	S.S.PANEL – AMPLI SIGNAL	MOLEX	8	------	562465
C 489	S.S.PANEL – SPEAKER OUTLET	MOLEX	6	------	562464
C 490					
C 491					
C 492					
C 493					
C 494					
C 495					
C 496					
C 497					
C 498					
C 499					
C 500	FR LH UPPER WHELL CPT -PRODRIVER	MOLEX	6	562070	562069
C 501	FR LH UPPER WHELL CPT -PRODRIVER	PED MP	7	562433	------
C 502	LH DASH PANEL-PRE HEATER SW.	EATON	8	------	562763
C 503	LH CONSOLE-PRE HEATER SW.	EATON	2	------	561837
C 504	LH CONSOLE WEBASTO TIMER	AMP	8	------	562852
C 505	LH CONSOLE ESPAR TIMER	AMP	9	------	562681
C 506	FR JCT BOX CPT. DIGITAL CLOCK	AMP	4	561685	561687
C 507	FR SECT. LH HAT-RACK DIG. CLOCK	MOLEX	4	561477	561476
C 508	RR JCT BOX-FAN CLUTCH RETARDER	AMP MNL	6	561552	561515
C 509	FR LH UPPER WHELL CPT -DATA LOGGER	PED MP	16	------	562530
C 510	FR LH UPPER WHELL CPT -DATA LOGGER	DEUTSCH	9	562531	------
C 511	FR LH UPPER WHELL CPT -DATA LOGGER	PED MP	4	562532	------
C 512	FR LH UPPER WHELL CPT -DATA LOGGER	PED MP	10	562533	------
C 513	FR LH UPPER WHELL CPT -DATA LOGGER	AMP MNL	3	561667	561550
C 514	FR LH UPPER WHELL CPT -DATA LOGGER	PED MP	6	562433	562417
C 515	FR JCT BOX CPT.-INTERCOM	MOLEX	4	561477	561476
C 516	FR JCT BOX CPT.-INTERCOM	MOLEX	6	562070	562069
C 517	LAVATORY WALL-INTERCOM	MOLEX	6	562070	562069
C 519	UNDER DASH RH-SEDAN DOOR	HUMPHREY	2	------	562580
C 520	UNDER DASH RH-SEDAN DOOR	HUMPHREY	2	------	641385
C 521	UNDER DASH RH-SEDAN DOOR	HUMPHREY	2	------	641385

CONNECTORS CODE

NO	LOCATION	TYPE	CAVITY	#PIN HOUSING	#SOCKET HOUSING
C 522					
C 523	FR JCT BOX-FUSE BLOCK	PED	8	562647	562646
C 524	FR JCT BOX-FUSE BLOCK	PED	8	562647	562646
C 525	FR JCT BOX-FUSE BLOCK	PED	8	562647	562646
C 526	FR JCT BOX-FUSE BLOCK	PED	8	562647	562646
C 527	FR JCT BOX-FUSE BLOCK	PED	8	562647	562646
C 528	FR JCT BOX-FUSE BLOCK	PED	8	562647	562646
C 529	FR JCT BOX-12V OUTLET	AMP MNL	2	561247	561248
C 530	RR JCT BOX-FUSE BLOCK	PED	8	562647	562646
C 531	RR JCT BOX-FUSE BLOCK	PED	8	562647	562646
C 532	RR JCT BOX-FUSE BLOCK	PED	8	562647	562646
C 533	RR JCT BOX-FUSE BLOCK	PED	8	562647	562646
C 534	RR JCT BOX-FUSE BLOCK	PED	8	562647	562646
C 535	RR JCT BOX-FIRE MODULE DETECT.	AMP MNL	3	561667	561550
C 536	UNDER DASH RH-DRIVER'S HTR TEMP. CTR	AMP MNL	6	561552	561515
C 537	BATT. CPT.-A/C PRESS. SIGN. RLY	AMP MNL	2	561248	561247
C 538	FR SERVICE CPT.-OUTSIDE TEMP. SENSOR	AMP MNL	2	561248	561247
C 539	HVAC DASH MODULE OUTPUT CON	MOLEX	24		562780
C 540	HVAC DASH MODULE INPUT CON	MOLEX	22		562781
C 541	SOUND SYS. JCT PANEL-AUDIO SEAT SYS.	PED WP	2	561566	561690
C 542	LH HAT RACK-AUDIO SEAT SYSTEM	AMP MNL	3	561667	561550
C 543					
C 544	SOUND SYS JCT PANEL-AUDIO SEAT SYS.	PED WP	3	561781	562428
C 545	LH HAT RACK-AUDIO SEAT SYSTEM	AMP MNL	3	561667	561550
C 546	WIRELESS MIC. CHARGING SYSTEM	MOLEX	2	--------	563025
C 547	RH DASH PANEL-ACCESSORIES	AMP CPC	37	561645	561646
C 548	LH DASH PANEL-T.T. LT. TEST SW.	EATON	8	------	562763
C 549	LH DASH PANEL-FAN CLUTCH OVERR. SW	EATON	8	------	562763
C 550	LAST LUGG. CPT. -WCL RICON	AMP CPC	16	561694	561695
C 551	LAST LUGG. CPT. -WCL RICON	AMP CPC	16	561694	561695
C 552	LAST LUGG. CPT. -WCL RICON	AMP CPC	9	561636	561637
C 553	UNDER DASH R.H. - CONTROL. HEAD	MOLEX	16	---------	562559
C 554	UNDER DASH R.H. - CONTROL. HEAD	MOLEX	16	---------	562559
C 555	UNDER DASH R.H. - CONTROL. HEAD	MOLEX	16	---------	562559
C 556	UNDER DASH R.H. - RADIO ACC.	MOLEX	2	562550	562549
C 557	UNDER DASH R.H. - RADIO ACC.	MOLEX	9	562556	562555
C 558	UNDER DASH R.H. - RADIO ACC.	MOLEX	4	562507	562503
C 559	SOUND SYS. JCT. PANEL – FILTER AMPLI	PED WP	2	561566	561690
C 560	SOUND SYS. JCT. PANEL – POWER AMPLI	MOLEX	4	562507	562503
C 561	L.H. HAT RACK - WIRELESS MICRO	MOLEX	8		562465
C 562	L.H. HAT RACK - VCP	MOLEX	12	562556	563070
C 563	L.H MODESTY PANEL - DRIVERS SPK.	MOLEX	4	562507	562503
C 564	L.H MODESTY PANEL - MICRO	MOLEX	4	562507	562503
C 565	R.H MODESTY PANEL - MICRO	MOLEX	4	562507	562503
C 566	L.H. CONSOLE - BOOM MICRO	MOLEX	4	562507	562503
C 567	L.H. CONSOLE - DRIVERS MICRO	MOLEX	4	562507	562503
C 568	SOUND SYS. JCT. PANEL - PASS. SPK	CINCH	4	562553	562552
C 569	SOUND SYS. JCT. PANEL - POWER AMPLI.	MOLEX	9	562556	562555
C 570	UNDER DASH PANEL TTLT	MOLEX	6		562464
C 571	UNDER DASH PANEL TTLT	MOLEX	20		562778
C 572	UNDER DASH PANEL TTLT	MOLEX	18		562779
C 573	UNDER DASH PANEL TTLT	MOLEX	8		562465
C 574	HAT -RACK FLUOR. INDIRECT LIGHTING	MOLEX	6	----------	562759
C 575	HAT -RACK FLUOR. INSTATION LIGHT	MOLEX	4	562507	562503
C 576	HAT -RACK FLUOR. INDIRECT LIGHTING	AMP MNL	3	561667	561550
C 577	HAT -RACK FLUOR. INDIRECT LIGHTING	AMP MNL	3	561667	561550
C 578	HAT -RACK FLUOR. INSTATION LIGHT	MOLEX	4	562507	562503
C 579	L.H HAT RACK – VCP POWER	MOLEX	4		563071
C 580	RH DASH PANEL-HAT RACK FAN SW	EATON	8	--------	562763
C 581					
C 582	FRONT SERVICE CMPT. - WINDOWS AJAR	PED WP	2	561566	561690
C 583	L.H. DASH PANEL - MASTER KEY	DEUTSCH	2	562486	562485
C 584	FRONT SERVICE CMPT. - AIR HORH	HUMPHREY	3	--------	641385
C 585					
C 586					
C 587	LH PARCEL RACK DVD UNIT	MOLEX	4	563040	563071
C 588	FRONT SERVICE CPT. CENTER SOUND SYS.	AMP. CPC	37	561645	561646

NO	LOCATION	TYPE	CAVITY	#PIN HOUSING	#SOCKET HOUSING
C 589	UNDER DASH - L.H. MIRROR	AMP MNL	9	561670	561669
C 590	UNDER DASH - R.H. MIRROR	AMP MNL	9	561670	561669
C 591	L.H.CONSOLE - MIRROR L.H.	EURAMTEC	8	--------	562799
C 592	L.H.CONSOLE - MIRROR R.H.	EURAMTEC	8	--------	562799
C 593	BATTERY CMPT. - CHARGER	PED WP	3	561781	561782
C 594	FRONT ROOF - DRIVERS LIGHT	LEEKRAFT		---------	562803
C 595	DASH CENTER MODULE - OPEN DOOR	MOLEX	4	561477	561476
C 596	DASH CENTER MODULE - CLOSE DOOR	MOLEX	4	561477	561476
C 597	L.H. DASH PANEL - DISPLAY SET SW.	MOLEX	5		562812
C 598	L.H. DASH PANEL - DISPLAY SET SW.	MOLEX	5		562812
C 599					
C 600	ENGINE CPT.-A/C LOW PRESS SW. UNLOAD	PED	2	562348	562471
C 601	L.H. ROOF - WINDOW AJAR	AMP MNL	2	561248	561247
C 602	L.H. ROOF - WINDOW AJAR	MOLEX	4	561477	561476
C 603	R.H. ROOF - WINDOW AJAR	AMP MNL	2	561248	561247
C 604	LH PARCEL RACK DVD VIDEO STABILIZER	SWITCHCRAFT	1	563074	
C 605	HAT RACK - MOTOR FAN	PED	2	560997	561030
C 606	HAT RACK - MOTOR FAN	PED	2	560997	561030
C 607					
C 608	FRONT SERVICE CMPT. SPEED SIGNAL	PED WP	2	561566	561690
C 609	LAVATORY - NIGHT LIGHT				
C 610					
C 611	HAT RACK READING LTS RICON	MOLEX	6	562558	562557
C 612	HAT -RACK FLUOR. INSTATION LTS RICON	MOLEX	4	562507	562503
C 613	HAT -RACK INDIRECT LTS RICON	AMP MNL	3	561667	561550
C 614	HAT -RACK INDIRECT LTS RICON	AMP MNL	3	561667	561550
C 615	LH PARCEL RACK DVD SING ALONG ADAPT.	MOLEX	2	562550	562549
C 616					
C 701	ZF TRANSMISSION ECU	KOSTAL	20		
C 702	SHIFT SELECTOR – LH CONSOLE	AMP	14		563338
C 712	NEUTRAL SWITCH ON ZF TRANSM. (TOP)	AMP	4		563340
C 714	OUTPUT SENSOR ON ZF TRANSM. (BOTTOM)	AMP	4		563340
C 717	BATT. CPT - MAIN CONNECTOR	AMP CPC	22	561642	561643
C 720	ENGINE COMPT – BLKHD CONNECTOR	DEUTSCH	31	563359	563358
C 721	LH CONSOLE – ZF TESTMAN DIAGNOSTIC	AMP MNL	6	563356	
C 723	ENGINE COMPT – FOR TRANSM.	DEUTSCH	3		562884
C 736	ENGINE COMPT – ZMTEC MODULE	PACKARD	30	563053	
C 740	DRIVE AXLE – EASY START SOL VALVE	LEONI	2	--	641949
C 742	BATT. CPT – FUSE BLOCK	AMP	8	562446	
C 745	FR SERV.COMPT – THROTTLE POS. SENSOR	PED WP	3	561781	
C 760	FR SERV. COMPT – TO J1939	DEUTSCH	3		
C 761	FR SERV. COMPT – TO J1939	DEUTSCH	3		562884
C 762	ENGINE COMPT – TO J1939	DEUTSCH	3		562884
C 763	ENGINE COMPT – TO J1939	DEUTSCH	3		562884
C 764	ENGINE COMPT – TO J1939	DEUTSCH	3		562884
C 765	ENGINE COMPT – TO J1939	DEUTSCH	3		562884
C 766	ENGINE COMPT – TO J1939	DEUTSCH	3		562884
C X	CLUSTER	JAE	22		562766
C Y	CLUSTER	JAE	30		562767
L X	CLUSTER	JAE	22		562764
L					
R					

CONNECTORS CODE

NO	LOCATION	TYPE	CAVITY	#PIN HOUSING	#SOCKET HOUSING
AA1	BEHIND DASH - SONALERT	BOSCH	5		561183
AA2	BEHIND DASH - SONALERT	BOSCH	5		561183
C X1	FR SERVICE COMPT- ECU ABS	AMP	15		563200
C X2	FR SERVICE COMPT- ECU ABS	AMP	18		563201
C RH	DDEC ENGINE- RELATIVE HUMIDITY SENS.	FCI	4		563277
C RXTX	HVAC DASN MODULE COMMUNICATION	MOLEX	3	563206	562873
C S	RR JCT BOX ECU WORLD TR.	PED	32		562817
C T	RR JCT BOX ECU WORLD TR.	PED	32		562824
C V	RR JCT BOX ECU WORLD TR.	PED	32		562823
		AMP CPC	9	561636	561637
C WX1	ENGINE CPT-WEBASTO PRE-HEAT WATER	AMP SEALED	7		563135
C WX3	ENGINE CPT-WEBASTO PRE-HEAT WATER	AMP SEALED	7	563136	
C Y	CLUSTER	JAE	30	---	562765
C 1	FR JCT BOX COMPARTMENT	AMP CPC	14	561585	561584
C 2	FR JCT BOX COMPARTMENT	AMP CPC	16	561639	561640
C 3	FR JCT BOX COMPARTMENT	AMP CPC	24	561641	561643
C 4	FR JCT BOX COMPARTMENT	AMP CPC	37	561644	561646
C 5	FR SERVICE COMPT.-UNDERNEATH	AMP CPC	37	561644	561646
C 6	FR SERVICE COMPT.-UNDERNEATH	AMP CPC	16	561639	561640
C 7					
C 8	FR SERVICE COMPT.-UNDERNEATH	AMP CPC	24	561641	561643
C 9	FR SERVICE COMPT.-UNDERNEATH	AMP CPC	24	561641	561643
C 10	LUGGAGE COMPT. WATER BOOSTER PUMP	PED	2	562348	562471
C 11	FR SERVICE COMPARTMENT	AMP CPC	37	561644	561646
C 12	FR SERVICE COMPARTMENT	AMP CPC	16	561639	561640
C 13	LH CONSOLE-CTR MIRROR	AMP MNL	6	561552	561515
C 14	UNDER DASH-LH MIRROR	AMP MNL	9	561661	561662
C 15	A/C CLUTCH	PED WP	2	561566	561690
C 16	LH CONSOLE SW-CRUISE ON OFF	EATON	10	------	562763
C 17	LH CONSOLE SW-CRUISE RESUME	EATON	10	------	562763
C 18	LH CONSOLE SW-CRUISE SET	EATON	10	------	562763
C 19	LH CONSOLE DECEL SW	EATON	10	------	562763
C 20	RR JCT BOX	DEUTSCH	70	562282	562285
C 21	RR JCT BOX	DEUTSCH	24	562280	562283
C 22	RR JCT BOX - EATON TRANSM.	AMP MNL	6	561552	561515
C 23	DDEC ENGINE-ECM J1939	PED MP	6	-------	561962
C 24	DDEC ENGINE-12Vi FOR OPTION	PED WP	1	-------	561577
C 25					
C 26	HYD & MAN TRANSM.-NEUT.& B/U	PED WP	4	561610	561611
C 27	HYD & MAN TRANSM.-SPEED SENS.	PED WP	2	561566	561690
C 28	EATON TRANSMISSION	DEUTCH	3	562877	562884
C 29	EATON TRANSMISSION	PED MP	6	562878	------
C 30	RR JCT BOX - ECU EATON TRANSM.	PED MP	32	------	562866
C 31	RR JCT BOX - ECU EATON TRANSM.	PED MP	24	------	562865
C 32	DDEC ENGINE-ECM	PED	30	------	561600
C 33	RR JCT BOX - EATON TRANSM.	DEUTCH	9	562531	------
C 34	RH. CONSOLE - EATON TRANSM. SHIFTER	PED MP	3	------	562871
C 35	RR JCT BOX	DEUTCH	40	562281	562284
C 36	RH. CONSOLE - EATON TRANSM. SHIFTER	PED MP	24	------	562874
C 37	RR SECTION-LH HAT RACK	MOLEX	6	562558	562557
C 38	RR SECTION-RH HAT RACK	MOLEX	6	562558	562557
C 39	LH CONSOLE - EATON TRANSM. DISPLAY	AMP MNL	4	561551	561668
C 40	RR JCT BOX - EATON TRANSM. J1939	DEUTCH	3	562877	562884
C 41	LAVATORY ROOF LIGHT	LEECRAFT	2	-----	562803
C 42	LAVATORY BACK WALL-WTR TANK	AMP MNL	2	560900	560898
C 43	LAVATORY BACK WALL-ACCES.	AMP MNL	9	561661	561662
C 44	EATON TRANSM. J1939	DEUTCH	3	562877	562884
C 45	FR JCT BOX COMPARTMENT	AMP CPC	24	561642	561643
C 46	EATON TRANSM. J1939	DEUTCH	3	562877	562884
C 47	FR SERVICE COMPARTMENT	AMP CPC	16	561694	561695
C 48	FR. SERVICE CMPT.PRESS SW PARKBREAK	DEUTCH	4	562479	562477
C 49	BATTERIE COMPT.-LT	AMP MNL	2	561248	561247
C 50	FR SERVICE COMPT.-LOW BUOY	PED WP	1	561605	561577
C 51					
C 52	RR JCT BOX	AMP CPC	24	561642	561643
C 53	SPARE TIRE COMPT ENTRANCE STEP LIGHT	DEUTCH	2	562486	562485
C 54	SPARE TIRE COMPT ENTRANCE STEP LIGHT	DEUTCH	2	562486	562485

NO	LOCATION	TYPE	CAVITY	#PIN HOUSING	#SOCKET HOUSING
C 55	RH SWITCH PANEL	AMP CPC	9	561636	561637
C 56	HAT RACK- MOTOR FAN	MOLEX	6	562558	562557
C 57	HAT RACK- MOTOR FAN	MOLEX	6	562558	562557
C 58	RR JCT BOX AC PANEL	DEUTSCH	24	562280	562283
C 59	RR JCT BOX AC PANEL	AMP CPC	14	561584	561583
C 60	RR JCT BOX COMPT.-LT	AMP MNL	2	561248	561247
C 61	LUGGAGE COMPARTMENT LTS	AMP MNL	2	561248	561247
C 62	LUGGAGE COMPARTMENT LTS	AMP MNL	2	561248	561247
C 63	LUGGAGE COMPARTMENT LTS	AMP MNL	2	561248	561247
C 64	LUGGAGE COMPARTMENT LTS	AMP MNL	2	561248	561247
C 65	LUGGAGE COMPARTMENT LTS	AMP MNL	2	561248	561247
C 66	LUGGAGE COMPARTMENT LTS	AMP MNL	2	561248	561247
C 67	LUGGAGE COMPARTMENT LTS	AMP MNL	2	561248	561247
C 68	LUGGAGE COMPARTMENT LTS	AMP MNL	2	561248	561247
C 69	RR AXLE ACC-INSIDE PVC END	PED WP	6	561568	561578
C 70	LH CONSOLE	AMP CPC	16	561642	561643
C 71	FR JCT BOX COMPARTMENT	AMP CPC	37	561645	561646
C 72	FR JCT BOX COMPARTMENT	AMP CPC	24	561642	561643
C 73	DASH CENTER PANEL	AMP CPC	16	561639	561640
C 74	FR JCT BOX COMPARTMENT	AMP CPC	37	561645	561646
C 75	SERV CPT. RXT. ENT. DOOR SW	DEUTSCH	4	562479	562477
C 76	LUGGAGE COMPT.-AIR RET.SENS.	AMP MNL	2	561248	561247
C 77	LUGGAGE COMPT.-AIR RET.SENS.	AMP MNL	2	561248	561247
C 78					
C 79					
C 80	LUGGAGE COMPT.-AIR RET.SENS.	AMP MNL	2	561248	561247
C 81	PASSENGER COMPT.-AISLE LTS	AMP MNL	2	560900	560898
C 82	ENTRANCE DOOR	MOLEX	6	562070	562069
C 83	ENTRANCE DOOR-PROIMITY SW	MOLEX	4	561477	561476
C 84	ENTRANCE DOOR-PRESSURE SW	PED WP	2	561566	561690
C 85	UNDER INSTRUMENT PANEL LH	AMP MTA-100	------	562248	------
C 86					
C 87	RR END ROOF	AMP CPC	9	561636	561637
C 88					
C 89	RR END ROOF-B/U NONITOR	AMP CPC	4	561582	561581
C 90	RR JCT BOX	AMP CPC	15	561987	561986
C 91	RR JCT BOX	AMP CPC	37	561714	561713
C 92	FR LH UPPER WHELL CPT-ABS	AMP CPC	9	561635	561637
C 93	FR LH UPPER WHELL CPT-ABS		35	------	641094
C 94	RH CONSOLE ENTRANCE STEP LIGHT	DEUTCH	2	562486	562485
C 95	CONDENSOR CPT - LIQ. SOL. VALVE	PED WP	2	561566	561690
C 96	FR AXLE ACCESSORIES	AMP CPC	14	561585	561585
C 97	RR AXLE ACC-INSIDE PVC END	PED WP	6	561568	561578
C 98	FR SERVICE COMPT-EL.FT.PEDAL	PED WP	3	561782	561781
C 99	FR SERVICE COMPT LTS	AMP MNL	2	561248	561247
C 100	LH CONSOLE – 120 VOLTS SWITCH	EATON	8	------	562763
C 101	FR SERVICE COMPT-ELEC. HORNS	PED WP	2	561566	561690
C 102	FR SERV & SIDE CPT-FLASH. LH	GROTE	2	------	562155
C 103	FR SERV & SIDE CPT-MARKERS	GROTE	2	------	562155
C 104	LAVATORY TRAP-FLUSH PUMP SW.	DEUTSCH	4	562479	562477
C 104	FR SERV & SIDE CPT-FLASH. RH	GROTE	2	------	562155
C 105	FR SERVICE COMPT-LIQ.S.VALVE	PED WP	2	561566	561690
C 106	FR SERVICE COMPT-WATER VALVE	PED WP	2	561566	561690
C 107					
C 108	FR SERVICE COMPT-KNEEL.SYS	PED WP	2	561566	561690
C 109	FR SERVICE COMPT-KNEEL.SYS	PED WP	2	561566	561690
C 110	FR SERVICE COMPT-KNEEL.SYS	PED WP	2	561566	561690
C 111	EVAPORATOR COMPT-DAMPER	DEUTSCH	2	562486	562485
C 112	LAVATORY BACK WALL-FLUSH PUMP SW.	DEUTSCH	4	562479	562477
C 113	RR MARKER LT	GROTE	2	------	562155
C 114	RR J. BOX CPT DOOR DIR LT LH	GROTE	2	------	562155
C 115					
C 116	ENGINE COMPT. LTS	GROTE	2		563268
C 117	RR JCT BOX MARKER LT	GROTE	2	------	562155
C 117	FR SRV. COMPT. KNEELING UP SOL VALVE	PED WP	2	561761	
C 118	ENGINE COMPT-LAVATORY FAN	PED WP	2	561566	561690
C 119	ENGINE CPT RR DOOR RH LO LAMP	PED WP	6	561606	561607

CONNECTORS CODE

NO	LOCATION	TYPE	CAVITY	#PIN HOUSING	#SOCKET HOUSING
C 120	ENGINE CPT RR DOOR LH LO LAMP	PED WP	6	561606	561607
C 121	BATTERIE CPT. DOOR DIR LT RH	GROTE	2	------	562155
C 122					
C 123	TAG AXLE-UNLOAD TAG RH VALVE	PED WP	2	561566	561690
C 124	ENGINE CPT-ETHER SW	PED WP	2	561566	561690
C 125	ENGINE CPT-B/U ALARM	PED WP	2	561566	561690
C 126	ENGINE CPT-FLUSHING PUMP	PED WP	2	561566	561690
C 127	ENGINE CPT-FUEL FILTER	PED WP	2	561566	561690
C 128	ENGINE CPT-A/C COMPR.CLUTCH	ITT SS	2	561813	561812
C 129					
C 130	ENGINE CPT-UNLOADER	ITT SS	2	561813	561812
C 131	ENGINE CPT-UNLOADER	ITT SS	2	561813	561812
C 132	ENGINE CPT-A/C LO PRESS SW	PED WP	2	561566	561690
C 133	ENGINE CPT-A/C HI PRESS SW	PED WP	2	561566	561690
C 134	FR JCT BOX-LUGGAGE DIODE CON.	AMP MNL	15	561987	561986
C 135	FR JCT BOX-LUGGAGE DIODE CON.	AMP MNL	15	561987	561986
C 136	RR JCT BOX - A/C PANEL DIODE CONN.	AMP MNL	15	561987	561986
C 137	RR JCT BOX-TRANSMITTER	AMP MNL	2	560900	560898
C 138	RR JCT BOX-CONTROL MODULE	AMP HDP	15	------	562012
C 139	RR JCT BOX-LOGIC MODULE	AMP HDP	15	562011	------
C 140	HVAC DASH MODULE THERMOMETER	MOLEX	4		562782
C 141	INSTRUMENT PANEL LH UNLOAD TAG	AMP	2	561248	561247
C 142	LAVATORY DOOR WALL	AMP MNL	2	561248	561247
C 143					
C 144	UNDER LH SEAT-AISLE LTS	AMP MNL	4	560851	560852
C 145	RR JCT BOX CPT-RR SIDE LTS	AMP MNL	9	561670	561669
C 146	ENGINE CPT-MODULATOR VALVE	AMPHENOL	2	------	560412
C 147	BATT & RR J.B.CPT-DOCK.LTS	PED WP	2	561566	561690
C 148					
C 149	CONDENSER CPT-FAN MOTOR	ORDNANCE	3	562555	562001
C 150					
C 151	EVAPORATOR CPT-THERMOSTAT	ITT SS	2	561813	562159
C 152	CONDENSER CPT-FUEL GAUGE	PED WP	4	561610	561611
C 153	EVAPORATOR CPT-AIR AMB. SENS	AMP MNL	2	561248	561247
C 154	EVAPORATOR CPT-FRESH AIR SENS	ITT SS	2	561813	561812
C 155	EVAPORATOR CPT-WATER VALVE	PNEUMAC	4	563204	
C 156	EVAPOR. CPT-BYPASS WATER VAL.	PED WP	2	561566	561690
C 157					
C 158	CONDENSER CPT-A/C LO TEMP.	PED WP	2	561566	561690
C 159	CONDENSER CPT-A/C HI TEMP.	PED WP	2	561566	561690
C 160	FR AXLE-ABS RH SENSOR	WABCO	2	641132	------
C 161	FR AXLE-ABS RH VALVE	WABCO	3	------	641098
C 162	FR AXLE-ABS LH VALVE	WABCO	3	------	641098
C 163	FR AXLE-ABS LH SENSOR	WABCO	2	641132	------
C 164	RR AXLE-ABS LH SENSOR	WABCO	2	641132	------
C 165	RR AXLE-ABS LH VALVE	WABCO	3	------	641098
C 166	RR AXLE-ABS RH VALVE	WABCO	3	------	641098
C 167	RR AXLE-ABS RH SENSOR	DEUTSCH	2	641132	------
C 168	RR AXLE-ABS OPT ATC	PED WP	2	561566	561690
C 169	RR JCT BOX-SPEED SW	AMP HDP	15	------	562012
C 170	FR JCT BOX-FLASHER UNIT	TC	2	------	561940
C 171	LH CONSOLE	AMP CPC	24	561642	561643
C 172					
C 173					
C 174	UNDER DASH RH-HTR MODULE	AMP MNL	9	561670	561669
C 175	UNDER DASH RH-HTR MODULE	AMP MNL	9	561670	561669
C 176	UNDER DASH RH-WIPER PULSE	AMP FF	6	------	561186
C 177	UNDER DASH RH-WIPER MOTOR	AMP FF	6	------	561186
C 178	UNDER DASH RH-LH FAN	TC	2	561030	560997
C 179	UNDER DASH RH-RH FAN	TC	2	561030	560997
C 180	RR JCT BOX-DIODE CONNECTOR	AMP MNL	15	561987	561986
C 181	RR JCT BOX-DIODE CONNECTOR	AMP MNL	15	561987	561986
C 182					
C 183	FR SERVICE CPT-KNEELING PAN.	PED WP	4	561610	561611
C 184	FR SERVICE CPT-KNEELING SW	ITT SS	3	561111	561080
C 185					
C 186					

NO	LOCATION	TYPE	CAVITY	#PIN HOUSING	#SOCKET HOUSING
C 186M	RR JCT BOX CPT.-SPD SIGN. M.TR	PED WP	2	561566	561690
C 186W	RR JCT BOX CPT.-SPD SIGN. WT	PED WP	2	561566	561690
C 187	FR JCT BOX-RPM RESISTOR CON.	AMP MNL	6	561552	561515
C 188					
C 189	ENGINE CPT RR DOOR B/U LT	TRUCK-LITE	2	------	562755
C 190	ENGINE CPT RR DOOR TAIL/ STOP LT	SUPER SEAL	3		562601
C 191	ENGINE CPT RR DOOR RH TAIL/STOP LT	SUPER SEAL	3		562601
C 192	ENGINE CPT RR DOOR DIR. LT	SUPER SEAL	3		562601
C 193					
C 194					
C 195					
C 198	ENGINE CPT RR DOOR LICENCE LT	PED WP	2	562348	562471
C 199					
C 200	RH HAT RACK-FLUORESCENT	AMP MNL	2	561248	561247
C 201	RH HAT RACK-FLUORESCENT	AMP MNL	2	561248	561247
C 202	RH HAT RACK-INDIRECT LIGHTING	MOLEX	2	---------	562758
C 203	RH HAT RACK-INDIRECT LIGHTING	MOLEX	6	---------	562759
C 204	RH HAT RACK-GENERAL LT	AMP MNL	2	560900	560898
C 205	FR SECT.-RH HAT RACK SPEAKER	AMP MNL	9	561661	561662
C 206	RH HAT RACK-READING LT	AMP FF	4	----------	562756
C 207	LH HAT RACK-READING LT	AMP FF	4	----------	562756
C 208	LH HAT RACK-BALLAST	MOLEX	2	----------	562758
C 209	LH HAT RACK HOTESS CHIME	AMP MNL	3	561667	561550
C 210	FR SECT.-LH HAT RACK SPEAKER	AMP MNL	9	561661	561662
C 211	FR ROOF-STORE LH	AMP MNL	2	560900	560898
C 212	FR ROOF-STORE RH	AMP MNL	2	560900	560898
C 213					
C 214	ENGINE CPT J1922				
C 215	TAG AXLE - A.T.C. SYSTEM				
C 216	TAG AXLE - A.T.C. SYSTEM				
C 217	RH DASH PANEL-FRONT CAMERA SW	EATON	8	--------	562763
C 218	RH DASH PANEL-FRONT CAMERA SW	AMP MNL	2	560900	560898
C 219	ENGINE CMPT. – FIRE DETECTOR	DEUTSCH	2	562486	562485
C 220	RR.JCT.BOX-FUEL PRIME PUMP	TC	1	561070	561073
C 221	BATTERY CMPT. FIRE DETECTOR	DEUTSCH	2	562486	562485
C 222	ENGINE CMPT. FIRE DETCTOR	DEUTSCH	2	562486	562485
C 223	ENGINE CMPT. FIRE DETCTOR	DEUTSCH	2	562486	562485
C 224	ENGINE CMPT. -VORAD J1939	DEUTSCH	3	562877	562884
C 225	ENGINE CMPT. -VORAD J1939	DEUTSCH	3	562877	562884
C 226	FR LH UPPER WHEEL CPT-VORAD J1939	DEUTSCH	3	562677	562884
C 227					
C 228					
C 229					
C 230	ENG.CPT.-FUEL PRIME PUMP FEED	DEUTSCH	2	562486	562485
C 231	ENG.CPT.-FUEL PRIME PUMP SW.	PED WP	2	561566	561690
C 232	ENG.CPT.-FUEL PRIME PUMP	PED WP	2	561566	561690
C 233	FR. SERVICE COMPT.	VDO	8		562043
C 234	FR. SERVICE COMPT.	VDO	8		562044
C 235	FR. SERVICE COMPT.	VDO	8		562041
C 236	LUGGAGE COMPARTEMENT	AMP MNL	4	560851	560852
C 237	UNDER DASH LH-JACOB CLUTCH SW	ITT SS	3	561111	561080
C 238	UNDER DASH LH-PASS. REC. DAMPER SW	EATON	8	------	562763
C 239	FR SERVICE CPT-HI BUOY VALVE	PED WP	2	561566	561690
C 240	FR SERVICE CPT-KNEEL PROX SW	PED WP	3	561781	562428
C 241	HEADLAMPS HI BEAM	HELLA	2		562623
C 242	HEADLAMPS LO BEAM	HELLA	2		562623
C 243	FR SERVICE CPT. HEADLAMPS	DEUTCH	3	565131	562789
C 244	FR SERVICE CPT-LH FOG LAMP	DEUTCH	2	562902	562901
C 245	FR SERVICE CPT-RH FOG LAMP	DEUTCH	2	562902	562901
C 246	FR SERVICE CPT. MIRROR	CONXALL	5	563091	563090
C 247	HEADLAMPS MARK & DIR LTS	AMP SUPER S	3		562601
C 248	FR JCT BOX-WIPER PULSE GEN	AMP FF	6	------	561108
C 249					
C 250	LH CONSOL PANEL- LOW BOY	PED	2	561566	561690
C 251	LH DASH PANEL-FAST IDLE SW	EATON	8	------	562763
C 252					
C 253	LH DASH PANEL-ETHER SW	EATON	8	------	562763

CONNECTORS CODE

NO	LOCATION	TYPE	CAVITY	#PIN HOUSING	#SOCKET HOUSING
C 254	INST. PANEL RH-ENTR.DOOR SW.	TORRIX	5	------	562110
C 255	LH DASH PANEL-JACOB & RETARDER SW	EATON	8	------	562763
C 256					
C 257					
C 258	LH SW PANEL-MULTI FUNC. SW	AMP FF	8	561188	------
C 259	LH SW PANEL-MULTI FUNC. SW	AMP FF	6	------	561108
C 260	FR SERVICE CPT-LUG DOOR LCK	PED WP	6	561606	561607
C 261	UNDER DASH RH-DOOR MODULE	AMP MNL	9	561670	561669
C 262	UNDER DASH RH-DOOR MODULE	AMP MNL	4	561551	561668
C 263	UNDER DASH RH-DOOR MODULE	AMP MNL	3	561667	561550
C 264	UNDER DASH RH-DOOR MODULE	AMP MNL	3	561667	561550
C 265	UNDER DASH RH-DOOR MODULE	AMP HDP-20	15	562011	562012
C 266					
C 267	UNDER DASH RH	AMP CPC	24	561642	561643
C 268	UNDER DASH LH-MIRROR	AMP MNL	6	561552	561515
C 269	UNDER DASH RH-MIRROR	AMP MNL	6	561552	561515
C 270	LH MIRROR POST	MOLEX	6	562070	562069
C 271	RH MIRROR POST	MOLEX	6	562070	562069
C 272	LH MIRROR	SPARTAN	6	------	990158
C 273	RH MIRROR	SPARTAN	6	------	990158
C 274	RR. JCT. BOX – SIGNAL ALT. MODULE	AMP MNL	12	561735	561734
C 275	UNDER DASH RH-DOOR MODULE	AMP MNL	9	561670	561669
C 276	UNDER DASH RH-LOCK SOL.VALVE	AMP MNL	2	561248	561247
C 277					
C 278					
C 279 *	FR SERVICE CPT.- STEERING ZF	DEUTCH	2		562486
C 279	UNDER DASH CYLINDER READ SW.	AMP MNL	2	561248	561247
C 280	LH CONSOLE-UNLOAD TAG SW.	NGR	10	------	562763
C 281					
C 282					
C 283					
C 284					
C 285					
C 286	RH SW PANEL-A/C & HEAT	EATON	8	------	562763
C 287	ENGINE COMPT-LTS SW	PED WP	2	561566	561690
C 288	RH SW PANEL-FRESH AIR	EATON	8	------	562763
C 289					
C 290					
C 291					
C 292					
C 293					
C 294					
C 295					
C 296					
C 297	INSTRUMENT PANEL RH -LTS	AMP MNL	2	560900	560898
C 298					
C 299	RH DASH PANEL SW-GALLEY	EATON	8	------	562763
C 300					
C 301					
C 302					
C 303					
C 304					
C 305					
C 306					
C 307					
C 308	LH CONSOLE SW-RHEOSTAT	TC	2	561030	560997
C 309	DDEC ENGINE-ECM POWER CON.	PED MP	5	------	562345
C 310	LH DASH PANEL -LUG. DOOR LCK SW	EATON	8	------	562763
C 311	RH DASH PANEL -HOS & PAS CHIME SW	EATON	8	------	562763
C 312	RH DASH PANEL -READING LTS SW	EATON	8	------	562763
C 313	RH DASH PANEL -GEN & FLUOR LTS SW	EATON	8	------	562763
C 314	LH DASH PANEL-FR DEST. SIGN SW	EATON	8	------	562763
C 315	LH DASH PANEL-LH STORE SW	EATON	8	------	562763
C 316	LH CONSOLE SPARE SWITCH	EATON	8	------	562763
C 317	LH DASH PANEL-RH STORE SW	EATON	8	------	562763
C 318	LH CONSOLE SW-DRV WINDOW LIFT	EATON	8	------	562763
C 319					

NO	LOCATION	TYPE	CAVITY	#PIN HOUSING	#SOCKET HOUSING
C 320	RH DASH PANEL-DRIVER'S LTS SW	EATON	8	------	562763
C 321	READING LTS TEST				
C 322	LH CONSOLE DRV WIND LIFT MOT	PED PO	2	------	561848
C 323	LH CONSOLE CRUISE CTR SW PAN. AMP	CPC	9	561636	561637
C 324					
C 325	LH DASH PANEL-KNEELING SW	EATON	8	------	562763
C 326	ENGINE CMPT.	PED	4	------	561610
C 327	ENGINE CONTROL	DEUTSCH	6	562583	562581
C 328	GALLEY-LAMP	AMP MNL	2	561248	561247
C 329	ENGINE TACHO SIGNAL	PED WP	3	561781	561789
C 330					
C 331	GALLEY MICROWAVE SW	EATON	8	------	562763
C 332					
C 333	GALLEY RH CONTAINER SW	EATON	8	------	562763
C 334	GALLEY LH CONTAINER SW	EATON	8	------	562763
C 335					
C 336					
C 337	INSTR PANEL LH-UP WIPER SW	EATON	8	------	562763
C 338	INSTR PANEL LH-UP DEFROST SW	EATON	8	------	562763
C 339	INSTR PANEL LH-UP WASHER SW	EATON	8	------	562763
C 340	FR JCT. BOX FIRE PIEZO ALARM	AMP MNL	2	560900	560898
C 341	INSTR PANEL LH-HEAT MIRROR SW	EATON	8	------	562763
C 342	ENGINE RR START SW	DEUTSCH	2	562586	562585
C 343	INSTR PANEL LH-HEADLAMP SW	EATON	8	------	562763
C 344	INSTR PANEL LH-HAZARD LT SW	EATON	8	------	562763
C 345	INSTR PANEL LH-FOG LT SW	EATON	8	------	562763
C 346					
C 347	INSTR PANEL LH-DASH LT SW	AMP MNL	2	560900	560898
C 348	INSTR PANEL CENT-RACOR MODULE	MOLEX	6	562070	562067
C 349					
C 350	RH CONSOLE-THERMOMETER	AMP MNL	3	561667	561550
C 351	LH HAT RACK-FLUOR 110V	MOLEX	4	561477	561476
C 352	RH CONSOLE-DRV TEMP SENSOR	BURNDY	4	------	561104
C 353	INSTR PANEL RH-DRV FAN RHEOST	AMP MNL	6	561552	561515
C 354	INSTR PANEL RH-DRV TEMP CTR	AMP MNL	6	561552	561515
C 355	INSTR PANEL RH-FR TEMP CTR	AMP MNL	3	561667	561550
C 356					
C 357	INSTR PANEL RH-WATER TEMP GA	AMP MNL	3	561667	561550
C 358	INSTR PANEL RH-FUEL LEVEL GA	AMP MNL	3	561667	561550
C 359					
C 360					
C 361	FR ROOF-WIPER MOTOR	AMP FF	6	------	561186
C 362	FR ROOF-LAVATORY OCCUPIED LT	AMP MNL	2	561248	561247
C 363	FR ROOF-WATCH YOUR STEP LT	AMP MNL	2	561248	561247
C 364	FR ROOF-DESTINATION SIGN	AMP MNL	3	561667	561550
C 365	FR ROOF-UP WINDSHIELD DEFROST	AMP MNL	3	561667	561550
C 366	RH DASH PANEL-GRN & RED LEDS	AMP MNL	3	560908	562006
C 367	ENGINE COMPT-DIF OIL T SENSOR	PED WP	2	561566	561690
C 368	FR ROOF-DEST. SIGN BALLAST	AMP MNL	3	561667	561550
C 369	FR ROOF-DEST. SIGN OPER. SW	TORRIX	5	------	562110
C 370	FR ROOF-DEST. SIGN FLUOR.	AMP MNL	2	560900	560898
C 371	FR ROOF-DEST. SIGN FLUOR.	AMP MNL	2	560900	560898
C 372	FR ROOF-DEST. SIGN SPEED SW	MOLEX	4	561477	561476
C 373	FR ROOF-NO SMOKING LT	AMP MNL	2	561248	561247
C 374	LH SWITCH PANEL	AMP MNL	6	561552	561515
C 375					
C 376					
C 377	LH DASH PANEL-STOP ENG.OVERIDE SW	EATON	8	------	562763
C 378					
C 379					
C 380	LH CONSOLE-DDR CONNECTOR	DEUTSCH	6	562360	------
C 381					
C 382					
C 383					
C 384					
C 385	EVAPOTATOR COMP WATER PUMP	PED WP	2	561566	561690
C 386	LH DASH PANEL-WCL POWER SYSTEM SW	EATON	8	------	562763

CONNECTORS CODE

NO	LOCATION	TYPE	CAVITY	#PIN HOUSING	#SOCKET HOUSING
C 387	RR JCT BOX (WCL)	AMP MNL	9	561661	561662
C 388	RR JCT BOX (WCL)	AMP MNL	12	561735	561734
C 389	WCL REAR DOOR	MOLEX	4	561477	561476
C 390	LAVATORY WALL-WCL REMOTE CTR	EATON	8	------	562763
C 391	LAVATORY WALL-WCL LAMP	EATON	8	------	562763
C 392	LAVATORY WALL-WCL SW. LT.	EATON	2	------	561835
C 393	LAVATORY WALL-WCL REMOTE SYS.	AMP CPC	4	561686	561687
C 394	UNDER INSTR. PANEL- B/U MONITOR	AMP MNL	4	560851	560852
C 395	DRIVER'S COMPT. - B/U MONITOR	AMP	5	------	------
C 396	FR SECT. LH HAT RACK-SPEAKER	MOLEX	4	562507	562503
C 397	ENGINE COMPT. CRADLE ACC.	DEUTSCH	40	562281	562284
C 398					
C 399	ENGINE COMPT. – PRE-EXITATION ALT.	PED WP	2	561566	561690
C 400	ENGINE COMPT. BLOCK HEATER	PED MP	3	561781	561782
C 401					
C 402					
C 403	GALLEY FRIGO NORCOLD	AMP MNL	2	561248	561247
C 404	GALLEY LAMP	AMP MNL	2	561248	561247
C 405	LAST LUGGAGE COMP.- INVERTER SIGNAL	AMP MNL	2	561248	561247
C 406	FR JCT BOX COMPT.-ABS	AMP MNL	2	560900	560898
C 407					
C 408					
C 409	ENGINE CPT -LOW COOL. LEVEL	PED MP	2	------	562350
C 410	FR JCT BOX-DIODE CONNECTOR	AMP MNL	15	561987	561986
C 411	FR JCT BOX-DIODE CONNECTOR	AMP MNL	15	561987	561986
C 412	LH DASH PANEL-MASTER SWITCH SW	EATON	8	------	562763
C 413	ENG CPT-A/C HI UNLOAD PRS SW	PED WP	2	561566	561690
C 414					
C 415	RR JCT BOX – ENGINE SIGNAL	DEUTSCH	24	562280	562283
C 416	ENGINE CRADLE-ENGINE SIGNAL	FCI	10	563207	------
C 417	FRONT JCT BOX-DIODES	AMP MNL	15	561987	561986
C 418	LH DASH PANEL-HTR WINDSH.SW	EATON	8	------	562763
C 419	FR JCT BOX-RETARDER OR JACOB	AMP MNL	3	561667	561550
C 420					
C 421					
C 422					
C 423					
C 424	UNDER INSTRUMENT PANEL CENTER	AMP MNL	3	561667	561550
C 425	FR JCT BOX-DIODES	AMP MNL	15	561987	561986
C 426	ENGINE COMPT. CLUTCH CTR FAN	PED WP	3	561781	561782
C 427	PRO-HEAT	PED-WP	2	561566	561680
C 428	PRO-HEAT	PED WP	6	561606	561607
C 429	FR JCT BOX COMPT.	AMP MNL	6	561552	561515
C 430	LH CONSOLE-TIMER	AMP FF	8	561188	562363
C 431	LH CONSOLE-PRE HEAT.	TAB AMP	1	561540	561539
C 432	ENGINE CPT.-PROX. SW. DOOR AJAR	PED-WP	2	561566	561680
C 433	FR SERVICE CPT. KNEEL. PRESS. SW	PED WP	2	561566	561690
C 434	FRONT JCT. BOX-DIODES	AMP MNL	15	561987	561986
C 435	FR SERVICE CPT.(RH) KNEEL. PIEZO	AMP MNL	2	560900	560898
C 436	RH HAT RACK-WCL CENTER ROOF ACC	AMP CPC	16	561639	561640
C 437	RH HAT RACK-WCL FR & RR SECT.	AMP CPC	24	561642	561643
C 438	EVAP CMPT- A/C CONTROL	AMP MNL	2	561248	561247
C 439	EVAP CMPT- A/C CONTROL	AMP MNL	2	561248	561247
C 440	EVAP CMPT- A/C CONTROL	DEUTSCH	4	562479	562477
C 441	FR JCT BOX- DIODES	AMP MNL	15	561987	561986
C 442					
C 443					
C 444					
C 445					
C 446					
C 447					
C 448					
C 449					
C 450	SOUND SYS. JCT. PANEL	MOLEX	4	562507	562503
C 451	WIRELESS MICRO-FIRST CPT BAG	MOLEX	2	562550	562549
C 452	UNDER DASH INSTR. PANEL	MOLEX	2	562550	562549
C 453	SOUND SYS. JCT.PANEL-VCP	PED WP	2	561566	561680

NO	LOCATION	TYPE	CAVITY	#PIN HOUSING	#SOCKET HOUSING
C 454	SOUND SYS.JCT.PAN.-FILT. VCP	PED WP	2	561566	561680
C 455	WIRELESS MICRO-LH HAT-RACK	MOLEX	6	------	562464
C 456	WORLD TRANSM.-RETARDER ACCUM.	PED MP	2	------	562427
C 457	WORLD TRANSM.-MAIN CONNECTOR	DEUTSCH	31	562572	562536
C 458	WORLD TRANSM.-TURBINE SP.SENS	PED MP	2	------	562426
C 459	WORLD TRANSM.-ENGINE SP.SENS.	PED MP	2	------	562426
C 460	WORLD TRANSM.-SPEED SENSOR	ITT	2	------	562541
C 461	WORLD TRANSM.-RETARDER TEMP.	PED MP	2	561566	561680
C 462	WORLD TRANSM.-RETARD SOL."K"	PED MP	2	------	562426
C 463	WORLD TRANSM.-SENSOR CONN.	DEUTSCH	16	562570	562571
C 464	RR JCT BOX-DDR CONNECTOR	DEUTSCH	6	------	562360
C 465	LH CONSOLE-SHIFTER SELECTOR	PED	20	------	562825
C 466	FR SERVICE CPT.-RESIS. MOD.	PED WP	3	------	562428
C 467	FR SERVICE CPT.-RESIS. MOD.	PED WP	3	------	562428
C 468			8		
C 469					
C 470	FR LH UPPER WHELL CPT-SILENT 1000	AMP MNL	2	561248	561247
C 471	FR LH UPPER WHELL CPT-SILENT 1000	AMP MNL	2	561248	561247
C 472	FR LH UPPER WHELL CPT-SILENT 1000	PED WP	2	561566	561690
C 473	FR LH UPPER WHELL CPT-SILENT 1000	AMP MNL	3	561667	561550
C 474	DRIVER CPT.-TEMP. SENSOR	AMP MNL	2	561247	561248
C 475	RR JCT BOX-SPEED SIGN CONNECTOR	DEUTSCH	2	562486	562485
C 476					
C 477					
C 478	ELECTRONIC DESTINATION SIGN	AMP CPC	9	561636	561637
C 479	HVAC MODULE	MOLEX	3		562783
C 480	UNDER DASH LH-DR. FAN SPEED CTR. MOD	PED	4	561889	561890
C 481	UNDER DASH LH-DR. FAN SPEED CTR. MOD	PED	3	561781	561782
C 482					
C 483	FR SERVICE CPT. (NOT USED)	PED PC	2	------	562237
C 484	UNDER DASH LH.-FOOT DAMPER MOTOR	PED PC	2	------	562076
C 485	UNDER DASH LH.-DASH & DEFR. DAM.MOT.	AMP MNL	3	561667	561550
C 486					
C 487	S.S.PANEL – AUDIO IN AMPLI	MOLEX	4	------	563071
C 488	S.S.PANEL – AMPLI SIGNAL	MOLEX	8	------	562465
C 489	S.S.PANEL – SPEAKER OUTLET	MOLEX	6	------	562464
C 490					
C 491					
C 492					
C 493					
C 494					
C 495					
C 496					
C 497					
C 498					
C 499					
C 500	FR LH UPPER WHELL CPT -PRODRIVER	MOLEX	6	562070	562069
C 501	FR LH UPPER WHELL CPT -PRODRIVER	PED MP	7	562433	------
C 502	LH DASH PANEL-PRE HEATER SW.	EATON	8	------	562763
C 503	LH CONSOLE-PRE HEATER SW.	EATON	2	------	561837
C 504	LH CONSOLE WEBASTO TIMER	AMP	8	------	562852
C 505	LH CONSOLE ESPAR TIMER	AMP	9	------	562681
C 506	FR JCT BOX CPT. DIGITAL CLOCK	AMP	4	561685	561687
C 507	FR SECT. LH HAT-RACK DIG. CLOCK	MOLEX	4	561477	561476
C 508	RR JCT BOX-FAN CLUTCH RETARDER	AMP MNL	6	561552	561515
C 509	FR LH UPPER WHELL CPT -DATA LOGGER	PED MP	16	------	562530
C 510	FR LH UPPER WHELL CPT -DATA LOGGER	DEUTSCH	9	562531	------
C 511	FR LH UPPER WHELL CPT -DATA LOGGER	PED MP	4	562532	------
C 512	FR LH UPPER WHELL CPT -DATA LOGGER	PED MP	10	562533	------
C 513	FR LH UPPER WHELL CPT -DATA LOGGER	AMP MNL	3	561667	561550
C 514	FR LH UPPER WHELL CPT -DATA LOGGER	PED MP	6	562433	562417
C 515	FR JCT BOX CPT.-INTERCOM	MOLEX	4	561477	561476
C 516	FR JCT BOX CPT.-INTERCOM	MOLEX	6	562070	562069
C 517	LAVATORY WALL-INTERCOM	MOLEX	6	562070	562069
C 519	UNDER DASH RH-SEDAN DOOR	HUMPHREY	2	------	562580
C 520	UNDER DASH RH-SEDAN DOOR	HUMPHREY	2	------	641385
C 521	UNDER DASH RH-SEDAN DOOR	HUMPHREY	2	------	641385

CONNECTORS CODE

NO	LOCATION	TYPE	CAVITY	#PIN HOUSING	#SOCKET HOUSING
C 522					
C 523	FR JCT BOX-FUSE BLOCK	PED	8	562647	562646
C 524	FR JCT BOX-FUSE BLOCK	PED	8	562647	562646
C 525	FR JCT BOX-FUSE BLOCK	PED	8	562647	562646
C 526	FR JCT BOX-FUSE BLOCK	PED	8	562647	562646
C 527	FR JCT BOX-FUSE BLOCK	PED	8	562647	562646
C 528	FR JCT BOX-FUSE BLOCK	PED	8	562647	562646
C 529	FR JCT BOX-12V OUTLET	AMP MNL	2	561247	561248
C 530	RR JCT BOX-FUSE BLOCK	PED	8	562647	562646
C 531	RR JCT BOX-FUSE BLOCK	PED	8	562647	562646
C 532	RR JCT BOX-FUSE BLOCK	PED	8	562647	562646
C 533	RR JCT BOX-FUSE BLOCK	PED	8	562647	562646
C 534	RR JCT BOX-FUSE BLOCK	PED	8	562647	562646
C 535	RR JCT BOX-FIRE MODULE DETECT.	AMP MNL	3	561667	561550
C 536	UNDER DASH RH-DRIVER'S HTR TEMP. CTR	AMP MNL	6	561552	561515
C 537	BATT. CPT.-A/C PRESS. SIGN. RLY	AMP MNL	2	561248	561247
C 538	FR SERVICE CPT.-OUTSIDE TEMP. SENSOR	AMP MNL	2	561248	561247
C 539	HVAC DASH MODULE OUTPUT CON	MOLEX	24		562780
C 540	HVAC DASH MODULE INPUT CON	MOLEX	22		562781
C 541	SOUND SYS. JCT PANEL-AUDIO SEAT SYS.	PED WP	2	561566	561690
C 542	LH HAT RACK-AUDIO SEAT SYSTEM	AMP MNL	3	561667	561550
C 543					
C 544	SOUND SYS JCT PANEL-AUDIO SEAT SYS.	PED WP	3	561781	562428
C 545	LH HAT RACK-AUDIO SEAT SYSTEM	AMP MNL	3	561667	561550
C 546	WIRELESS MIC. CHARGING SYSTEM	MOLEX	2	--------	563025
C 547	RH DASH PANEL-ACCESSORIES	AMP CPC	37	561645	561646
C 548	LH DASH PANEL-T.T. LT. TEST SW.	EATON	8	------	562763
C 549	LH DASH PANEL-FAN CLUTCH OVERR. SW	EATON	8	------	562763
C 550	LAST LUGG. CPT. -WCL RICON	AMP CPC	16	561694	561695
C 551	LAST LUGG. CPT. -WCL RICON	AMP CPC	16	561694	561695
C 552	LAST LUGG. CPT. -WCL RICON	AMP CPC	9	561636	561637
C 553	UNDER DASH R.H. - CONTROL. HEAD	MOLEX	16	---------	562559
C 554	UNDER DASH R.H. - CONTROL. HEAD	MOLEX	16	---------	562559
C 555	UNDER DASH R.H. - CONTROL. HEAD	MOLEX	16	---------	562559
C 556	UNDER DASH R.H. - RADIO ACC.	MOLEX	2	562550	562549
C 557	UNDER DASH R.H. - RADIO ACC.	MOLEX	9	562556	562555
C 558	UNDER DASH R.H. - RADIO ACC.	MOLEX	4	562507	562503
C 559	SOUND SYS. JCT. PANEL – FILTER AMPLI	PED WP	2	561566	561690
C 560	SOUND SYS. JCT. PANEL – POWER AMPLI	MOLEX	4	562507	562503
C 561	L.H. HAT RACK - WIRELESS MICRO	MOLEX	8		562465
C 562	L.H. HAT RACK - VCP	MOLEX	12	562556	563070
C 563	L.H MODESTY PANEL - DRIVERS SPK.	MOLEX	4	562507	562503
C 564	L.H MODESTY PANEL - MICRO	MOLEX	4	562507	562503
C 565	R.H MODESTY PANEL - MICRO	MOLEX	4	562507	562503
C 566	L.H. CONSOLE - BOOM MICRO	MOLEX	4	562507	562503
C 567	L.H. CONSOLE - DRIVERS MICRO	MOLEX	4	562507	562503
C 568	SOUND SYS. JCT. PANEL - PASS. SPK	CINCH	4	562553	562552
C 569	SOUND SYS. JCT. PANEL - POWER AMPLI.	MOLEX	9	562556	562555
C 570	UNDER DASH PANEL TTLT	MOLEX	6		562464
C 571	UNDER DASH PANEL TTLT	MOLEX	20		562778
C 572	UNDER DASH PANEL TTLT	MOLEX	18		562779
C 573	UNDER DASH PANEL TTLT	MOLEX	8		562465
C 574	HAT -RACK FLUOR. INDIRECT LIGHTING	MOLEX	6	----------	562759
C 575	HAT -RACK FLUOR. INSTATION LIGHT	MOLEX	4	562507	562503
C 576	HAT -RACK FLUOR. INDIRECT LIGHTING	AMP MNL	3	561667	561550
C 577	HAT -RACK FLUOR. INDIRECT LIGHTING	AMP MNL	3	561667	561550
C 578	HAT -RACK FLUOR. INSTATION LIGHT	MOLEX	4	562507	562503
C 579	L.H HAT RACK – VCP POWER	MOLEX	4		563071
C 580	RH DASH PANEL-HAT RACK FAN SW	EATON	8	--------	562763
C 581					
C 582	FRONT SERVICE CMPT. - WINDOWS AJAR	PED WP	2	561566	561690
C 583	L.H. DASH PANEL - MASTER KEY	DEUTSCH	2	562486	562485
C 584	FRONT SERVICE CMPT. - AIR HORH	HUMPHREY	3	--------	641385
C 585					
C 586					
C 587	LH PARCEL RACK DVD UNIT	MOLEX	4	563040	563071
C 588	FRONT SERVICE CPT. CENTER SOUND SYS.	AMP. CPC	37	561645	561646

NO	LOCATION	TYPE	CAVITY	#PIN HOUSING	#SOCKET HOUSING
C 589	UNDER DASH - L.H. MIRROR	AMP MNL	9	561670	561669
C 590	UNDER DASH - R.H. MIRROR	AMP MNL	9	561670	561669
C 591	L.H.CONSOLE - MIRROR L.H.	EURAMTEC	8	--------	562799
C 592	L.H.CONSOLE - MIRROR R.H.	EURAMTEC	8	--------	562799
C 593	BATTERY CMPT. - CHARGER	PED WP	3	561781	561782
C 594	FRONT ROOF - DRIVERS LIGHT	LEEKRAFT		---------	562803
C 595	DASH CENTER MODULE - OPEN DOOR	MOLEX	4	561477	561476
C 596	DASH CENTER MODULE - CLOSE DOOR	MOLEX	4	561477	561476
C 597	L.H. DASH PANEL - DISPLAY SET SW.	MOLEX	5		562812
C 598	L.H. DASH PANEL - DISPLAY SET SW.	MOLEX	5		562812
C 599					
C 600	ENGINE CPT.-A/C LOW PRESS SW. UNLOAD	PED	2	562348	562471
C 601	L.H. ROOF - WINDOW AJAR	AMP MNL	2	561248	561247
C 602	L.H. ROOF - WINDOW AJAR	MOLEX	4	561477	561476
C 603	R.H. ROOF - WINDOW AJAR	AMP MNL	2	561248	561247
C 604	LH PARCEL RACK DVD VIDEO STABILIZER	SWITCHCRAFT	1	563074	
C 605	HAT RACK - MOTOR FAN	PED	2	560997	561030
C 606	HAT RACK - MOTOR FAN	PED	2	560997	561030
C 607					
C 608	FRONT SERVICE CMPT. SPEED SIGNAL	PED WP	2	561566	561690
C 609	LAVATORY - NIGHT LIGHT				
C 610					
C 611	HAT RACK READING LTS RICON	MOLEX	6	562558	562557
C 612	HAT -RACK FLUOR. INSTATION LTS RICON	MOLEX	4	562507	562503
C 613	HAT -RACK INDIRECT LTS RICON	AMP MNL	3	561667	561550
C 614	HAT -RACK INDIRECT LTS RICON	AMP MNL	3	561667	561550
C 615	LH PARCEL RACK DVD SING ALONG ADAPT.	MOLEX	2	562550	562549
C 616					
C 701	ZF TRANSMISSION ECU	KOSTAL	20		
C 702	SHIFT SELECTOR – LH CONSOLE	AMP	14		563338
C 712	NEUTRAL SWITCH ON ZF TRANSM. (TOP)	AMP	4		563340
C 714	OUTPUT SENSOR ON ZF TRANSM. (BOTTOM)	AMP	4		563340
C 717	BATT. CPT - MAIN CONNECTOR	AMP CPC	22	561642	561643
C 720	ENGINE COMPT – BLKHD CONNECTOR	DEUTSCH	31	563359	563358
C 721	LH CONSOLE – ZF TESTMAN DIAGNOSTIC	AMP MNL	6	563356	
C 723	ENGINE COMPT – FOR TRANSM.	DEUTSCH	3		562884
C 736	ENGINE COMPT – ZMTEC MODULE	PACKARD	30	563053	
C 740	DRIVE AXLE – EASY START SOL VALVE	LEONI	2	--	641949
C 742	BATT. CPT – FUSE BLOCK	AMP	8	562446	
C 745	FR SERV.COMPT – THROTTLE POS. SENSOR	PED WP	3	561781	
C 760	FR SERV. COMPT – TO J1939	DEUTSCH	3		
C 761	FR SERV. COMPT – TO J1939	DEUTSCH	3		562884
C 762	ENGINE COMPT – TO J1939	DEUTSCH	3		562884
C 763	ENGINE COMPT – TO J1939	DEUTSCH	3		562884
C 764	ENGINE COMPT – TO J1939	DEUTSCH	3		562884
C 765	ENGINE COMPT – TO J1939	DEUTSCH	3		562884
C 766	ENGINE COMPT – TO J1939	DEUTSCH	3		562884
C X	CLUSTER	JAE	22		562766
C Y	CLUSTER	JAE	30		562767
L X	CLUSTER	JAE	22		562764
L					
R					

CONNECTORS CODE

NO	LOCATION	TYPE	CAVITY	#PIN HOUSING	#SOCKET HOUSING
AA1	BEHIND DASH - SONALERT	BOSCH	5		561183
AA2	BEHIND DASH - SONALERT	BOSCH	5		561183
C X1	FR SERVICE COMPT- ECU ABS	AMP	15		563200
C X2	FR SERVICE COMPT- ECU ABS	AMP	18		563201
C RH	DDEC ENGINE- RELATIVE HUMIDITY SENS.	FCI	4		563277
C RXTX	HVAC DASN MODULE COMMUNICATION	MOLEX	3	563206	562873
C S	RR JCT BOX ECU WORLD TR.	PED	32		562817
C T	RR JCT BOX ECU WORLD TR.	PED	32		562824
C V	RR JCT BOX ECU WORLD TR.	PED	32		562823
		AMP CPC	9	561636	561637
C WX1	ENGINE CPT-WEBASTO PRE-HEAT WATER	AMP SEALED	7		563135
C WX3	ENGINE CPT-WEBASTO PRE-HEAT WATER	AMP SEALED	7	563136	
C Y	CLUSTER	JAE	30	---	562765
C 1	FR JCT BOX COMPARTMENT	AMP CPC	14	561585	561584
C 2	FR JCT BOX COMPARTMENT	AMP CPC	16	561639	561640
C 3	FR JCT BOX COMPARTMENT	AMP CPC	24	561641	561643
C 4	FR JCT BOX COMPARTMENT	AMP CPC	37	561644	561646
C 5	FR SERVICE COMPT.-UNDERNEATH	AMP CPC	37	561644	561646
C 6	FR SERVICE COMPT.-UNDERNEATH	AMP CPC	16	561639	561640
C 7					
C 8	FR SERVICE COMPT.-UNDERNEATH	AMP CPC	24	561641	561643
C 9	FR SERVICE COMPT.-UNDERNEATH	AMP CPC	24	561641	561643
C 10	LUGGAGE COMPT. WATER BOOSTER PUMP	PED	2	562348	562471
C 11	FR SERVICE COMPARTMENT	AMP CPC	37	561644	561646
C 12	FR SERVICE COMPARTMENT	AMP CPC	16	561639	561640
C 13	LH CONSOLE-CTR MIRROR	AMP MNL	6	561552	561515
C 14	UNDER DASH-LH MIRROR	AMP MNL	9	561661	561662
C 15	A/C CLUTCH	PED WP	2	561566	561690
C 16	LH CONSOLE SW-CRUISE ON OFF	EATON	10	------	562763
C 17	LH CONSOLE SW-CRUISE RESUME	EATON	10	------	562763
C 18	LH CONSOLE SW-CRUISE SET	EATON	10	------	562763
C 19	LH CONSOLE DECEL SW	EATON	10	------	562763
C 20	RR JCT BOX	DEUTSCH	70	562282	562285
C 21	RR JCT BOX	DEUTSCH	24	562280	562283
C 22	RR JCT BOX - EATON TRANSM.	AMP MNL	6	561552	561515
C 23	DDEC ENGINE-ECM J1939	PED MP	6	-------	561962
C 24	DDEC ENGINE-12Vi FOR OPTION	PED WP	1	-------	561577
C 25					
C 26	HYD & MAN TRANSM.-NEUT.& B/U	PED WP	4	561610	561611
C 27	HYD & MAN TRANSM.-SPEED SENS.	PED WP	2	561566	561690
C 28	EATON TRANSMISSION	DEUTCH	3	562877	562884
C 29	EATON TRANSMISSION	PED MP	6	562878	------
C 30	RR JCT BOX - ECU EATON TRANSM.	PED MP	32	------	562866
C 31	RR JCT BOX - ECU EATON TRANSM.	PED MP	24	------	562865
C 32	DDEC ENGINE-ECM	PED	30	------	561600
C 33	RR JCT BOX - EATON TRANSM.	DEUTCH	9	562531	------
C 34	RH. CONSOLE - EATON TRANSM. SHIFTER	PED MP	3	------	562871
C 35	RR JCT BOX	DEUTCH	40	562281	562284
C 36	RH. CONSOLE - EATON TRANSM. SHIFTER	PED MP	24	------	562874
C 37	RR SECTION-LH HAT RACK	MOLEX	6	562558	562557
C 38	RR SECTION-RH HAT RACK	MOLEX	6	562558	562557
C 39	LH CONSOLE - EATON TRANSM. DISPLAY	AMP MNL	4	561551	561668
C 40	RR JCT BOX - EATON TRANSM. J1939	DEUTCH	3	562877	562884
C 41	LAVATORY ROOF LIGHT	LEECRAFT	2	-----	562803
C 42	LAVATORY BACK WALL-WTR TANK	AMP MNL	2	560900	560898
C 43	LAVATORY BACK WALL-ACCES.	AMP MNL	9	561661	561662
C 44	EATON TRANSM. J1939	DEUTCH	3	562877	562884
C 45	FR JCT BOX COMPARTMENT	AMP CPC	24	561642	561643
C 46	EATON TRANSM. J1939	DEUTCH	3	562877	562884
C 47	FR SERVICE COMPARTMENT	AMP CPC	16	561694	561695
C 48	FR. SERVICE CMPT.PRESS SW PARKBREAK	DEUTCH	4	562479	562477
C 49	BATTERIE COMPT.-LT	AMP MNL	2	561248	561247
C 50	FR SERVICE COMPT.-LOW BUOY	PED WP	1	561605	561577
C 51					
C 52	RR JCT BOX	AMP CPC	24	561642	561643
C 53	SPARE TIRE COMPT ENTRANCE STEP LIGHT	DEUTCH	2	562486	562485
C 54	SPARE TIRE COMPT ENTRANCE STEP LIGHT	DEUTCH	2	562486	562485

NO	LOCATION	TYPE	CAVITY	#PIN HOUSING	#SOCKET HOUSING
C 55	RH SWITCH PANEL	AMP CPC	9	561636	561637
C 56	HAT RACK- MOTOR FAN	MOLEX	6	562558	562557
C 57	HAT RACK- MOTOR FAN	MOLEX	6	562558	562557
C 58	RR JCT BOX AC PANEL	DEUTSCH	24	562280	562283
C 59	RR JCT BOX AC PANEL	AMP CPC	14	561584	561583
C 60	RR JCT BOX COMPT.-LT	AMP MNL	2	561248	561247
C 61	LUGGAGE COMPARTMENT LTS	AMP MNL	2	561248	561247
C 62	LUGGAGE COMPARTMENT LTS	AMP MNL	2	561248	561247
C 63	LUGGAGE COMPARTMENT LTS	AMP MNL	2	561248	561247
C 64	LUGGAGE COMPARTMENT LTS	AMP MNL	2	561248	561247
C 65	LUGGAGE COMPARTMENT LTS	AMP MNL	2	561248	561247
C 66	LUGGAGE COMPARTMENT LTS	AMP MNL	2	561248	561247
C 67	LUGGAGE COMPARTMENT LTS	AMP MNL	2	561248	561247
C 68	LUGGAGE COMPARTMENT LTS	AMP MNL	2	561248	561247
C 69	RR AXLE ACC-INSIDE PVC END	PED WP	6	561568	561578
C 70	LH CONSOLE	AMP CPC	16	561642	561643
C 71	FR JCT BOX COMPARTMENT	AMP CPC	37	561645	561646
C 72	FR JCT BOX COMPARTMENT	AMP CPC	24	561642	561643
C 73	DASH CENTER PANEL	AMP CPC	16	561639	561640
C 74	FR JCT BOX COMPARTMENT	AMP CPC	37	561645	561646
C 75	SERV CPT. RXT. ENT. DOOR SW	DEUTSCH	4	562479	562477
C 76	LUGGAGE COMPT.-AIR RET.SENS.	AMP MNL	2	561248	561247
C 77	LUGGAGE COMPT.-AIR RET.SENS.	AMP MNL	2	561248	561247
C 78					
C 79					
C 80	LUGGAGE COMPT.-AIR RET.SENS.	AMP MNL	2	561248	561247
C 81	PASSENGER COMPT.-AISLE LTS	AMP MNL	2	560900	560898
C 82	ENTRANCE DOOR	MOLEX	6	562070	562069
C 83	ENTRANCE DOOR-PROIMITY SW	MOLEX	4	561477	561476
C 84	ENTRANCE DOOR-PRESSURE SW	PED WP	2	561566	561690
C 85	UNDER INSTRUMENT PANEL LH	AMP MTA-100	------	562248	------
C 86					
C 87	RR END ROOF	AMP CPC	9	561636	561637
C 88					
C 89	RR END ROOF-B/U NONITOR	AMP CPC	4	561582	561581
C 90	RR JCT BOX	AMP CPC	15	561987	561986
C 91	RR JCT BOX	AMP CPC	37	561714	561713
C 92	FR LH UPPER WHELL CPT-ABS	AMP CPC	9	561635	561637
C 93	FR LH UPPER WHELL CPT-ABS		35	------	641094
C 94	RH CONSOLE ENTRANCE STEP LIGHT	DEUTCH	2	562486	562485
C 95	CONDENSOR CPT - LIQ. SOL. VALVE	PED WP	2	561566	561690
C 96	FR AXLE ACCESSORIES	AMP CPC	14	561585	561585
C 97	RR AXLE ACC-INSIDE PVC END	PED WP	6	561568	561578
C 98	FR SERVICE COMPT-EL.FT.PEDAL	PED WP	3	561782	561781
C 99	FR SERVICE COMPT LTS	AMP MNL	2	561248	561247
C 100	LH CONSOLE – 120 VOLTS SWITCH	EATON	8	------	562763
C 101	FR SERVICE COMPT-ELEC. HORNS	PED WP	2	561566	561690
C 102	FR SERV & SIDE CPT-FLASH. LH	GROTE	2	------	562155
C 103	FR SERV & SIDE CPT-MARKERS	GROTE	2	------	562155
C 104	LAVATORY TRAP-FLUSH PUMP SW.	DEUTSCH	4	562479	562477
C 104	FR SERV & SIDE CPT-FLASH. RH	GROTE	2	------	562155
C 105	FR SERVICE COMPT-LIQ.S.VALVE	PED WP	2	561566	561690
C 106	FR SERVICE COMPT-WATER VALVE	PED WP	2	561566	561690
C 107					
C 108	FR SERVICE COMPT-KNEEL.SYS	PED WP	2	561566	561690
C 109	FR SERVICE COMPT-KNEEL.SYS	PED WP	2	561566	561690
C 110	FR SERVICE COMPT-KNEEL.SYS	PED WP	2	561566	561690
C 111	EVAPORATOR COMPT-DAMPER	DEUTSCH	2	562486	562485
C 112	LAVATORY BACK WALL-FLUSH PUMP SW.	DEUTSCH	4	562479	562477
C 113	RR MARKER LT	GROTE	2	------	562155
C 114	RR J. BOX CPT DOOR DIR LT LH	GROTE	2	------	562155
C 115					
C 116	ENGINE COMPT. LTS	GROTE	2		563268
C 117	RR JCT BOX MARKER LT	GROTE	2	------	562155
C 117	FR SRV. COMPT. KNEELING UP SOL VALVE	PED WP	2	561761	
C 118	ENGINE COMPT-LAVATORY FAN	PED WP	2	561566	561690
C 119	ENGINE CPT RR DOOR RH LO LAMP	PED WP	6	561606	561607

CONNECTORS CODE

NO	LOCATION	TYPE	CAVITY	#PIN HOUSING	#SOCKET HOUSING
C 120	ENGINE CPT RR DOOR LH LO LAMP	PED WP	6	561606	561607
C 121	BATTERIE CPT. DOOR DIR LT RH	GROTE	2	------	562155
C 122					
C 123	TAG AXLE-UNLOAD TAG RH VALVE	PED WP	2	561566	561690
C 124	ENGINE CPT-ETHER SW	PED WP	2	561566	561690
C 125	ENGINE CPT-B/U ALARM	PED WP	2	561566	561690
C 126	ENGINE CPT-FLUSHING PUMP	PED WP	2	561566	561690
C 127	ENGINE CPT-FUEL FILTER	PED WP	2	561566	561690
C 128	ENGINE CPT-A/C COMPR.CLUTCH	ITT SS	2	561813	561812
C 129					
C 130	ENGINE CPT-UNLOADER	ITT SS	2	561813	561812
C 131	ENGINE CPT-UNLOADER	ITT SS	2	561813	561812
C 132	ENGINE CPT-A/C LO PRESS SW	PED WP	2	561566	561690
C 133	ENGINE CPT-A/C HI PRESS SW	PED WP	2	561566	561690
C 134	FR JCT BOX-LUGGAGE DIODE CON.	AMP MNL	15	561987	561986
C 135	FR JCT BOX-LUGGAGE DIODE CON.	AMP MNL	15	561987	561986
C 136	RR JCT BOX - A/C PANEL DIODE CONN.	AMP MNL	15	561987	561986
C 137	RR JCT BOX-TRANSMITTER	AMP MNL	2	560900	560898
C 138	RR JCT BOX-CONTROL MODULE	AMP HDP	15	------	562012
C 139	RR JCT BOX-LOGIC MODULE	AMP HDP	15	562011	------
C 140	HVAC DASH MODULE THERMOMETER	MOLEX	4		562782
C 141	INSTRUMENT PANEL LH UNLOAD TAG	AMP	2	561248	561247
C 142	LAVATORY DOOR WALL	AMP MNL	2	561248	561247
C 143					
C 144	UNDER LH SEAT-AISLE LTS	AMP MNL	4	560851	560852
C 145	RR JCT BOX CPT-RR SIDE LTS	AMP MNL	9	561670	561669
C 146	ENGINE CPT-MODULATOR VALVE	AMPHENOL	2	------	560412
C 147	BATT & RR J.B.CPT-DOCK.LTS	PED WP	2	561566	561690
C 148					
C 149	CONDENSER CPT-FAN MOTOR	ORDNANCE	3	562555	562001
C 150					
C 151	EVAPORATOR CPT-THERMOSTAT	ITT SS	2	561813	562159
C 152	CONDENSER CPT-FUEL GAUGE	PED WP	4	561610	561611
C 153	EVAPORATOR CPT-AIR AMB. SENS	AMP MNL	2	561248	561247
C 154	EVAPORATOR CPT-FRESH AIR SENS	ITT SS	2	561813	561812
C 155	EVAPORATOR CPT-WATER VALVE	PNEUMAC	4	563204	
C 156	EVAPOR. CPT-BYPASS WATER VAL.	PED WP	2	561566	561690
C 157					
C 158	CONDENSER CPT-A/C LO TEMP.	PED WP	2	561566	561690
C 159	CONDENSER CPT-A/C HI TEMP.	PED WP	2	561566	561690
C 160	FR AXLE-ABS RH SENSOR	WABCO	2	641132	------
C 161	FR AXLE-ABS RH VALVE	WABCO	3	------	641098
C 162	FR AXLE-ABS LH VALVE	WABCO	3	------	641098
C 163	FR AXLE-ABS LH SENSOR	WABCO	2	641132	------
C 164	RR AXLE-ABS LH SENSOR	WABCO	2	641132	------
C 165	RR AXLE-ABS LH VALVE	WABCO	3	------	641098
C 166	RR AXLE-ABS RH VALVE	WABCO	3	------	641098
C 167	RR AXLE-ABS RH SENSOR	DEUTSCH	2	641132	------
C 168	RR AXLE-ABS OPT ATC	PED WP	2	561566	561690
C 169	RR JCT BOX-SPEED SW	AMP HDP	15	------	562012
C 170	FR JCT BOX-FLASHER UNIT	TC	2	------	561940
C 171	LH CONSOLE	AMP CPC	24	561642	561643
C 172					
C 173					
C 174	UNDER DASH RH-HTR MODULE	AMP MNL	9	561670	561669
C 175	UNDER DASH RH-HTR MODULE	AMP MNL	9	561670	561669
C 176	UNDER DASH RH-WIPER PULSE	AMP FF	6	------	561186
C 177	UNDER DASH RH-WIPER MOTOR	AMP FF	6	------	561186
C 178	UNDER DASH RH-LH FAN	TC	2	561030	560997
C 179	UNDER DASH RH-RH FAN	TC	2	561030	560997
C 180	RR JCT BOX-DIODE CONNECTOR	AMP MNL	15	561987	561986
C 181	RR JCT BOX-DIODE CONNECTOR	AMP MNL	15	561987	561986
C 182					
C 183	FR SERVICE CPT-KNEELING PAN.	PED WP	4	561610	561611
C 184	FR SERVICE CPT-KNEELING SW	ITT SS	3	561111	561080
C 185					
C 186					

NO	LOCATION	TYPE	CAVITY	#PIN HOUSING	#SOCKET HOUSING
C 186M	RR JCT BOX CPT.-SPD SIGN. M.TR	PED WP	2	561566	561690
C 186W	RR JCT BOX CPT.-SPD SIGN. WT	PED WP	2	561566	561690
C 187	FR JCT BOX-RPM RESISTOR CON.	AMP MNL	6	561552	561515
C 188					
C 189	ENGINE CPT RR DOOR B/U LT	TRUCK-LITE	2	------	562755
C 190	ENGINE CPT RR DOOR TAIL/ STOP LT	SUPER SEAL	3		562601
C 191	ENGINE CPT RR DOOR RH TAIL/STOP LT	SUPER SEAL	3		562601
C 192	ENGINE CPT RR DOOR DIR. LT	SUPER SEAL	3		562601
C 193					
C 194					
C 195					
C 198	ENGINE CPT RR DOOR LICENCE LT	PED WP	2	562348	562471
C 199					
C 200	RH HAT RACK-FLUORESCENT	AMP MNL	2	561248	561247
C 201	RH HAT RACK-FLUORESCENT	AMP MNL	2	561248	561247
C 202	RH HAT RACK-INDIRECT LIGHTING	MOLEX	2	---------	562758
C 203	RH HAT RACK-INDIRECT LIGHTING	MOLEX	6	---------	562759
C 204	RH HAT RACK-GENERAL LT	AMP MNL	2	560900	560898
C 205	FR SECT.-RH HAT RACK SPEAKER	AMP MNL	9	561661	561662
C 206	RH HAT RACK-READING LT	AMP FF	4	----------	562756
C 207	LH HAT RACK-READING LT	AMP FF	4	----------	562756
C 208	LH HAT RACK-BALLAST	MOLEX	2	----------	562758
C 209	LH HAT RACK HOTESS CHIME	AMP MNL	3	561667	561550
C 210	FR SECT.-LH HAT RACK SPEAKER	AMP MNL	9	561661	561662
C 211	FR ROOF-STORE LH	AMP MNL	2	560900	560898
C 212	FR ROOF-STORE RH	AMP MNL	2	560900	560898
C 213					
C 214	ENGINE CPT J1922				
C 215	TAG AXLE - A.T.C. SYSTEM				
C 216	TAG AXLE - A.T.C. SYSTEM				
C 217	RH DASH PANEL-FRONT CAMERA SW	EATON	8	--------	562763
C 218	RH DASH PANEL-FRONT CAMERA SW	AMP MNL	2	560900	560898
C 219	ENGINE CMPT. – FIRE DETECTOR	DEUTSCH	2	562486	562485
C 220	RR.JCT.BOX-FUEL PRIME PUMP	TC	1	561070	561073
C 221	BATTERY CMPT. FIRE DETECTOR	DEUTSCH	2	562486	562485
C 222	ENGINE CMPT. FIRE DETCTOR	DEUTSCH	2	562486	562485
C 223	ENGINE CMPT. FIRE DETCTOR	DEUTSCH	2	562486	562485
C 224	ENGINE CMPT. -VORAD J1939	DEUTSCH	3	562877	562884
C 225	ENGINE CMPT. -VORAD J1939	DEUTSCH	3	562877	562884
C 226	FR LH UPPER WHEEL CPT-VORAD J1939	DEUTSCH	3	562677	562884
C 227					
C 228					
C 229					
C 230	ENG.CPT.-FUEL PRIME PUMP FEED	DEUTSCH	2	562486	562485
C 231	ENG.CPT.-FUEL PRIME PUMP SW.	PED WP	2	561566	561690
C 232	ENG.CPT.-FUEL PRIME PUMP	PED WP	2	561566	561690
C 233	FR. SERVICE COMPT.	VDO	8		562043
C 234	FR. SERVICE COMPT.	VDO	8		562044
C 235	FR. SERVICE COMPT.	VDO	8		562041
C 236	LUGGAGE COMPARTEMENT	AMP MNL	4	560851	560852
C 237	UNDER DASH LH-JACOB CLUTCH SW	ITT SS	3	561111	561080
C 238	UNDER DASH LH-PASS. REC. DAMPER SW	EATON	8	------	562763
C 239	FR SERVICE CPT-HI BUOY VALVE	PED WP	2	561566	561690
C 240	FR SERVICE CPT-KNEEL PROX SW	PED WP	3	561781	562428
C 241	HEADLAMPS HI BEAM	HELLA	2		562623
C 242	HEADLAMPS LO BEAM	HELLA	2		562623
C 243	FR SERVICE CPT. HEADLAMPS	DEUTCH	3	565131	562789
C 244	FR SERVICE CPT-LH FOG LAMP	DEUTCH	2	562902	562901
C 245	FR SERVICE CPT-RH FOG LAMP	DEUTCH	2	562902	562901
C 246	FR SERVICE CPT. MIRROR	CONXALL	5	563091	563090
C 247	HEADLAMPS MARK & DIR LTS	AMP SUPER S	3		562601
C 248	FR JCT BOX-WIPER PULSE GEN	AMP FF	6	------	561108
C 249					
C 250	LH CONSOL PANEL- LOW BOY	PED	2	561566	561690
C 251	LH DASH PANEL-FAST IDLE SW	EATON	8	------	562763
C 252					
C 253	LH DASH PANEL-ETHER SW	EATON	8	------	562763

CONNECTORS CODE

NO	LOCATION	TYPE	CAVITY	#PIN HOUSING	#SOCKET HOUSING
C 254	INST. PANEL RH-ENTR.DOOR SW.	TORRIX	5	------	562110
C 255	LH DASH PANEL-JACOB & RETARDER SW	EATON	8	------	562763
C 256					
C 257					
C 258	LH SW PANEL-MULTI FUNC. SW	AMP FF	8	561188	------
C 259	LH SW PANEL-MULTI FUNC. SW	AMP FF	6	------	561108
C 260	FR SERVICE CPT-LUG DOOR LCK	PED WP	6	561606	561607
C 261	UNDER DASH RH-DOOR MODULE	AMP MNL	9	561670	561669
C 262	UNDER DASH RH-DOOR MODULE	AMP MNL	4	561551	561668
C 263	UNDER DASH RH-DOOR MODULE	AMP MNL	3	561667	561550
C 264	UNDER DASH RH-DOOR MODULE	AMP MNL	3	561667	561550
C 265	UNDER DASH RH-DOOR MODULE	AMP HDP-20	15	562011	562012
C 266					
C 267	UNDER DASH RH	AMP CPC	24	561642	561643
C 268	UNDER DASH LH-MIRROR	AMP MNL	6	561552	561515
C 269	UNDER DASH RH-MIRROR	AMP MNL	6	561552	561515
C 270	LH MIRROR POST	MOLEX	6	562070	562069
C 271	RH MIRROR POST	MOLEX	6	562070	562069
C 272	LH MIRROR	SPARTAN	6	------	990158
C 273	RH MIRROR	SPARTAN	6	------	990158
C 274	RR. JCT. BOX – SIGNAL ALT. MODULE	AMP MNL	12	561735	561734
C 275	UNDER DASH RH-DOOR MODULE	AMP MNL	9	561670	561669
C 276	UNDER DASH RH-LOCK SOL.VALVE	AMP MNL	2	561248	561247
C 277					
C 278					
C 279 *	FR SERVICE CPT.- STEERING ZF	DEUTCH	2		562486
C 279	UNDER DASH CYLINDER READ SW.	AMP MNL	2	561248	561247
C 280	LH CONSOLE-UNLOAD TAG SW.	NGR	10	------	562763
C 281					
C 282					
C 283					
C 284	LH DR'S ROOF - MONITOR FEED	PED WP	3	561781	561782
C 285	LH DR'S ROOF – SOUND SYSTEM	AMP CPC	24	561642	561643
C 286	RH SW PANEL-A/C & HEAT	EATON	8	------	562763
C 287	ENGINE COMPT-LTS SW	PED WP	2	561566	561690
C 288	RH SW PANEL-FRESH AIR	EATON	8	------	562763
C 289					
C 290					
C 291					
C 292	LH PARCEL RACK VIDEO PANEL– MONITOR	MOLEX	4	563040	563071
C 293	LH PARCEL RACK VIDEO PAN. – RCA RELAY	AMP MNL	2	561248	561247
C 294	LH PARCEL RACK VIDEO PAN.– RCA RELAY	AMP MNL	2	561248	561247
C 295	LH PARCEL RACK VID. PANEL– AMPLI VIDEO	MOLEX	4	563040	563071
C 296	LH PARCEL RACK VIDEO PAN. – MICRO SIGNAL	MOLEX	4	562507	562503
C 297	INSTRUMENT PANEL RH -LTS	AMP MNL	2	560900	560898
C 298					
C 299	RH DASH PANEL SW-GALLEY	EATON	8	------	562763
C 300					
C 301					
C 302					
C 303					
C 304					
C 305					
C 306					
C 307					
C 308	LH CONSOLE SW-RHEOSTAT	TC	2	561030	560997
C 309	DDEC ENGINE-ECM POWER CON.	PED MP	5	------	562345
C 310	LH DASH PANEL -LUG. DOOR LCK SW	EATON	8	------	562763
C 311	RH DASH PANEL -HOS & PAS CHIME SW	EATON	8	------	562763
C 312	RH DASH PANEL -READING LTS SW	EATON	8	------	562763
C 313	RH DASH PANEL -GEN & FLUOR LTS SW	EATON	8	------	562763
C 314	LH DASH PANEL-FR DEST. SIGN SW	EATON	8	------	562763
C 315	LH DASH PANEL-LH STORE SW	EATON	8	------	562763
C 316	LH CONSOLE SPARE SWITCH	EATON	8	------	562763
C 317	LH DASH PANEL-RH STORE SW	EATON	8	------	562763
C 318	LH CONSOLE SW-DRV WINDOW LIFT	EATON	8	------	562763
C 319					

NO	LOCATION	TYPE	CAVITY	#PIN HOUSING	#SOCKET HOUSING
C 320	RH DASH PANEL-DRIVER'S LTS SW	EATON	8	------	562763
C 321	READING LTS TEST				
C 322	LH CONSOLE DRV WIND LIFT MOT	PED PO	2	------	561848
C 323	LH CONSOLE CRUISE CTR SW PAN. AMP	CPC	9	561636	561637
C 324					
C 325	LH DASH PANEL-KNEELING SW	EATON	8	------	562763
C 326	ENGINE CMPT.	PED	4	------	561610
C 327	ENGINE CONTROL	DEUTSCH	6	562583	562581
C 328	GALLEY-LAMP	AMP MNL	2	561248	561247
C 329	ENGINE TACHO SIGNAL	PED WP	3	561781	561789
C 330					
C 331	GALLEY MICROWAVE SW	EATON	8	------	562763
C 332					
C 333	GALLEY RH CONTAINER SW	EATON	8	------	562763
C 334	GALLEY LH CONTAINER SW	EATON	8	------	562763
C 335					
C 336					
C 337	INSTR PANEL LH-UP WIPER SW	EATON	8	------	562763
C 338	INSTR PANEL LH-UP DEFROST SW	EATON	8	------	562763
C 339	INSTR PANEL LH-UP WASHER SW	EATON	8	------	562763
C 340	FR JCT. BOX FIRE PIEZO ALARM	AMP MNL	2	560900	560898
C 341	INSTR PANEL LH-HEAT MIRROR SW	EATON	8	------	562763
C 342	ENGINE RR START SW	DEUTSCH	2	562586	562585
C 343	INSTR PANEL LH-HEADLAMP SW	EATON	8	------	562763
C 344	INSTR PANEL LH-HAZARD LT SW	EATON	8	------	562763
C 345	INSTR PANEL LH-FOG LT SW	EATON	8	------	562763
C 346					
C 347	INSTR PANEL LH-DASH LT SW	AMP MNL	2	560900	560898
C 348	INSTR PANEL CENT-RACOR MODULE	MOLEX	6	562070	562067
C 349					
C 350	RH CONSOLE-THERMOMETER	AMP MNL	3	561667	561550
C 351	LH HAT RACK-FLUOR 110V	MOLEX	4	561477	561476
C 352	RH CONSOLE-DRV TEMP SENSOR	BURNDY	4	------	561104
C 353	INSTR PANEL RH-DRV FAN RHEOST	AMP MNL	6	561552	561515
C 354	INSTR PANEL RH-DRV TEMP CTR	AMP MNL	6	561552	561515
C 355	INSTR PANEL RH-FR TEMP CTR	AMP MNL	3	561667	561550
C 356					
C 357	INSTR PANEL RH-WATER TEMP GA	AMP MNL	3	561667	561550
C 358	INSTR PANEL RH-FUEL LEVEL GA	AMP MNL	3	561667	561550
C 359					
C 360					
C 361	FR ROOF-WIPER MOTOR	AMP FF	6	------	561186
C 362	FR ROOF-LAVATORY OCCUPIED LT	AMP MNL	2	561248	561247
C 363	FR ROOF-WATCH YOUR STEP LT	AMP MNL	2	561248	561247
C 364	FR ROOF-DESTINATION SIGN	AMP MNL	3	561667	561550
C 365	FR ROOF-UP WINDSHIELD DEFROST	AMP MNL	3	561667	561550
C 366	RH DASH PANEL-GRN & RED LEDS	AMP MNL	3	560908	562006
C 367	ENGINE COMPT-DIF OIL T SENSOR	PED WP	2	561566	561690
C 368	FR ROOF-DEST. SIGN BALLAST	AMP MNL	3	561667	561550
C 369	FR ROOF-DEST. SIGN OPER. SW	TORRIX	5	------	562110
C 370	FR ROOF-DEST. SIGN FLUOR.	AMP MNL	2	560900	560898
C 371	FR ROOF-DEST. SIGN FLUOR.	AMP MNL	2	560900	560898
C 372	FR ROOF-DEST. SIGN SPEED SW	MOLEX	4	561477	561476
C 373	FR ROOF-NO SMOKING LT	AMP MNL	2	561248	561247
C 374	LH SWITCH PANEL	AMP MNL	6	561552	561515
C 375					
C 376					
C 377	LH DASH PANEL-STOP ENG.OVERIDE SW	EATON	8	------	562763
C 378					
C 379					
C 380	LH CONSOLE-DDR CONNECTOR	DEUTSCH	6	562360	------
C 381					
C 382					
C 383					
C 384					
C 385	EVAPOTATOR COMP WATER PUMP	PED WP	2	561566	561690
C 386	LH DASH PANEL-WCL POWER SYSTEM SW	EATON	8	------	562763

CONNECTORS CODE

NO	LOCATION	TYPE	CAVITY	#PIN HOUSING	#SOCKET HOUSING
C 387	RR JCT BOX (WCL)	AMP MNL	9	561661	561662
C 388	RR JCT BOX (WCL)	AMP MNL	12	561735	561734
C 389	WCL REAR DOOR	MOLEX	4	561477	561476
C 390	LAVATORY WALL-WCL REMOTE CTR	EATON	8	------	562763
C 391	LAVATORY WALL-WCL LAMP	EATON	8	------	562763
C 392	LAVATORY WALL-WCL SW. LT.	EATON	2	------	561835
C 393	LAVATORY WALL-WCL REMOTE SYS.	AMP CPC	4	561686	561687
C 394	UNDER INSTR. PANEL- B/U MONITOR	AMP MNL	4	560851	560852
C 395	DRIVER'S COMPT. - B/U MONITOR	AMP	5	------	------
C 396	FR SECT. LH HAT RACK-SPEAKER	MOLEX	4	562507	562503
C 397	ENGINE COMPT. CRADLE ACC.	DEUTSCH	40	562281	562284
C 398					
C 399	ENGINE COMPT. – PRE-EXITATION ALT.	PED WP	2	561566	561690
C 400	ENGINE COMPT. BLOCK HEATER	PED MP	3	561781	561782
C 401					
C 402					
C 403	GALLEY FRIGO NORCOLD	AMP MNL	2	561248	561247
C 404	GALLEY LAMP	AMP MNL	2	561248	561247
C 405	LAST LUGGAGE COMP.- INVERTER SIGNAL	AMP MNL	2	561248	561247
C 406	FR JCT BOX COMPT.-ABS	AMP MNL	2	560900	560898
C 407					
C 408					
C 409	ENGINE CPT -LOW COOL. LEVEL	PED MP	2	------	562350
C 410	FR JCT BOX-DIODE CONNECTOR	AMP MNL	15	561987	561986
C 411	FR JCT BOX-DIODE CONNECTOR	AMP MNL	15	561987	561986
C 412	LH DASH PANEL-MASTER SWITCH SW	EATON	8	------	562763
C 413	ENG CPT-A/C HI UNLOAD PRS SW	PED WP	2	561566	561690
C 414					
C 415	RR JCT BOX – ENGINE SIGNAL	DEUTSCH	24	562280	562283
C 416	ENGINE CRADLE-ENGINE SIGNAL	FCI	10	563207	------
C 417	FRONT JCT BOX-DIODES	AMP MNL	15	561987	561986
C 418	LH DASH PANEL-HTR WINDSH.SW	EATON	8	------	562763
C 419	FR JCT BOX-RETARDER OR JACOB	AMP MNL	3	561667	561550
C 420					
C 421					
C 422					
C 423					
C 424	UNDER INSTRUMENT PANEL CENTER	AMP MNL	3	561667	561550
C 425	FR JCT BOX-DIODES	AMP MNL	15	561987	561986
C 426	ENGINE COMPT. CLUTCH CTR FAN	PED WP	3	561781	561782
C 427	PRO-HEAT	PED-WP	2	561566	561680
C 428	PRO-HEAT	PED WP	6	561606	561607
C 429	FR JCT BOX COMPT.	AMP MNL	6	561552	561515
C 430	LH CONSOLE-TIMER	AMP FF	8	561188	562363
C 431	LH CONSOLE-PRE HEAT.	TAB AMP	1	561540	561539
C 432	ENGINE CPT.-PROX. SW. DOOR AJAR	PED-WP	2	561566	561680
C 433	FR SERVICE CPT. KNEEL. PRESS. SW	PED WP	2	561566	561690
C 434	FRONT JCT. BOX-DIODES	AMP MNL	15	561987	561986
C 435	FR SERVICE CPT.(RH) KNEEL. PIEZO	AMP MNL	2	560900	560898
C 436	RH HAT RACK-WCL CENTER ROOF ACC	AMP CPC	16	561639	561640
C 437	RH HAT RACK-WCL FR & RR SECT.	AMP CPC	24	561642	561643
C 438	EVAP CMPT- A/C CONTROL	AMP MNL	2	561248	561247
C 439	EVAP CMPT- A/C CONTROL	AMP MNL	2	561248	561247
C 440	EVAP CMPT- A/C CONTROL	DEUTSCH	4	562479	562477
C 441	FR JCT BOX- DIODES	AMP MNL	15	561987	561986
C 442					
C 443					
C 444					
C 445					
C 446					
C 447					
C 448					
C 449					
C 450	SOUND SYS. JCT. PANEL	MOLEX	4	562507	562503
C 451	WIRELESS MICRO-FIRST CPT BAG	MOLEX	2	562550	562549
C 452	UNDER DASH INSTR. PANEL	MOLEX	2	562550	562549
C 453	SOUND SYS. JCT.PANEL-VCP	PED WP	2	561566	561680

NO	LOCATION	TYPE	CAVITY	#PIN HOUSING	#SOCKET HOUSING
C 454	SOUND SYS.JCT.PAN.-FILT. VCP	PED WP	2	561566	561680
C 455	WIRELESS MICRO-LH HAT-RACK	MOLEX	6	------	562464
C 456	WORLD TRANSM.-RETARDER ACCUM.	PED MP	2	------	562427
C 457	WORLD TRANSM.-MAIN CONNECTOR	DEUTSCH	31	562572	562536
C 458	WORLD TRANSM.-TURBINE SP.SENS	PED MP	2	------	562426
C 459	WORLD TRANSM.-ENGINE SP.SENS.	PED MP	2	------	562426
C 460	WORLD TRANSM.-SPEED SENSOR	ITT	2	------	562541
C 461	WORLD TRANSM.-RETARDER TEMP.	PED MP	2	561566	561680
C 462	WORLD TRANSM.-RETARD SOL."K"	PED MP	2	------	562426
C 463	WORLD TRANSM.-SENSOR CONN.	DEUTSCH	16	562570	562571
C 464	RR JCT BOX-DDR CONNECTOR	DEUTSCH	6	------	562360
C 465	LH CONSOLE-SHIFTER SELECTOR	PED	20	------	562825
C 466	FR SERVICE CPT.-RESIS. MOD.	PED WP	3	------	562428
C 467	FR SERVICE CPT.-RESIS. MOD.	PED WP	3	------	562428
C 468			8		
C 469					
C 470	FR LH UPPER WHELL CPT-SILENT 1000	AMP MNL	2	561248	561247
C 471	FR LH UPPER WHELL CPT-SILENT 1000	AMP MNL	2	561248	561247
C 472	FR LH UPPER WHELL CPT-SILENT 1000	PED WP	2	561566	561690
C 473	FR LH UPPER WHELL CPT-SILENT 1000	AMP MNL	3	561667	561550
C 474	DRIVER CPT.-TEMP. SENSOR	AMP MNL	2	561247	561248
C 475	RR JCT BOX-SPEED SIGN CONNECTOR	DEUTSCH	2	562486	562485
C 476					
C 477					
C 478	ELECTRONIC DESTINATION SIGN	AMP CPC	9	561636	561637
C 479	HVAC MODULE	MOLEX	3		562783
C 480	UNDER DASH LH-DR. FAN SPEED CTR. MOD	PED	4	561889	561890
C 481	UNDER DASH LH-DR. FAN SPEED CTR. MOD	PED	3	561781	561782
C 482					
C 483	FR SERVICE CPT. (NOT USED)	PED PC	2	------	562237
C 484	UNDER DASH LH.-FOOT DAMPER MOTOR	PED PC	2	------	562076
C 485	UNDER DASH LH.-DASH & DEFR. DAM.MOT.	AMP MNL	3	561667	561550
C 486					
C 487	S.S.PANEL – AUDIO IN AMPLI	MOLEX	4	------	563071
C 488	S.S.PANEL – AMPLI SIGNAL	MOLEX	8	------	562465
C 489	S.S.PANEL – SPEAKER OUTLET	MOLEX	6	------	562464
C 490					
C 491					
C 492					
C 493					
C 494					
C 495					
C 496					
C 497					
C 498					
C 499					
C 500	FR LH UPPER WHELL CPT -PRODRIVER	MOLEX	6	562070	562069
C 501	FR LH UPPER WHELL CPT -PRODRIVER	PED MP	7	562433	------
C 502	LH DASH PANEL-PRE HEATER SW.	EATON	8	------	562763
C 503	LH CONSOLE-PRE HEATER SW.	EATON	2	------	561837
C 504	LH CONSOLE WEBASTO TIMER	AMP	8	------	562852
C 505	LH CONSOLE ESPAR TIMER	AMP	9	------	562681
C 506	FR JCT BOX CPT. DIGITAL CLOCK	AMP	4	561685	561687
C 507	FR SECT. LH HAT-RACK DIG. CLOCK	MOLEX	4	561477	561476
C 508	RR JCT BOX-FAN CLUTCH RETARDER	AMP MNL	6	561552	561515
C 509	FR LH UPPER WHELL CPT -DATA LOGGER	PED MP	16	------	562530
C 510	FR LH UPPER WHELL CPT -DATA LOGGER	DEUTSCH	9	562531	------
C 511	FR LH UPPER WHELL CPT -DATA LOGGER	PED MP	4	562532	------
C 512	FR LH UPPER WHELL CPT -DATA LOGGER	PED MP	10	562533	------
C 513	FR LH UPPER WHELL CPT -DATA LOGGER	AMP MNL	3	561667	561550
C 514	FR LH UPPER WHELL CPT -DATA LOGGER	PED MP	6	562433	562417
C 515	FR JCT BOX CPT.-INTERCOM	MOLEX	4	561477	561476
C 516	FR JCT BOX CPT.-INTERCOM	MOLEX	6	562070	562069
C 517	LAVATORY WALL-INTERCOM	MOLEX	6	562070	562069
C 519	UNDER DASH RH-SEDAN DOOR	HUMPHREY	2	------	562580
C 520	UNDER DASH RH-SEDAN DOOR	HUMPHREY	2	------	641385
C 521	UNDER DASH RH-SEDAN DOOR	HUMPHREY	2	------	641385

CONNECTORS CODE

NO	LOCATION	TYPE	CAVITY	#PIN HOUSING	#SOCKET HOUSING
C 522					
C 523	FR JCT BOX-FUSE BLOCK	PED	8	562647	562646
C 524	FR JCT BOX-FUSE BLOCK	PED	8	562647	562646
C 525	FR JCT BOX-FUSE BLOCK	PED	8	562647	562646
C 526	FR JCT BOX-FUSE BLOCK	PED	8	562647	562646
C 527	FR JCT BOX-FUSE BLOCK	PED	8	562647	562646
C 528	FR JCT BOX-FUSE BLOCK	PED	8	562647	562646
C 529	FR JCT BOX-12V OUTLET	AMP MNL	2	561247	561248
C 530	RR JCT BOX-FUSE BLOCK	PED	8	562647	562646
C 531	RR JCT BOX-FUSE BLOCK	PED	8	562610	---
C 532	RR JCT BOX-FUSE BLOCK	PED	8	562610	---
C 533	RR JCT BOX-FUSE BLOCK	PED	8	562647	562646
C 534	RR JCT BOX-FUSE BLOCK	PED	8	562647	562646
C 535	RR JCT BOX-FIRE MODULE DETECT.	AMP MNL	3	561667	561550
C 536	UNDER DASH RH-DRIVER'S HTR TEMP. CTR	AMP MNL	6	561552	561515
C 537	BATT. CPT.-A/C PRESS. SIGN. RLY	AMP MNL	2	561248	561247
C 538	FR SERVICE CPT.-OUTSIDE TEMP. SENSOR	AMP MNL	2	561248	561247
C 539	HVAC DASH MODULE OUTPUT CON	MOLEX	24		562780
C 540	HVAC DASH MODULE INPUT CON	MOLEX	22		562781
C 541	SOUND SYS. JCT PANEL-AUDIO SEAT SYS.	PED WP	2	561566	561690
C 542	LH HAT RACK-AUDIO SEAT SYSTEM	AMP MNL	3	561667	561550
C 543					
C 544	SOUND SYS JCT PANEL-AUDIO SEAT SYS.	PED WP	3	561781	562428
C 545	LH HAT RACK-AUDIO SEAT SYSTEM	AMP MNL	3	561667	561550
C 546	WIRELESS MIC. CHARGING SYSTEM	MOLEX	2	--------	563025
C 547	RH DASH PANEL-ACCESSORIES	AMP CPC	37	561645	561646
C 548	LH DASH PANEL-T.T. LT. TEST SW.	EATON	8	------	562763
C 549	LH DASH PANEL-FAN CLUTCH OVERR. SW	EATON	8	------	562763
C 550	LAST LUGG. CPT. -WCL RICON	AMP CPC	16	561694	561695
C 551	LAST LUGG. CPT. -WCL RICON	AMP CPC	16	561694	561695
C 552	LAST LUGG. CPT. -WCL RICON	AMP CPC	9	561636	561637
C 553	UNDER DASH R.H. - CONTROL. HEAD	MOLEX	16	---------	562559
C 554	UNDER DASH R.H. - CONTROL. HEAD	MOLEX	16	---------	562559
C 555	UNDER DASH R.H. - CONTROL. HEAD	MOLEX	16	---------	562559
C 556	UNDER DASH R.H. - RADIO ACC.	MOLEX	2	562550	562549
C 557	UNDER DASH R.H. - RADIO ACC.	MOLEX	9	562556	562555
C 558	UNDER DASH R.H. - RADIO ACC.	MOLEX	4	562507	562503
C 559	SOUND SYS. JCT. PANEL – FILTER AMPLI	PED WP	2	561566	561690
C 560	SOUND SYS. JCT. PANEL – POWER AMPLI	MOLEX	4	562507	562503
C 561	L.H. HAT RACK - WIRELESS MICRO	MOLEX	8		562465
C 562	L.H. HAT RACK - VCP	MOLEX	12	562556	563070
C 563	L.H MODESTY PANEL - DRIVERS SPK.	MOLEX	4	562507	562503
C 564	L.H MODESTY PANEL - MICRO	MOLEX	4	562507	562503
C 565	R.H MODESTY PANEL - MICRO	MOLEX	4	562507	562503
C 566	L.H. CONSOLE - BOOM MICRO	MOLEX	4	562507	562503
C 567	L.H. CONSOLE - DRIVERS MICRO	MOLEX	4	562507	562503
C 568	SOUND SYS. JCT. PANEL - PASS. SPK	CINCH	4	562553	562552
C 569	SOUND SYS. JCT. PANEL - POWER AMPLI.	MOLEX	9	562556	562555
C 570	UNDER DASH PANEL TTLT	MOLEX	6		562464
C 571	UNDER DASH PANEL TTLT	MOLEX	20		562778
C 572	UNDER DASH PANEL TTLT	MOLEX	18		562779
C 573	UNDER DASH PANEL TTLT	MOLEX	8		562465
C 574	HAT -RACK FLUOR. INDIRECT LIGHTING	MOLEX	6	----------	562759
C 575	HAT -RACK FLUOR. INSTATION LIGHT	MOLEX	4	562507	562503
C 576	HAT -RACK FLUOR. INDIRECT LIGHTING	AMP MNL	3	561667	561550
C 577	HAT -RACK FLUOR. INDIRECT LIGHTING	AMP MNL	3	561667	561550
C 578	HAT -RACK FLUOR. INSTATION LIGHT	MOLEX	4	562507	562503
C 579	L.H HAT RACK – VCP POWER	MOLEX	4		563071
C 580	RH DASH PANEL-HAT RACK FAN SW	EATON	8	--------	562763
C 581					
C 582	FRONT SERVICE CMPT. - WINDOWS AJAR	PED WP	2	561566	561690
C 583	L.H. DASH PANEL - MASTER KEY	DEUTSCH	2	562486	562485
C 584	FRONT SERVICE CMPT. - AIR HORH	HUMPHREY	3	--------	641385
C 585					
C 586					
C 587	LH PARCEL RACK DVD UNIT	MOLEX	4	563040	563071
C 588	FRONT SERVICE CPT. CENTER SOUND SYS.	AMP. CPC	37	561645	561646

NO	LOCATION	TYPE	CAVITY	#PIN HOUSING	#SOCKET HOUSING
C 589	UNDER DASH - L.H. MIRROR	AMP MNL	9	561670	561669
C 590	UNDER DASH - R.H. MIRROR	AMP MNL	9	561670	561669
C 591	L.H.CONSOLE - MIRROR L.H.	EURAMTEC	8	--------	562799
C 592	L.H.CONSOLE - MIRROR R.H.	EURAMTEC	8	--------	562799
C 593	BATTERY CMPT. - CHARGER	PED WP	3	561781	561782
C 594	FRONT ROOF - DRIVERS LIGHT	LEEKRAFT		---------	562803
C 595	DASH CENTER MODULE - OPEN DOOR	MOLEX	4	561477	561476
C 596	DASH CENTER MODULE - CLOSE DOOR	MOLEX	4	561477	561476
C 597	L.H. DASH PANEL - DISPLAY SET SW.	MOLEX	5		562812
C 598	L.H. DASH PANEL - DISPLAY SET SW.	MOLEX	5		562812
C 599					
C 600	ENGINE CPT.-A/C LOW PRESS SW. UNLOAD	PED	2	562348	562471
C 601	L.H. ROOF - WINDOW AJAR	AMP MNL	2	561248	561247
C 602	L.H. ROOF - WINDOW AJAR	MOLEX	4	561477	561476
C 603	R.H. ROOF - WINDOW AJAR	AMP MNL	2	561248	561247
C 604	LH PARCEL RACK DVD VIDEO STABILIZER	SWITCHCRAFT	1	563074	
C 605	HAT RACK - MOTOR FAN	PED	2	560997	561030
C 606	HAT RACK - MOTOR FAN	PED	2	560997	561030
C 607					
C 608	FRONT SERVICE CMPT. SPEED SIGNAL	PED WP	2	561566	561690
C 609	LAVATORY - NIGHT LIGHT				
C 610					
C 611	HAT RACK READING LTS RICON	MOLEX	6	562558	562557
C 612	HAT -RACK FLUOR. INSTATION LTS RICON	MOLEX	4	562507	562503
C 613	HAT -RACK INDIRECT LTS RICON	AMP MNL	3	561667	561550
C 614	HAT -RACK INDIRECT LTS RICON	AMP MNL	3	561667	561550
C 615	LH PARCEL RACK DVD SING ALONG ADAPT.	MOLEX	2	562550	562549
C 616					
C 701	ZF TRANSMISSION ECU	KOSTAL	20		
C 702	SHIFT SELECTOR – LH CONSOLE	AMP	14		563338
C 712	NEUTRAL SWITCH ON ZF TRANSM. (TOP)	AMP	4		563340
C 714	OUTPUT SENSOR ON ZF TRANSM. (BOTTOM)	AMP	4		563340
C 717	BATT. CPT - MAIN CONNECTOR	AMP CPC	22	561642	561643
C 720	ENGINE COMPT – BLKHD CONNECTOR	DEUTSCH	31	563359	563358
C 721	LH CONSOLE – ZF TESTMAN DIAGNOSTIC	AMP MNL	6	563356	
C 723	ENGINE COMPT – FOR TRANSM.	DEUTSCH	3		562884
C 736	ENGINE COMPT – ZMTEC MODULE	PACKARD	30	563053	
C 740	DRIVE AXLE – EASY START SOL VALVE	LEONI	2	--	641949
C 742	BATT. CPT – FUSE BLOCK	AMP	8	562446	
C 745	FR SERV.COMPT – THROTTLE POS. SENSOR	PED WP	3	561781	
C 760	FR SERV. COMPT – TO J1939	DEUTSCH	3		
C 761	FR SERV. COMPT – TO J1939	DEUTSCH	3		562884
C 762	ENGINE COMPT – TO J1939	DEUTSCH	3		562884
C 763	ENGINE COMPT – TO J1939	DEUTSCH	3		562884
C 764	ENGINE COMPT – TO J1939	DEUTSCH	3		562884
C 765	ENGINE COMPT – TO J1939	DEUTSCH	3		562884
C 766	ENGINE COMPT – TO J1939	DEUTSCH	3		562884
C X	CLUSTER	JAE	22		562766
C Y	CLUSTER	JAE	30		562767
L X	CLUSTER	JAE	22		562764
L					
R					

CONNECTORS CODE

NO	LOCATION	TYPE	CAVITY	#PIN HOUSING	#SOCKET HOUSING
AA1	BEHIND DASH - SONALERT	BOSCH	5		561183
AA2	BEHIND DASH - SONALERT	BOSCH	5		561183
C X1	FR SERVICE COMPT- ECU ABS	AMP	15		563200
C X2	FR SERVICE COMPT- ECU ABS	AMP	18		563201
C RH	DDEC ENGINE- RELATIVE HUMIDITY SENS.	FCI	4		563277
C RXTX	HVAC DASN MODULE COMMUNICATION	MOLEX	3	563206	562873
C S	RR JCT BOX ECU WORLD TR.	PED	32		562817
C T	RR JCT BOX ECU WORLD TR.	PED	32		562824
C V	RR JCT BOX ECU WORLD TR.	PED	32		562823
		AMP CPC	9	561636	561637
C WX1	ENGINE CPT-WEBASTO PRE-HEAT WATER	AMP SEALED	7		563135
C WX3	ENGINE CPT-WEBASTO PRE-HEAT WATER	AMP SEALED	7	563136	
C Y	CLUSTER	JAE	30	---	562765
C 1	FR JCT BOX COMPARTMENT	AMP CPC	14	561585	561584
C 2	FR JCT BOX COMPARTMENT	AMP CPC	16	561639	561640
C 3	FR JCT BOX COMPARTMENT	AMP CPC	24	561641	561643
C 4	FR JCT BOX COMPARTMENT	AMP CPC	37	561644	561646
C 5	FR SERVICE COMPT.-UNDERNEATH	AMP CPC	37	561644	561646
C 6	FR SERVICE COMPT.-UNDERNEATH	AMP CPC	16	561639	561640
C 7					
C 8	FR SERVICE COMPT.-UNDERNEATH	AMP CPC	24	561641	561643
C 9	FR SERVICE COMPT.-UNDERNEATH	AMP CPC	24	561641	561643
C 10	LUGGAGE COMPT. WATER BOOSTER PUMP	PED	2	562348	562471
C 11	FR SERVICE COMPARTMENT	AMP CPC	37	561644	561646
C 12	FR SERVICE COMPARTMENT	AMP CPC	16	561639	561640
C 13	LH CONSOLE-CTR MIRROR	AMP MNL	6	561552	561515
C 14	UNDER DASH-LH MIRROR	AMP MNL	9	561661	561662
C 15	A/C CLUTCH	PED WP	2	561566	561690
C 16	LH CONSOLE SW-CRUISE ON OFF	EATON	10	------	562763
C 17	LH CONSOLE SW-CRUISE RESUME	EATON	10	------	562763
C 18	LH CONSOLE SW-CRUISE SET	EATON	10	------	562763
C 19	LH CONSOLE DECEL SW	EATON	10	------	562763
C 20	RR JCT BOX	DEUTSCH	70	562282	562285
C 21	RR JCT BOX	DEUTSCH	24	562280	562283
C 22	RR JCT BOX - EATON TRANSM.	AMP MNL	6	561552	561515
C 23	DDEC ENGINE-ECM J1939	PED MP	6	-------	561962
C 24	DDEC ENGINE-12Vi FOR OPTION	PED WP	1	-------	561577
C 25					
C 26	HYD & MAN TRANSM.-NEUT.& B/U	PED WP	4	561610	561611
C 27	HYD & MAN TRANSM.-SPEED SENS.	PED WP	2	561566	561690
C 28	EATON TRANSMISSION	DEUTCH	3	562877	562884
C 29	EATON TRANSMISSION	PED MP	6	562878	------
C 30	RR JCT BOX - ECU EATON TRANSM.	PED MP	32	------	562866
C 31	RR JCT BOX - ECU EATON TRANSM.	PED MP	24	------	562865
C 32	DDEC ENGINE-ECM	PED	30	------	561600
C 33	RR JCT BOX - EATON TRANSM.	DEUTCH	9	562531	------
C 34	RH. CONSOLE - EATON TRANSM. SHIFTER	PED MP	3	------	562871
C 35	RR JCT BOX	DEUTCH	40	562281	562284
C 36	RH. CONSOLE - EATON TRANSM. SHIFTER	PED MP	24	------	562874
C 37	RR SECTION-LH HAT RACK	MOLEX	6	562558	562557
C 38	RR SECTION-RH HAT RACK	MOLEX	6	562558	562557
C 39	LH CONSOLE - EATON TRANSM. DISPLAY	AMP MNL	4	561551	561668
C 40	RR JCT BOX - EATON TRANSM. J1939	DEUTCH	3	562877	562884
C 41	LAVATORY ROOF LIGHT	LEECRAFT	2	-----	562803
C 42	LAVATORY BACK WALL-WTR TANK	AMP MNL	2	560900	560898
C 43	LAVATORY BACK WALL-ACCES.	AMP MNL	9	561661	561662
C 44	EATON TRANSM. J1939	DEUTCH	3	562877	562884
C 45	FR JCT BOX COMPARTMENT	AMP CPC	24	561642	561643
C 46	EATON TRANSM. J1939	DEUTCH	3	562877	562884
C 47	FR SERVICE COMPARTMENT	AMP CPC	16	561694	561695
C 48	FR. SERVICE CMPT.PRESS SW PARKBREAK	DEUTCH	4	562479	562477
C 49	BATTERIE COMPT.-LT	AMP MNL	2	561248	561247
C 50	FR SERVICE COMPT.-LOW BUOY	PED WP	1	561605	561577
C 51					
C 52	RR JCT BOX	AMP CPC	24	561642	561643
C 53	SPARE TIRE COMPT ENTRANCE STEP LIGHT	DEUTCH	2	562486	562485
C 54	SPARE TIRE COMPT ENTRANCE STEP LIGHT	DEUTCH	2	562486	562485

NO	LOCATION	TYPE	CAVITY	#PIN HOUSING	#SOCKET HOUSING
C 55	RH SWITCH PANEL	AMP CPC	9	561636	561637
C 56	HAT RACK- MOTOR FAN	MOLEX	6	562558	562557
C 57	HAT RACK- MOTOR FAN	MOLEX	6	562558	562557
C 58	RR JCT BOX AC PANEL	DEUTSCH	24	562280	562283
C 59	RR JCT BOX AC PANEL	AMP CPC	14	561584	561583
C 60	RR JCT BOX COMPT.-LT	AMP MNL	2	561248	561247
C 61	LUGGAGE COMPARTMENT LTS	AMP MNL	2	561248	561247
C 62	LUGGAGE COMPARTMENT LTS	AMP MNL	2	561248	561247
C 63	LUGGAGE COMPARTMENT LTS	AMP MNL	2	561248	561247
C 64	LUGGAGE COMPARTMENT LTS	AMP MNL	2	561248	561247
C 65	LUGGAGE COMPARTMENT LTS	AMP MNL	2	561248	561247
C 66	LUGGAGE COMPARTMENT LTS	AMP MNL	2	561248	561247
C 67	LUGGAGE COMPARTMENT LTS	AMP MNL	2	561248	561247
C 68	LUGGAGE COMPARTMENT LTS	AMP MNL	2	561248	561247
C 69	RR AXLE ACC-INSIDE PVC END	PED WP	6	561568	561578
C 70	LH CONSOLE	AMP CPC	16	561642	561643
C 71	FR JCT BOX COMPARTMENT	AMP CPC	37	561645	561646
C 72	FR JCT BOX COMPARTMENT	AMP CPC	24	561642	561643
C 73	DASH CENTER PANEL	AMP CPC	16	561639	561640
C 74	FR JCT BOX COMPARTMENT	AMP CPC	37	561645	561646
C 75	SERV CPT. RXT. ENT. DOOR SW	DEUTSCH	4	562479	562477
C 76	LUGGAGE COMPT.-AIR RET.SENS.	AMP MNL	2	561248	561247
C 77	LUGGAGE COMPT.-AIR RET.SENS.	AMP MNL	2	561248	561247
C 78					
C 79					
C 80	LUGGAGE COMPT.-AIR RET.SENS.	AMP MNL	2	561248	561247
C 81	PASSENGER COMPT.-AISLE LTS	AMP MNL	2	560900	560898
C 82	ENTRANCE DOOR	MOLEX	6	562070	562069
C 83	ENTRANCE DOOR-PROIMITY SW	MOLEX	4	561477	561476
C 84	ENTRANCE DOOR-PRESSURE SW	PED WP	2	561566	561690
C 85	UNDER INSTRUMENT PANEL LH	AMP MTA-100	------	562248	------
C 86					
C 87	RR END ROOF	AMP CPC	9	561636	561637
C 88					
C 89	RR END ROOF-B/U NONITOR	AMP CPC	4	561582	561581
C 90	RR JCT BOX	AMP CPC	15	561987	561986
C 91	RR JCT BOX	AMP CPC	37	561714	561713
C 92	FR LH UPPER WHELL CPT-ABS	AMP CPC	9	561635	561637
C 93	FR LH UPPER WHELL CPT-ABS		35	------	641094
C 94	RH CONSOLE ENTRANCE STEP LIGHT	DEUTCH	2	562486	562485
C 95	CONDENSOR CPT - LIQ. SOL. VALVE	PED WP	2	561566	561690
C 96	FR AXLE ACCESSORIES	AMP CPC	14	561585	561585
C 97	RR AXLE ACC-INSIDE PVC END	PED WP	6	561568	561578
C 98	FR SERVICE COMPT-EL.FT.PEDAL	PED WP	3	561782	561781
C 99	FR SERVICE COMPT LTS	AMP MNL	2	561248	561247
C 100	LH CONSOLE – 120 VOLTS SWITCH	EATON	8	------	562763
C 101	FR SERVICE COMPT-ELEC. HORNS	PED WP	2	561566	561690
C 102	FR SERV & SIDE CPT-FLASH. LH	GROTE	2	------	562155
C 103	FR SERV & SIDE CPT-MARKERS	GROTE	2	------	562155
C 104	LAVATORY TRAP-FLUSH PUMP SW.	DEUTSCH	4	562479	562477
C 104	FR SERV & SIDE CPT-FLASH. RH	GROTE	2	------	562155
C 105	FR SERVICE COMPT-LIQ.S.VALVE	PED WP	2	561566	561690
C 106	FR SERVICE COMPT-WATER VALVE	PED WP	2	561566	561690
C 107					
C 108	FR SERVICE COMPT-KNEEL.SYS	PED WP	2	561566	561690
C 109	FR SERVICE COMPT-KNEEL.SYS	PED WP	2	561566	561690
C 110	FR SERVICE COMPT-KNEEL.SYS	PED WP	2	561566	561690
C 111	EVAPORATOR COMPT-DAMPER	DEUTSCH	2	562486	562485
C 112	LAVATORY BACK WALL-FLUSH PUMP SW.	DEUTSCH	4	562479	562477
C 113	RR MARKER LT	GROTE	2	------	562155
C 114	RR J. BOX CPT DOOR DIR LT LH	GROTE	2	------	562155
C 115					
C 116	ENGINE COMPT. LTS	GROTE	2		563268
C 117	RR JCT BOX MARKER LT	GROTE	2	------	562155
C 117	FR SRV. COMPT. KNEELING UP SOL VALVE	PED WP	2	561761	
C 118	ENGINE COMPT-LAVATORY FAN	PED WP	2	561566	561690
C 119	ENGINE CPT RR DOOR RH LO LAMP	PED WP	6	561606	561607

CONNECTORS CODE

NO	LOCATION	TYPE	CAVITY	#PIN HOUSING	#SOCKET HOUSING
C 120	ENGINE CPT RR DOOR LH LO LAMP	PED WP	6	561606	561607
C 121	BATTERIE CPT. DOOR DIR LT RH	GROTE	2	------	562155
C 122					
C 123	TAG AXLE-UNLOAD TAG RH VALVE	PED WP	2	561566	561690
C 124	ENGINE CPT-ETHER SW	PED WP	2	561566	561690
C 125	ENGINE CPT-B/U ALARM	PED WP	2	561566	561690
C 126	ENGINE CPT-FLUSHING PUMP	PED WP	2	561566	561690
C 127	ENGINE CPT-FUEL FILTER	PED WP	2	561566	561690
C 128	ENGINE CPT-A/C COMPR.CLUTCH	ITT SS	2	561813	561812
C 129					
C 130	ENGINE CPT-UNLOADER	ITT SS	2	561813	561812
C 131	ENGINE CPT-UNLOADER	ITT SS	2	561813	561812
C 132	ENGINE CPT-A/C LO PRESS SW	PED WP	2	561566	561690
C 133	ENGINE CPT-A/C HI PRESS SW	PED WP	2	561566	561690
C 134	FR JCT BOX-LUGGAGE DIODE CON.	AMP MNL	15	561987	561986
C 135	FR JCT BOX-LUGGAGE DIODE CON.	AMP MNL	15	561987	561986
C 136	RR JCT BOX - A/C PANEL DIODE CONN.	AMP MNL	15	561987	561986
C 137	RR JCT BOX-TRANSMITTER	AMP MNL	2	560900	560898
C 138	RR JCT BOX-CONTROL MODULE	AMP HDP	15	------	562012
C 139	RR JCT BOX-LOGIC MODULE	AMP HDP	15	562011	------
C 140	HVAC DASH MODULE THERMOMETER	MOLEX	4		562782
C 141	INSTRUMENT PANEL LH UNLOAD TAG	AMP	2	561248	561247
C 142	LAVATORY DOOR WALL	AMP MNL	2	561248	561247
C 143					
C 144	UNDER LH SEAT-AISLE LTS	AMP MNL	4	560851	560852
C 145	RR JCT BOX CPT-RR SIDE LTS	AMP MNL	9	561670	561669
C 146	ENGINE CPT-MODULATOR VALVE	AMPHENOL	2	------	560412
C 147	BATT & RR J.B.CPT-DOCK.LTS	PED WP	2	561566	561690
C 148					
C 149	CONDENSER CPT-FAN MOTOR	ORDNANCE	3	562555	562001
C 150					
C 151	EVAPORATOR CPT-THERMOSTAT	ITT SS	2	561813	562159
C 152	CONDENSER CPT-FUEL GAUGE	PED WP	4	561610	561611
C 153	EVAPORATOR CPT-AIR AMB. SENS	AMP MNL	2	561248	561247
C 154	EVAPORATOR CPT-FRESH AIR SENS	ITT SS	2	561813	561812
C 155	EVAPORATOR CPT-WATER VALVE	PNEUMAC	4	563204	
C 156	EVAPOR. CPT-BYPASS WATER VAL.	PED WP	2	561566	561690
C 157					
C 158	CONDENSER CPT-A/C LO TEMP.	PED WP	2	561566	561690
C 159	CONDENSER CPT-A/C HI TEMP.	PED WP	2	561566	561690
C 160	FR AXLE-ABS RH SENSOR	WABCO	2	641132	------
C 161	FR AXLE-ABS RH VALVE	WABCO	3	------	641098
C 162	FR AXLE-ABS LH VALVE	WABCO	3	------	641098
C 163	FR AXLE-ABS LH SENSOR	WABCO	2	641132	------
C 164	RR AXLE-ABS LH SENSOR	WABCO	2	641132	------
C 165	RR AXLE-ABS LH VALVE	WABCO	3	------	641098
C 166	RR AXLE-ABS RH VALVE	WABCO	3	------	641098
C 167	RR AXLE-ABS RH SENSOR	DEUTSCH	2	641132	------
C 168	RR AXLE-ABS OPT ATC	PED WP	2	561566	561690
C 169	RR JCT BOX-SPEED SW	AMP HDP	15	------	562012
C 170	FR JCT BOX-FLASHER UNIT	TC	2	------	561940
C 171	LH CONSOLE	AMP CPC	24	561642	561643
C 172					
C 173					
C 174	UNDER DASH RH-HTR MODULE	AMP MNL	9	561670	561669
C 175	UNDER DASH RH-HTR MODULE	AMP MNL	9	561670	561669
C 176	UNDER DASH RH-WIPER PULSE	AMP FF	6	------	561186
C 177	UNDER DASH RH-WIPER MOTOR	AMP FF	6	------	561186
C 178	UNDER DASH RH-LH FAN	TC	2	561030	560997
C 179	UNDER DASH RH-RH FAN	TC	2	561030	560997
C 180	RR JCT BOX-DIODE CONNECTOR	AMP MNL	15	561987	561986
C 181	RR JCT BOX-DIODE CONNECTOR	AMP MNL	15	561987	561986
C 182					
C 183	FR SERVICE CPT-KNEELING PAN.	PED WP	4	561610	561611
C 184	FR SERVICE CPT-KNEELING SW	ITT SS	3	561111	561080
C 185					
C 186					

NO	LOCATION	TYPE	CAVITY	#PIN HOUSING	#SOCKET HOUSING
C 186M	RR JCT BOX CPT.-SPD SIGN. M.TR	PED WP	2	561566	561690
C 186W	RR JCT BOX CPT.-SPD SIGN. WT	PED WP	2	561566	561690
C 187	FR JCT BOX-RPM RESISTOR CON.	AMP MNL	6	561552	561515
C 188					
C 189	ENGINE CPT RR DOOR B/U LT	TRUCK-LITE	2	------	562755
C 190	ENGINE CPT RR DOOR TAIL/ STOP LT	SUPER SEAL	3		562601
C 191	ENGINE CPT RR DOOR RH TAIL/STOP LT	SUPER SEAL	3		562601
C 192	ENGINE CPT RR DOOR DIR. LT	SUPER SEAL	3		562601
C 193					
C 194					
C 195					
C 198	ENGINE CPT RR DOOR LICENCE LT	PED WP	2	562348	562471
C 199					
C 200	RH HAT RACK-FLUORESCENT	AMP MNL	2	561248	561247
C 201	RH HAT RACK-FLUORESCENT	AMP MNL	2	561248	561247
C 202	RH HAT RACK-INDIRECT LIGHTING	MOLEX	2	---------	562758
C 203	RH HAT RACK-INDIRECT LIGHTING	MOLEX	6	---------	562759
C 204	RH HAT RACK-GENERAL LT	AMP MNL	2	560900	560898
C 205	FR SECT.-RH HAT RACK SPEAKER	AMP MNL	9	561661	561662
C 206	RH HAT RACK-READING LT	AMP FF	4	----------	562756
C 207	LH HAT RACK-READING LT	AMP FF	4	----------	562756
C 208	LH HAT RACK-BALLAST	MOLEX	2	----------	562758
C 209	LH HAT RACK HOTESS CHIME	AMP MNL	3	561667	561550
C 210	FR SECT.-LH HAT RACK SPEAKER	AMP MNL	9	561661	561662
C 211	FR ROOF-STORE LH	AMP MNL	2	560900	560898
C 212	FR ROOF-STORE RH	AMP MNL	2	560900	560898
C 213					
C 214	ENGINE CPT J1922				
C 215	TAG AXLE - A.T.C. SYSTEM				
C 216	TAG AXLE - A.T.C. SYSTEM				
C 217	RH DASH PANEL-FRONT CAMERA SW	EATON	8	--------	562763
C 218	RH DASH PANEL-FRONT CAMERA SW	AMP MNL	2	560900	560898
C 219	ENGINE CMPT. – FIRE DETECTOR	DEUTSCH	2	562486	562485
C 220	RR.JCT.BOX-FUEL PRIME PUMP	TC	1	561070	561073
C 221	BATTERY CMPT. FIRE DETECTOR	DEUTSCH	2	562486	562485
C 222	ENGINE CMPT. FIRE DETCTOR	DEUTSCH	2	562486	562485
C 223	ENGINE CMPT. FIRE DETCTOR	DEUTSCH	2	562486	562485
C 224	ENGINE CMPT. -VORAD J1939	DEUTSCH	3	562877	562884
C 225	ENGINE CMPT. -VORAD J1939	DEUTSCH	3	562877	562884
C 226	FR LH UPPER WHEEL CPT-VORAD J1939	DEUTSCH	3	562677	562884
C 227					
C 228					
C 229					
C 230	ENG.CPT.-FUEL PRIME PUMP FEED	DEUTSCH	2	562486	562485
C 231	ENG.CPT.-FUEL PRIME PUMP SW.	PED WP	2	561566	561690
C 232	ENG.CPT.-FUEL PRIME PUMP	PED WP	2	561566	561690
C 233	FR. SERVICE COMPT.	VDO	8		562043
C 234	FR. SERVICE COMPT.	VDO	8		562044
C 235	FR. SERVICE COMPT.	VDO	8		562041
C 236	LUGGAGE COMPARTEMENT	AMP MNL	4	560851	560852
C 237	UNDER DASH LH-JACOB CLUTCH SW	ITT SS	3	561111	561080
C 238	UNDER DASH LH-PASS. REC. DAMPER SW	EATON	8	------	562763
C 239	FR SERVICE CPT-HI BUOY VALVE	PED WP	2	561566	561690
C 240	FR SERVICE CPT-KNEEL PROX SW	PED WP	3	561781	562428
C 241	HEADLAMPS HI BEAM	HELLA	2		562623
C 242	HALOGEN HEAHLAMPS LO BEAM	HELLA	2		562623
C 242	XENON HEADLAMPS LO BEAM	DELPHI	2		563366
C 243	FRONT CAP- HEADLIGHTS MAIN CONN	DEUTCH	6	565131	562789
C 244	FR SERVICE CPT-LH FOG LAMP	DEUTCH	2	562902	562901
C 245	FR SERVICE CPT-RH FOG LAMP	DEUTCH	2	562902	562901
C 246	UNDER DASH - L.H. MIRROR	CONNXALL	5	563196	563090
C 247	HEADLAMPS MARK & DIR LTS	AMP SUPER S	3		562601
C 248	FR JCT BOX-WIPER PULSE GEN	AMP FF	6	------	561108
C 249					
C 250	LH CONSOL PANEL- LOW BOY	PED	2	561566	561690
C 251	LH DASH PANEL-FAST IDLE SW	EATON	8	------	562763
C 252					

CONNECTORS CODE

NO	LOCATION	TYPE	CAVITY	#PIN HOUSING	#SOCKET HOUSING
C 253	LH DASH PANEL-ETHER SW	EATON	8	------	562763
C 254	INST. PANEL RH-ENTR.DOOR SW.	TORRIX	5	------	562110
C 255	LH DASH PANEL-JACOB & RETARDER SW	EATON	8	------	562763
C 256					
C 257					
C 258	LH SW PANEL-MULTI FUNC. SW	AMP FF	8	561188	------
C 259	LH SW PANEL-MULTI FUNC. SW	AMP FF	6	------	561108
C 260	FR SERVICE CPT-LUG DOOR LCK	PED WP	6	561606	561607
C 261	UNDER DASH RH-DOOR MODULE	AMP MNL	9	561670	561669
C 262	UNDER DASH RH-DOOR MODULE	AMP MNL	4	561551	561668
C 263	UNDER DASH RH-DOOR MODULE	AMP MNL	3	561667	561550
C 264	UNDER DASH RH-DOOR MODULE	AMP MNL	3	561667	561550
C 265	UNDER DASH RH-DOOR MODULE	AMP HDP-20	15	562011	562012
C 266					
C 267	UNDER DASH RH	AMP CPC	24	561642	561643
C 268					
C 269	UNDER DASH - R.H. MIRROR	CONNXALL	5	563196	563090
C 270	LH MIRROR POST	MOLEX	6	562070	562069
C 271	RH MIRROR POST	MOLEX	6	562070	562069
C 272	LH MIRROR	SPARTAN	6	------	990158
C 273	RH MIRROR	SPARTAN	6	------	990158
C 274	RR. JCT. BOX – SIGNAL ALT. MODULE	AMP MNL	12	561735	561734
C 275	UNDER DASH RH-DOOR MODULE	AMP MNL	9	561670	561669
C 276	UNDER DASH RH-LOCK SOL.VALVE	AMP MNL	2	561248	561247
C 277					
C 278					
C 279 *	FR SERVICE CPT.- STEERING ZF	DEUTCH	2		562486
C 279	UNDER DASH CYLINDER READ SW.	AMP MNL	2	561248	561247
C 280	LH CONSOLE-UNLOAD TAG SW.	NGR	10	------	562763
C 281					
C 282					
C 283					
C 284	LH DR'S ROOF - MONITOR FEED	PED WP	3	561781	561782
C 285	LH DR'S ROOF – SOUND SYSTEM	AMP CPC	24	561642	561643
C 286	RH SW PANEL-A/C & HEAT	EATON	8	------	562763
C 287	ENGINE COMPT-LTS SW	PED WP	2	561566	561690
C 288	RH SW PANEL-FRESH AIR	EATON	8	------	562763
C 289					
C 290					
C 291					
C 292	LH PARCEL RACK VIDEO PANEL– MONITOR	MOLEX	4	563040	563071
C 293	LH PARCEL RACK VIDEO PAN. – RCA RELAY	AMP MNL	2	561248	561247
C 294	LH PARCEL RACK VIDEO PAN.– RCA RELAY	AMP MNL	2	561248	561247
C 295	LH PARCEL RACK VID. PANEL– AMPLI VIDEO	MOLEX	4	563040	563071
C 296	LH PARCEL RACK VIDEO PAN. – MICRO SIGNAL	MOLEX	4	562507	562503
C 297	INSTRUMENT PANEL RH -LTS	AMP MNL	2	560900	560898
C 298					
C 299	RH DASH PANEL SW-GALLEY	EATON	8	------	562763
C 300					
C 301					
C 302					
C 303					
C 304					
C 305					
C 306					
C 307					
C 308	LH CONSOLE SW-RHEOSTAT	TC	2	561030	560997
C 309	DDEC ENGINE-ECM POWER CON.	PED MP	5	------	562345
C 310	LH DASH PANEL -LUG. DOOR LCK SW	EATON	8	------	562763
C 311	RH DASH PANEL -HOS & PAS CHIME SW	EATON	8	------	562763
C 312	RH DASH PANEL -READING LTS SW	EATON	8	------	562763
C 313	RH DASH PANEL -GEN & FLUOR LTS SW	EATON	8	------	562763
C 314	LH DASH PANEL-FR DEST. SIGN SW	EATON	8	------	562763
C 315	LH DASH PANEL-LH STORE SW	EATON	8	------	562763
C 316	LH CONSOLE SPARE SWITCH	EATON	8	------	562763
C 317	LH DASH PANEL-RH STORE SW	EATON	8	------	562763
C 318	LH CONSOLE SW-DRV WINDOW LIFT	EATON	8	------	562763

NO	LOCATION	TYPE	CAVITY	#PIN HOUSING	#SOCKET HOUSING
C 319					
C 320	RH DASH PANEL-DRIVER'S LTS SW	EATON	8	------	562763
C 321	READING LTS TEST				
C 322	LH CONSOLE DRV WIND LIFT MOT	PED PO	2	------	561848
C 323	LH CONSOLE CRUISE CTR SW PAN. AMP	CPC	9	561636	561637
C 324					
C 325	LH DASH PANEL-KNEELING SW	EATON	8	------	562763
C 326	ENGINE CMPT.	PED	4	------	561610
C 327	ENGINE CONTROL	DEUTSCH	6	562583	562581
C 328	GALLEY-LAMP	AMP MNL	2	561248	561247
C 329	ENGINE TACHO SIGNAL	PED WP	3	561781	561789
C 330					
C 331	GALLEY MICROWAVE SW	EATON	8	------	562763
C 332					
C 333	GALLEY RH CONTAINER SW	EATON	8	------	562763
C 334	GALLEY LH CONTAINER SW	EATON	8	------	562763
C 335					
C 336					
C 337	INSTR PANEL LH-UP WIPER SW	EATON	8	------	562763
C 338	INSTR PANEL LH-UP DEFROST SW	EATON	8	------	562763
C 339	INSTR PANEL LH-UP WASHER SW	EATON	8	------	562763
C 340	FR JCT. BOX FIRE PIEZO ALARM	AMP MNL	2	560900	560898
C 341	INSTR PANEL LH-HEAT MIRROR SW	EATON	8	------	562763
C 342	ENGINE RR START SW	DEUTSCH	2	562586	562585
C 343	INSTR PANEL LH-HEADLAMP SW	EATON	8	------	562763
C 344	INSTR PANEL LH-HAZARD LT SW	EATON	8	------	562763
C 345	INSTR PANEL LH-FOG LT SW	EATON	8	------	562763
C 346					
C 347	INSTR PANEL LH-DASH LT SW	AMP MNL	2	560900	560898
C 348	INSTR PANEL CENT-RACOR MODULE	MOLEX	6	562070	562067
C 349					
C 350	RH CONSOLE-THERMOMETER	AMP MNL	3	561667	561550
C 351	LH HAT RACK-FLUOR 110V	MOLEX	4	561477	561476
C 352	RH CONSOLE-DRV TEMP SENSOR	BURNDY	4	------	561104
C 353	INSTR PANEL RH-DRV FAN RHEOST	AMP MNL	6	561552	561515
C 354	INSTR PANEL RH-DRV TEMP CTR	AMP MNL	6	561552	561515
C 355	INSTR PANEL RH-FR TEMP CTR	AMP MNL	3	561667	561550
C 356					
C 357	INSTR PANEL RH-WATER TEMP GA	AMP MNL	3	561667	561550
C 358	INSTR PANEL RH-FUEL LEVEL GA	AMP MNL	3	561667	561550
C 359					
C 360					
C 361	FR ROOF-WIPER MOTOR	AMP FF	6	------	561186
C 362	FR ROOF-LAVATORY OCCUPIED LT	AMP MNL	2	561248	561247
C 363	FR ROOF-WATCH YOUR STEP LT	AMP MNL	2	561248	561247
C 364	FR ROOF-DESTINATION SIGN	AMP MNL	3	561667	561550
C 365	FR ROOF-UP WINDSHIELD DEFROST	AMP MNL	3	561667	561550
C 366	RH DASH PANEL-GRN & RED LEDS	AMP MNL	3	560908	562006
C 367	ENGINE COMPT-DIF OIL T SENSOR	PED WP	2	561566	561690
C 368	FR ROOF-DEST. SIGN BALLAST	AMP MNL	3	561667	561550
C 369	FR ROOF-DEST. SIGN OPER. SW	TORRIX	5	------	562110
C 370	FR ROOF-DEST. SIGN FLUOR.	AMP MNL	2	560900	560898
C 371	FR ROOF-DEST. SIGN FLUOR.	AMP MNL	2	560900	560898
C 372	FR ROOF-DEST. SIGN SPEED SW	MOLEX	4	561477	561476
C 373	FR ROOF-NO SMOKING LT	AMP MNL	2	561248	561247
C 374	LH SWITCH PANEL	AMP MNL	6	561552	561515
C 375					
C 376					
C 377	LH DASH PANEL-STOP ENG.OVERIDE SW	EATON	8	------	562763
C 378					
C 379					
C 380	LH CONSOLE-DDR CONNECTOR	DEUTSCH	6	562360	------
C 381					
C 382					
C 383					
C 384					
C 385	EVAPOTATOR COMP WATER PUMP	PED WP	2	561566	561690

CONNECTORS CODE

NO	LOCATION	TYPE	CAVITY	#PIN HOUSING	#SOCKET HOUSING
C 386	LH DASH PANEL-WCL POWER SYSTEM SW	EATON	8	------	562763
C 387	RR JCT BOX (WCL)	AMP MNL	9	561661	561662
C 388	RR JCT BOX (WCL)	AMP MNL	12	561735	561734
C 389	WCL REAR DOOR	MOLEX	4	561477	561476
C 390	LAVATORY WALL-WCL REMOTE CTR	EATON	8	------	562763
C 391	LAVATORY WALL-WCL LAMP	EATON	8	------	562763
C 392	LAVATORY WALL-WCL SW. LT.	EATON	2	------	561835
C 393	LAVATORY WALL-WCL REMOTE SYS.	AMP CPC	4	561686	561687
C 394	UNDER INSTR. PANEL- B/U MONITOR	AMP MNL	4	560851	560852
C 395	DRIVER'S COMPT. - B/U MONITOR	AMP	5	------	------
C 396	FR SECT. LH HAT RACK-SPEAKER	MOLEX	4	562507	562503
C 397	ENGINE COMPT. CRADLE ACC.	DEUTSCH	40	562281	562284
C 398					
C 399	ENGINE COMPT. – PRE-EXITATION ALT.	PED WP	2	561566	561690
C 400	ENGINE COMPT. BLOCK HEATER	PED MP	3	561781	561782
C 401					
C 402					
C 403	GALLEY FRIGO NORCOLD	AMP MNL	2	561248	561247
C 404	GALLEY LAMP	AMP MNL	2	561248	561247
C 405	LAST LUGGAGE COMP.- INVERTER SIGNAL	AMP MNL	2	561248	561247
C 406	FR JCT BOX COMPT.-ABS	AMP MNL	2	560900	560898
C 407					
C 408					
C 409	ENGINE CPT -LOW COOL. LEVEL	PED MP	2	------	562350
C 410	FR JCT BOX-DIODE CONNECTOR	AMP MNL	15	561987	561986
C 411	FR JCT BOX-DIODE CONNECTOR	AMP MNL	15	561987	561986
C 412	LH DASH PANEL-MASTER SWITCH SW	EATON	8	------	562763
C 413	ENG CPT-A/C HI UNLOAD PRS SW	PED WP	2	561566	561690
C 414					
C 415	RR JCT BOX – ENGINE SIGNAL	DEUTSCH	24	562280	562283
C 416	ENGINE CRADLE-ENGINE SIGNAL	FCI	10	563207	------
C 417	FRONT JCT BOX-DIODES	AMP MNL	15	561987	561986
C 418	LH DASH PANEL-HTR WINDSH.SW	EATON	8	------	562763
C 419	FR JCT BOX-RETARDER OR JACOB	AMP MNL	3	561667	561550
C 420					
C 421					
C 422					
C 423					
C 424	UNDER INSTRUMENT PANEL CENTER	AMP MNL	3	561667	561550
C 425	FR JCT BOX-DIODES	AMP MNL	15	561987	561986
C 426	ENGINE COMPT. CLUTCH CTR FAN	PED WP	3	561781	561782
C 427	PRO-HEAT	PED-WP	2	561566	561680
C 428	PRO-HEAT	PED WP	6	561606	561607
C 429	FR JCT BOX COMPT.	AMP MNL	6	561552	561515
C 430	LH CONSOLE-TIMER	AMP FF	8	561188	562363
C 431	LH CONSOLE-PRE HEAT.	TAB AMP	1	561540	561539
C 432	ENGINE CPT.-PROX. SW. DOOR AJAR	PED-WP	2	561566	561680
C 433	FR SERVICE CPT. KNEEL. PRESS. SW	PED WP	2	561566	561690
C 434	FRONT JCT. BOX-DIODES	AMP MNL	15	561987	561986
C 435	FR SERVICE CPT.(RH) KNEEL. PIEZO	AMP MNL	2	560900	560898
C 436	RH HAT RACK-WCL CENTER ROOF ACC	AMP CPC	16	561639	561640
C 437	RH HAT RACK-WCL FR & RR SECT.	AMP CPC	24	561642	561643
C 438	EVAP CMPT- A/C CONTROL	AMP MNL	2	561248	561247
C 439	EVAP CMPT- A/C CONTROL	AMP MNL	2	561248	561247
C 440	EVAP CMPT- A/C CONTROL	DEUTSCH	4	562479	562477
C 441	FR JCT BOX- DIODES	AMP MNL	15	561987	561986
C 442					
C 443					
C 444					
C 445					
C 446					
C 447					
C 448					
C 449					
C 450	SOUND SYS. JCT. PANEL	MOLEX	4	562507	562503
C 451	WIRELESS MICRO-FIRST CPT BAG	MOLEX	2	562550	562549
C 452	UNDER DASH INSTR. PANEL	MOLEX	2	562550	562549

NO	LOCATION	TYPE	CAVITY	#PIN HOUSING	#SOCKET HOUSING
C 453	SOUND SYS. JCT.PANEL-VCP	PED WP	2	561566	561680
C 454	SOUND SYS.JCT.PAN.-FILT. VCP	PED WP	2	561566	561680
C 455	WIRELESS MICRO-LH HAT-RACK	MOLEX	6	------	562464
C 456	WORLD TRANSM.-RETARDER ACCUM.	PED MP	2	------	562427
C 457	WORLD TRANSM.-MAIN CONNECTOR	DEUTSCH	31	562572	562536
C 458	WORLD TRANSM.-TURBINE SP.SENS	PED MP	2	------	562426
C 459	WORLD TRANSM.-ENGINE SP.SENS.	PED MP	2	------	562426
C 460	WORLD TRANSM.-SPEED SENSOR	ITT	2	------	562541
C 461	WORLD TRANSM.-RETARDER TEMP.	PED MP	2	561566	561680
C 462	WORLD TRANSM.-RETARD SOL."K"	PED MP	2	------	562426
C 463	WORLD TRANSM.-SENSOR CONN.	DEUTSCH	16	562570	562571
C 464	RR JCT BOX-DDR CONNECTOR	DEUTSCH	6	------	562360
C 465	LH CONSOLE-SHIFTER SELECTOR	PED	20	------	562825
C 466	FR SERVICE CPT.-RESIS. MOD.	PED WP	3	------	562428
C 467	FR SERVICE CPT.-RESIS. MOD.	PED WP	3	------	562428
C 468			8		
C 469					
C 470	FR LH UPPER WHELL CPT-SILENT 1000	AMP MNL	2	561248	561247
C 471	FR LH UPPER WHELL CPT-SILENT 1000	AMP MNL	2	561248	561247
C 472	FR LH UPPER WHELL CPT-SILENT 1000	PED WP	2	561566	561690
C 473	FR LH UPPER WHELL CPT-SILENT 1000	AMP MNL	3	561667	561550
C 474	DRIVER CPT.-TEMP. SENSOR	AMP MNL	2	561247	561248
C 475	RR JCT BOX-SPEED SIGN CONNECTOR	DEUTSCH	2	562486	562485
C 476					
C 477					
C 478	ELECTRONIC DESTINATION SIGN	AMP CPC	9	561636	561637
C 479	HVAC MODULE	MOLEX	3		562783
C 480	UNDER DASH LH-DR. FAN SPEED CTR. MOD	PED	4	561889	561890
C 481	UNDER DASH LH-DR. FAN SPEED CTR. MOD	PED	3	561781	561782
C 482					
C 483	FR SERVICE CPT. (NOT USED)	PED PC	2	------	562237
C 484	UNDER DASH LH.-FOOT DAMPER MOTOR	PED PC	2	------	562076
C 485	UNDER DASH LH.-DASH & DEFR. DAM.MOT.	AMP MNL	3	561667	561550
C 486					
C 487	S.S.PANEL – AUDIO IN AMPLI	MOLEX	4	------	563071
C 488	S.S.PANEL – AMPLI SIGNAL	MOLEX	8	------	562465
C 489	S.S.PANEL – SPEAKER OUTLET	MOLEX	6	------	562464
C 490					
C 491					
C 492					
C 493					
C 494					
C 495					
C 496					
C 497					
C 498					
C 499					
C 500	FR LH UPPER WHELL CPT -PRODRIVER	MOLEX	6	562070	562069
C 501	FR LH UPPER WHELL CPT -PRODRIVER	PED MP	7	562433	------
C 502	LH DASH PANEL-PRE HEATER SW.	EATON	8	------	562763
C 503	LH CONSOLE-PRE HEATER SW.	EATON	2	------	561837
C 504	LH CONSOLE WEBASTO TIMER	AMP	8	------	562852
C 505	LH CONSOLE ESPAR TIMER	AMP	9	------	562681
C 506	FR JCT BOX CPT. DIGITAL CLOCK	AMP	4	561685	561687
C 507	FR SECT. LH HAT-RACK DIG. CLOCK	MOLEX	4	561477	561476
C 508	RR JCT BOX-FAN CLUTCH RETARDER	AMP MNL	6	561552	561515
C 509	FR LH UPPER WHELL CPT -DATA LOGGER	PED MP	16	------	562530
C 510	FR LH UPPER WHELL CPT -DATA LOGGER	DEUTSCH	9	562531	------
C 511	FR LH UPPER WHELL CPT -DATA LOGGER	PED MP	4	562532	------
C 512	FR LH UPPER WHELL CPT -DATA LOGGER	PED MP	10	562533	------
C 513	FR LH UPPER WHELL CPT -DATA LOGGER	AMP MNL	3	561667	561550
C 514	FR LH UPPER WHELL CPT -DATA LOGGER	PED MP	6	562433	562417
C 515	FR JCT BOX CPT.-INTERCOM	MOLEX	4	561477	561476
C 516	FR JCT BOX CPT.-INTERCOM	MOLEX	6	562070	562069
C 517	LAVATORY WALL-INTERCOM	MOLEX	6	562070	562069
C 519	UNDER DASH RH-SEDAN DOOR	HUMPHREY	2	------	562580
C 520	UNDER DASH RH-SEDAN DOOR	HUMPHREY	2	------	641385

CONNECTORS CODE

NO	LOCATION	TYPE	CAVITY	#PIN HOUSING	#SOCKET HOUSING
C 521	UNDER DASH RH-SEDAN DOOR	HUMPHREY	2	------	641385
C 522					
C 523	FR JCT BOX-FUSE BLOCK	PED	8	562647	562646
C 524	FR JCT BOX-FUSE BLOCK	PED	8	562647	562646
C 525	FR JCT BOX-FUSE BLOCK	PED	8	562647	562646
C 526	FR JCT BOX-FUSE BLOCK	PED	8	562647	562646
C 527	FR JCT BOX-FUSE BLOCK	PED	8	562647	562646
C 528	FR JCT BOX-FUSE BLOCK	PED	8	562647	562646
C 529	FR JCT BOX-12V OUTLET	AMP MNL	2	561247	561248
C 530	RR JCT BOX-FUSE BLOCK	PED	8	562647	562646
C 531	RR JCT BOX-FUSE BLOCK	PED	8	562610	---
C 532	RR JCT BOX-FUSE BLOCK	PED	8	562610	---
C 533	RR JCT BOX-FUSE BLOCK	PED	8	562647	562646
C 534	RR JCT BOX-FUSE BLOCK	PED	8	562647	562646
C 535	RR JCT BOX-FIRE MODULE DETECT.	AMP MNL	3	561667	561550
C 536	UNDER DASH RH-DRIVER'S HTR TEMP. CTR	AMP MNL	6	561552	561515
C 537	BATT. CPT.-A/C PRESS. SIGN. RLY	AMP MNL	2	561248	561247
C 538	FR SERVICE CPT.-OUTSIDE TEMP. SENSOR	AMP MNL	2	561248	561247
C 539	HVAC DASH MODULE OUTPUT CON	MOLEX	24		562780
C 540	HVAC DASH MODULE INPUT CON	MOLEX	22		562781
C 541	SOUND SYS. JCT PANEL-AUDIO SEAT SYS.	PED WP	2	561566	561690
C 542	LH HAT RACK-AUDIO SEAT SYSTEM	AMP MNL	3	561667	561550
C 543					
C 544	SOUND SYS JCT PANEL-AUDIO SEAT SYS.	PED WP	3	561781	562428
C 545	LH HAT RACK-AUDIO SEAT SYSTEM	AMP MNL	3	561667	561550
C 546	WIRELESS MIC. CHARGING SYSTEM	MOLEX	2	--------	563025
C 547	RH DASH PANEL-ACCESSORIES	AMP CPC	37	561645	561646
C 548	LH DASH PANEL-T.T. LT. TEST SW.	EATON	8	------	562763
C 549	LH DASH PANEL-FAN CLUTCH OVERR. SW	EATON	8	------	562763
C 550	LAST LUGG. CPT. -WCL RICON	AMP CPC	16	561694	561695
C 551	LAST LUGG. CPT. -WCL RICON	AMP CPC	16	561694	561695
C 552	LAST LUGG. CPT. -WCL RICON	AMP CPC	9	561636	561637
C 553	UNDER DASH R.H. - CONTROL. HEAD	MOLEX	16	--------	562559
C 554	UNDER DASH R.H. - CONTROL. HEAD	MOLEX	16	--------	562559
C 555	UNDER DASH R.H. - CONTROL. HEAD	MOLEX	16	--------	562559
C 556	UNDER DASH R.H. - RADIO ACC.	MOLEX	2	562550	562549
C 557	UNDER DASH R.H. - RADIO ACC.	MOLEX	9	562556	562555
C 558	UNDER DASH R.H. - RADIO ACC.	MOLEX	4	562507	562503
C 559	SOUND SYS. JCT. PANEL – FILTER AMPLI	PED WP	2	561566	561690
C 560	SOUND SYS. JCT. PANEL – POWER AMPLI	MOLEX	4	562507	562503
C 561	L.H. HAT RACK - WIRELESS MICRO	MOLEX	8		562465
C 562	L.H. HAT RACK - VCP	MOLEX	12	562556	563070
C 563	L.H MODESTY PANEL - DRIVERS SPK.	MOLEX	4	562507	562503
C 564	L.H MODESTY PANEL - MICRO	MOLEX	4	562507	562503
C 565	R.H MODESTY PANEL - MICRO	MOLEX	4	562507	562503
C 566	L.H. CONSOLE - BOOM MICRO	MOLEX	4	562507	562503
C 567	L.H. CONSOLE - DRIVERS MICRO	MOLEX	4	562507	562503
C 568	SOUND SYS. JCT. PANEL - PASS. SPK	CINCH	4	562553	562552
C 569	SOUND SYS. JCT. PANEL - POWER AMPLI.	MOLEX	9	562556	562555
C 570	UNDER DASH PANEL TTLT	MOLEX	6		562464
C 571	UNDER DASH PANEL TTLT	MOLEX	20		562778
C 572	UNDER DASH PANEL TTLT	MOLEX	18		562779
C 573	UNDER DASH PANEL TTLT	MOLEX	8		562465
C 574	HAT -RACK FLUOR. INDIRECT LIGHTING	MOLEX	6	----------	562759
C 575	HAT -RACK FLUOR. INSTATION LIGHT	MOLEX	4	562507	562503
C 576	HAT -RACK FLUOR. INDIRECT LIGHTING	AMP MNL	3	561667	561550
C 577	HAT -RACK FLUOR. INDIRECT LIGHTING	AMP MNL	3	561667	561550
C 578	HAT -RACK FLUOR. INSTATION LIGHT	MOLEX	4	562507	562503
C 579	L.H HAT RACK – VCP POWER	MOLEX	4		563071
C 580	RH DASH PANEL-HAT RACK FAN SW	EATON	8	--------	562763
C 581					
C 582	FRONT SERVICE CMPT. - WINDOWS AJAR	PED WP	2	561566	561690
C 583	L.H. DASH PANEL - MASTER KEY	DEUTSCH	2	562486	562485
C 584	FRONT SERVICE CMPT. - AIR HORH	HUMPHREY	3	--------	641385
C 585					
C 586					
C 587	LH PARCEL RACK DVD UNIT	MOLEX	4	563040	563071

NO	LOCATION	TYPE	CAVITY	#PIN HOUSING	#SOCKET HOUSING
C 588	FRONT SERVICE CPT. CENTER SOUND SYS.	CONNXALL	9	563163	563089
C 589	UNDER DASH - L.H. MIRROR	CONNXALL	9	563163	563089
C 590	UNDER DASH - R.H. MIRROR	AMP MNL	9	561670	561669
C 591	L.H.CONSOLE - MIRROR L.H.	EURAMTEC	8	--------	562799
C 592	L.H.CONSOLE - MIRROR R.H.	EURAMTEC	8	--------	562799
C 593	BATTERY CMPT. - CHARGER	PED WP	3	561781	561782
C 594	FRONT ROOF - DRIVERS LIGHT	LEEKRAFT		---------	562803
C 595	DASH CENTER MODULE - OPEN DOOR	MOLEX	4	561477	561476
C 596	DASH CENTER MODULE - CLOSE DOOR	MOLEX	4	561477	561476
C 597	L.H. DASH PANEL - DISPLAY SET SW.	MOLEX	5		562812
C 598	L.H. DASH PANEL - DISPLAY SET SW.	MOLEX	5		562812
C 599	UND.DASH-MAGN.SW.CTR POS. DR'S AIR	AMP MNL	2	561248	561247
C 600	ENGINE CPT.-A/C LOW PRESS SW. UNLOAD	PED	2	562348	562471
C 601	L.H. ROOF - WINDOW AJAR	AMP MNL	2	561248	561247
C 602	L.H. ROOF - WINDOW AJAR	MOLEX	4	561477	561476
C 603	R.H. ROOF - WINDOW AJAR	AMP MNL	2	561248	561247
C 604	LH PARCEL RACK DVD VIDEO STABILIZER	SWITCHCRAFT	1	563074	
C 605	HAT RACK - MOTOR FAN	PED	2	560997	561030
C 606	HAT RACK - MOTOR FAN	PED	2	560997	561030
C 607					
C 608	FRONT SERVICE CMPT. SPEED SIGNAL	PED WP	2	561566	561690
C 609	LAVATORY - NIGHT LIGHT				
C 610					
C 611	HAT RACK READING LTS RICON	MOLEX	6	562558	562557
C 612	HAT -RACK FLUOR. INSTATION LTS RICON	MOLEX	4	562507	562503
C 613	HAT -RACK INDIRECT LTS RICON	AMP MNL	3	561667	561550
C 614	HAT -RACK INDIRECT LTS RICON	AMP MNL	3	561667	561550
C 615	LH PARCEL RACK DVD SING ALONG ADAPT.	MOLEX	2	562550	562549
C 616					
C 701	ZF TRANSMISSION ECU	KOSTAL	20		
C 702	SHIFT SELECTOR – LH CONSOLE	AMP	14		563338
C 712	NEUTRAL SWITCH ON ZF TRANSM. (TOP)	AMP	4		563340
C 714	OUTPUT SENSOR ON ZF TRANSM. (BOTTOM)	AMP	4		563340
C 717	BATT. CPT - MAIN CONNECTOR	AMP CPC	22	561642	561643
C 720	ENGINE COMPT – BLKHD CONNECTOR	DEUTSCH	31	563359	563358
C 721	LH CONSOLE – ZF TESTMAN DIAGNOSTIC	AMP MNL	6	563356	
C 723	ENGINE COMPT – FOR TRANSM.	DEUTSCH	3		562884
C 736	ENGINE COMPT – ZMTEC MODULE	PACKARD	30	563053	
C 740	DRIVE AXLE – EASY START SOL VALVE	LEONI	2	--	641949
C 742	BATT. CPT – FUSE BLOCK	AMP	8	562446	
C 745	FR SERV.COMPT – THROTTLE POS. SENSOR	PED WP	3	561781	
C 760	FR SERV. COMPT – TO J1939	DEUTSCH	3		
C 761	FR SERV. COMPT – TO J1939	DEUTSCH	3		562884
C 762	ENGINE COMPT – TO J1939	DEUTSCH	3		562884
C 763	ENGINE COMPT – TO J1939	DEUTSCH	3		562884
C 764	ENGINE COMPT – TO J1939	DEUTSCH	3		562884
C 765	ENGINE COMPT – TO J1939	DEUTSCH	3		562884
C 766	ENGINE COMPT – TO J1939	DEUTSCH	3		562884
C X	CLUSTER	JAE	22		562766
C Y	CLUSTER	JAE	30		562767
L X	CLUSTER	JAE	22		562764
L					
R					

CONNECTORS CODE

NO	LOCATION	TYPE	CAVITY	#PIN HOUSING	#SOCKET HOUSING
AA1	BEHIND DASH - SONALERT	BOSCH	5		561183
AA2	BEHIND DASH - SONALERT	BOSCH	5		561183
C X1	FR SERVICE COMPT- ECU ABS	AMP	15		563200
C X2	FR SERVICE COMPT- ECU ABS	AMP	18		563201
C RXTX	HVAC DASN MODULE COMMUNICATION	MOLEX	3	563206	562873
C S	RR JCT BOX ECU WORLD TR.	PED	32		562817
C T	RR JCT BOX ECU WORLD TR.	PED	32		562824
C TCI	ENGINE CPT – DDEC V TURBO TEMP.	FCI	2		563404
C V	RR JCT BOX ECU WORLD TR.	PED	32		562823
C WX1	ENGINE CPT-WEBASTO PRE-HEAT WATER	AMP SEALED	7		563135
C WX3	ENGINE CPT-WEBASTO PRE-HEAT WATER	AMP SEALED	7	563134	
C Y	CLUSTER	JAE	30	---	562765
C 1	FR JCT BOX COMPARTMENT	AMP CPC	14	561585	561584
C 2	FR JCT BOX COMPARTMENT	AMP CPC	16	561639	561640
C 3	FR JCT BOX COMPARTMENT	AMP CPC	24	561641	561643
C 4	FR JCT BOX COMPARTMENT	AMP CPC	37	561644	561646
C 5	FR SERVICE COMPT.-UNDERNEATH	AMP CPC	37	561644	561646
C 6	FR SERVICE COMPT.-UNDERNEATH	AMP CPC	16	561639	561640
C 7					
C 8	FR SERVICE COMPT.-UNDERNEATH	AMP CPC	24	561641	561643
C 9	FR SERVICE COMPT.-UNDERNEATH	AMP CPC	24	561641	561643
C 10	LUGGAGE COMPT. WATER BOOSTER PUMP	PED	2	562348	562471
C 11	FR SERVICE COMPARTMENT	AMP CPC	37	561644	561646
C 12	FR SERVICE COMPARTMENT	AMP CPC	16	561639	561640
C 13	LH CONSOLE-CTR MIRROR	AMP MNL	6	561552	561515
C 14	UNDER DASH-LH MIRROR	AMP MNL	9	561661	561662
C 15	A/C CLUTCH	PED WP	2	561566	561690
C 16	LH CONSOLE SW-CRUISE ON OFF	EATON	10	------	562763
C 17	LH CONSOLE SW-CRUISE RESUME	EATON	10	------	562763
C 18	LH CONSOLE SW-CRUISE SET	EATON	10	------	562763
C 19	LH CONSOLE DECEL SW	EATON	10	------	562763
C 20	RR JCT BOX	DEUTSCH	70	562282	562285
C 21	RR JCT BOX	DEUTSCH	24	562280	562283
C 22	RR JCT BOX - EATON TRANSM.	AMP MNL	6	561552	561515
C 23					
C 24					
C 25					
C 26	HYD & MAN TRANSM.-NEUT.& B/U	PED WP	4	561610	561611
C 27	HYD & MAN TRANSM.-SPEED SENS.	PED WP	2	561566	561690
C 28	EATON TRANSMISSION	DEUTCH	3	562877	562884
C 29	EATON TRANSMISSION	PED MP	6	562878	------
C 30	RR JCT BOX - ECU EATON TRANSM.	PED MP	32	------	562866
C 31	RR JCT BOX - ECU EATON TRANSM.	PED MP	24	------	562865
C 32	DDEC ENGINE-ECM	AMP	68	------	563403
C 33	RR JCT BOX - EATON TRANSM.	DEUTCH	9	562531	------
C 34	RH. CONSOLE - EATON TRANSM. SHIFTER	PED MP	3	------	562871
C 35	RR JCT BOX	DEUTCH	40	562281	562284
C 36	RH. CONSOLE - EATON TRANSM. SHIFTER	PED MP	24	------	562874
C 37	RR SECTION-LH HAT RACK	MOLEX	6	562558	562557
C 38	RR SECTION-RH HAT RACK	MOLEX	6	562558	562557
C 39	LH CONSOLE - EATON TRANSM. DISPLAY	AMP MNL	4	561551	561668
C 40	RR JCT BOX - EATON TRANSM. J1939	DEUTCH	3	562877	562884
C 41	LAVATORY ROOF LIGHT	LEECRAFT	2	-----	562803
C 42	LAVATORY BACK WALL-WTR TANK	AMP MNL	2	560900	560898
C 43	LAVATORY BACK WALL-ACCES.	AMP MNL	9	561661	561662
C 44	EATON TRANSM. J1939	DEUTCH	3	562877	562884
C 45	FR JCT BOX COMPARTMENT	AMP CPC	24	561642	561643
C 46	EATON TRANSM. J1939	DEUTCH	3	562877	562884
C 47	FR SERVICE COMPARTMENT	AMP CPC	16	561694	561695
C 48	FR. SERVICE CMPT.PRESS SW PARKBREAK	PED WP	2	561566	561690
C 49	BATTERIE COMPT.-LT	AMP MNL	2	561248	561247
C 50	FR SERVICE COMPT.-LOW BUOY	PED WP	1	561605	561577
C 51					
C 52	RR JCT BOX	AMP CPC	24	561642	561643
C 53	SPARE TIRE COMPT ENTRANCE STEP LIGHT	DEUTCH	2	562486	562485
C 54	SPARE TIRE COMPT ENTRANCE STEP LIGHT	DEUTCH	2	562486	562485
C 55	RH SWITCH PANEL	AMP CPC	9	561636	561637

NO	LOCATION	TYPE	CAVITY	#PIN HOUSING	#SOCKET HOUSING
C 56	HAT RACK- MOTOR FAN	MOLEX	6	562558	562557
C 57	HAT RACK- MOTOR FAN	MOLEX	6	562558	562557
C 58	RR JCT BOX AC PANEL	DEUTSCH	24	562280	562283
C 59	RR JCT BOX AC PANEL	AMP CPC	14	561584	561583
C 60	RR JCT BOX COMPT.-LT	AMP MNL	2	561248	561247
C 61	LUGGAGE COMPARTMENT LTS	AMP MNL	2	561248	561247
C 62	LUGGAGE COMPARTMENT LTS	AMP MNL	2	561248	561247
C 63	LUGGAGE COMPARTMENT LTS	AMP MNL	2	561248	561247
C 64	LUGGAGE COMPARTMENT LTS	AMP MNL	2	561248	561247
C 65	LUGGAGE COMPARTMENT LTS	AMP MNL	2	561248	561247
C 66	LUGGAGE COMPARTMENT LTS	AMP MNL	2	561248	561247
C 67	LUGGAGE COMPARTMENT LTS	AMP MNL	2	561248	561247
C 68	LUGGAGE COMPARTMENT LTS	AMP MNL	2	561248	561247
C 69	RR AXLE ACC-INSIDE PVC END	PED WP	6	561568	561578
C 70	LH CONSOLE	AMP CPC	16	561642	561643
C 71	FR JCT BOX COMPARTMENT	AMP CPC	37	561645	561646
C 72	FR JCT BOX COMPARTMENT	AMP CPC	24	561642	561643
C 73	DASH CENTER PANEL	AMP CPC	16	561639	561640
C 74	FR JCT BOX COMPARTMENT	AMP CPC	37	561645	561646
C 75	SERV CPT. RXT. ENT. DOOR SW	DEUTSCH	4	562479	562477
C 76	LUGGAGE COMPT.-AIR RET.SENS.	AMP MNL	2	561248	561247
C 77	LUGGAGE COMPT.-AIR RET.SENS.	AMP MNL	2	561248	561247
C 78					
C 79					
C 80	LUGGAGE COMPT.-AIR RET.SENS.	AMP MNL	2	561248	561247
C 81	PASSENGER COMPT.-AISLE LTS	AMP MNL	2	560900	560898
C 82	ENTRANCE DOOR	MOLEX	6	562070	562069
C 83	ENTRANCE DOOR-PROIMITY SW	MOLEX	4	561477	561476
C 84	ENTRANCE DOOR-PRESSURE SW	PED WP	2	561566	561690
C 85	UNDER INSTRUMENT PANEL LH	AMP MTA-100	------	562248	------
C 86					
C 87	RR END ROOF	AMP CPC	9	561636	561637
C 88	FR. SERVICE CMPT.PRESS SW PARK BRAKE	PED WP	2	561566	561690
C 89	RR END ROOF-B/U NONITOR	AMP CPC	4	561582	561581
C 90	RR JCT BOX	AMP CPC	15	561987	561986
C 91	RR JCT BOX	AMP CPC	37	561714	561713
C 92	FR LH UPPER WHELL CPT-ABS	AMP CPC	9	561635	561637
C 93	FR LH UPPER WHELL CPT-ABS		35	------	641094
C 94	RH CONSOLE ENTRANCE STEP LIGHT	DEUTCH	2	562486	562485
C 95	CONDENSOR CPT - LIQ. SOL. VALVE	PED WP	2	561566	561690
C 96	FR AXLE ACCESSORIES	AMP CPC	14	561585	561585
C 97	RR AXLE ACC-INSIDE PVC END	PED WP	6	561568	561578
C 98	FR SERVICE COMPT-EL.FT.PEDAL	PED WP	3	561782	561781
C 99	FR SERVICE COMPT LTS	AMP MNL	2	561248	561247
C 100	LH CONSOLE – 120 VOLTS SWITCH	EATON	8	------	562763
C 101	FR SERVICE COMPT-ELEC. HORNS	PED WP	2	561566	561690
C 102	SIDE (LH/FR & CENTER) DIR. LTS	GROTE	2	------	562155
C 103	SIDE (LH/FR & CENTER) MARKER LTS	GROTE	2	------	562155
C 104	SIDE (RH/FR & CENTER) DIR. LTS	DEUTSCH	4	562479	562477
C 104	FR SERV & SIDE CPT-FLASH. RH	GROTE	2	------	562155
C 105	FR SERVICE COMPT-LIQ.S.VALVE	PED WP	2	561566	561690
C 106	FR SERVICE COMPT-WATER VALVE	PED WP	2	561566	561690
C 107					
C 108	FR SERVICE COMPT-KNEEL.SYS	PED WP	2	561566	561690
C 109	FR SERVICE COMPT-KNEEL.SYS	PED WP	2	561566	561690
C 110	FR SERVICE COMPT-KNEEL.SYS	PED WP	2	561566	561690
C 111	EVAPORATOR COMPT-DAMPER	DEUTSCH	2	562486	562485
C 112	LAVATORY BACK WALL-FLUSH PUMP SW.	DEUTSCH	4	562479	562477
C 113	SIDE (LH/RR) MARKER LTS	GROTE	2	------	562155
C 114	SIDE (LH/RR) DIR LTS	GROTE	2	------	562155
C 115					
C 116	ENGINE COMPT. LTS	GROTE	2		563268
C 117	SIDE (RH/RR) MARKER LTS	GROTE	2	------	562155
C 117	FR SRV. COMPT. KNEELING UP SOL VALVE	PED WP	2	561761	
C 118	ENGINE COMPT-LAVATORY FAN	PED WP	2	561566	561690
C 119	ENGINE CPT RR DOOR RH LO LAMP	PED WP	6	561606	561607
C 120	ENGINE CPT RR DOOR LH LO LAMP	PED WP	6	561606	561607

CONNECTORS CODE

NO	LOCATION	TYPE	CAVITY	#PIN HOUSING	#SOCKET HOUSING
C 121	SIDE (RH/RR) DIR. LTS	GROTE	2	------	562155
C 122					
C 123	TAG AXLE-UNLOAD TAG RH VALVE	PED WP	2	561566	561690
C 124	ENGINE CPT-ETHER SW	PED WP	2	561566	561690
C 125	ENGINE CPT-B/U ALARM	PED WP	2	561566	561690
C 126	ENGINE CPT-FLUSHING PUMP	PED WP	2	561566	561690
C 127	ENGINE CPT-FUEL FILTER	PED WP	2	561566	561690
C 128	ENGINE CPT-A/C COMPR.CLUTCH	ITT SS	2	561813	561812
C 129					
C 130	ENGINE CPT-UNLOADER	ITT SS	2	561813	561812
C 131	ENGINE CPT-UNLOADER	ITT SS	2	561813	561812
C 132	ENGINE CPT-A/C LO PRESS SW	PED WP	2	561566	561690
C 133	ENGINE CPT-A/C HI PRESS SW	PED WP	2	561566	561690
C 134	FR JCT BOX-LUGGAGE DIODE CON.	AMP MNL	15	561987	561986
C 135	FR JCT BOX-LUGGAGE DIODE CON.	AMP MNL	15	561987	561986
C 136	RR JCT BOX - A/C PANEL DIODE CONN.	AMP MNL	15	561987	561986
C 137	RR JCT BOX-TRANSMITTER	AMP MNL	2	560900	560898
C 138	RR JCT BOX-CONTROL MODULE	AMP HDP	15	------	562012
C 139	RR JCT BOX-LOGIC MODULE	AMP HDP	15	562011	------
C 140	HVAC DASH MODULE THERMOMETER	MOLEX	4		562782
C 141	INSTRUMENT PANEL LH UNLOAD TAG	AMP	2	561248	561247
C 142	LAVATORY DOOR WALL	AMP MNL	2	561248	561247
C 143					
C 144	UNDER LH SEAT-AISLE LTS	AMP MNL	4	560851	560852
C 145	RR JCT BOX CPT-RR SIDE LTS	AMP MNL	9	561670	561669
C 146	ENGINE CPT-MODULATOR VALVE	AMPHENOL	2	------	560412
C 147	BATT & RR J.B.CPT-DOCK.LTS	PED WP	2	561566	561690
C 148					
C 149	CONDENSER CPT-FAN MOTOR	ORDNANCE	3	562555	562001
C 150					
C 151	EVAPORATOR CPT-THERMOSTAT	ITT SS	2	561813	562159
C 152	CONDENSER CPT-FUEL GAUGE	PED WP	4	561610	561611
C 153	EVAPORATOR CPT-AIR AMB. SENS	AMP MNL	2	561248	561247
C 154	EVAPORATOR CPT-FRESH AIR SENS	ITT SS	2	561813	561812
C 155	EVAPORATOR CPT-WATER VALVE	PNEUMAC	4	563204	
C 156	EVAPOR. CPT-BYPASS WATER VAL.	PED WP	2	561566	561690
C 157					
C 158	CONDENSER CPT-A/C LO TEMP.	PED WP	2	561566	561690
C 159	CONDENSER CPT-A/C HI TEMP.	PED WP	2	561566	561690
C 160	FR AXLE-ABS RH SENSOR	WABCO	2	641132	------
C 161	FR AXLE-ABS RH VALVE	WABCO	3	------	641098
C 162	FR AXLE-ABS LH VALVE	WABCO	3	------	641098
C 163	FR AXLE-ABS LH SENSOR	WABCO	2	641132	------
C 164	RR AXLE-ABS LH SENSOR	WABCO	2	641132	------
C 165	RR AXLE-ABS LH VALVE	WABCO	3	------	641098
C 166	RR AXLE-ABS RH VALVE	WABCO	3	------	641098
C 167	RR AXLE-ABS RH SENSOR	DEUTSCH	2	641132	------
C 168	RR AXLE-ABS OPT ATC	PED WP	2	561566	561690
C 169	RR JCT BOX-SPEED SW	AMP HDP	15	------	562012
C 170	FR JCT BOX-FLASHER UNIT	TC	2	------	561940
C 171	LH CONSOLE	AMP CPC	24	561642	561643
C 172					
C 173					
C 174	UNDER DASH RH-HTR MODULE	AMP MNL	9	561670	561669
C 175	UNDER DASH RH-HTR MODULE	AMP MNL	9	561670	561669
C 176	UNDER DASH RH-WIPER PULSE	AMP FF	6	------	561186
C 177	UNDER DASH RH-WIPER MOTOR	AMP FF	6	------	561186
C 178	UNDER DASH RH-LH FAN	TC	2	561030	560997
C 179	UNDER DASH RH-RH FAN	TC	2	561030	560997
C 180	RR JCT BOX-DIODE CONNECTOR	AMP MNL	15	561987	561986
C 181	RR JCT BOX-DIODE CONNECTOR	AMP MNL	15	561987	561986
C 182					
C 183	FR SERVICE CPT-KNEELING PAN.	PED WP	4	561610	561611
C 184	FR SERVICE CPT-KNEELING SW	ITT SS	3	561111	561080
C 185					
C 186					
C 186M	RR JCT BOX CPT.-SPD SIGN. M.TR	PED WP	2	561566	561690

NO	LOCATION	TYPE	CAVITY	#PIN HOUSING	#SOCKET HOUSING
C 186W	RR JCT BOX CPT.-SPD SIGN. WT	PED WP	2	561566	561690
C 187	FR JCT BOX-RPM RESISTOR CON.	AMP MNL	6	561552	561515
C 188					
C 189	ENGINE CPT RR DOOR B/U LT	TRUCK-LITE	2	------	562755
C 190	ENGINE CPT RR DOOR TAIL/ STOP LT	SUPER SEAL	3		562601
C 191	ENGINE CPT RR DOOR RH TAIL/STOP LT	SUPER SEAL	3		562601
C 192	ENGINE CPT RR DOOR DIR. LT	SUPER SEAL	3		562601
C 193					
C 194					
C 195					
C 198	ENGINE CPT RR DOOR LICENCE LT	PED WP	2	562348	562471
C 199					
C 200	RH HAT RACK-FLUORESCENT	AMP MNL	2	561248	561247
C 201	RH HAT RACK-FLUORESCENT	AMP MNL	2	561248	561247
C 202	RH HAT RACK-INDIRECT LIGHTING	MOLEX	2	---------	562758
C 203	RH HAT RACK-INDIRECT LIGHTING	MOLEX	6	---------	562759
C 204	RH HAT RACK-GENERAL LT	AMP MNL	2	560900	560898
C 205	FR SECT.-RH HAT RACK SPEAKER	AMP MNL	9	561661	561662
C 206	RH HAT RACK-READING LT	AMP FF	4	----------	562756
C 207	LH HAT RACK-READING LT	AMP FF	4	----------	562756
C 208	LH HAT RACK-BALLAST	MOLEX	2	----------	562758
C 209	LH HAT RACK HOTESS CHIME	AMP MNL	3	561667	561550
C 210	FR SECT.-LH HAT RACK SPEAKER	AMP MNL	9	561661	561662
C 211	FR ROOF-STORE LH	AMP MNL	2	560900	560898
C 212	FR ROOF-STORE RH	AMP MNL	2	560900	560898
C 213					
C 214	ENGINE CPT J1922				
C 215	TAG AXLE - A.T.C. SYSTEM				
C 216	TAG AXLE - A.T.C. SYSTEM				
C 217	RH DASH PANEL-FRONT CAMERA SW	EATON	8	--------	562763
C 218	RH DASH PANEL-FRONT CAMERA SW	AMP MNL	2	560900	560898
C 219	ENGINE CMPT. – FIRE DETECTOR	DEUTSCH	2	562486	562485
C 220	RR.JCT.BOX-FUEL PRIME PUMP	TC	1	561070	561073
C 221	BATTERY CMPT. FIRE DETECTOR	DEUTSCH	2	562486	562485
C 222	ENGINE CMPT. FIRE DETCTOR	DEUTSCH	2	562486	562485
C 223	ENGINE CMPT. FIRE DETCTOR	DEUTSCH	2	562486	562485
C 224	ENGINE CMPT. -VORAD J1939	DEUTSCH	3	562877	562884
C 225	ENGINE CMPT. -VORAD J1939	DEUTSCH	3	562877	562884
C 226	FR LH UPPER WHEEL CPT-VORAD J1939	DEUTSCH	3	562677	562884
C 227					
C 228	ENG.CPT.- A/C COMPRESSOR	PED WP	2	561566	561690
C 229					
C 230	ENG.CPT.-FUEL PRIME PUMP FEED	DEUTSCH	2	562486	562485
C 231	ENG.CPT.-FUEL PRIME PUMP SW.	PED WP	2	561566	561690
C 232	ENG.CPT.-FUEL PRIME PUMP	PED WP	2	561566	561690
C 233	FR. SERVICE COMPT.	VDO	8		562043
C 234	FR. SERVICE COMPT.	VDO	8		562044
C 235	FR. SERVICE COMPT.	VDO	8		562041
C 236	LUGGAGE COMPARTEMENT	AMP MNL	4	560851	560852
C 237	UNDER DASH LH-JACOB CLUTCH SW	ITT SS	3	561111	561080
C 238	UNDER DASH LH-PASS. REC. DAMPER SW	EATON	8	------	562763
C 239	FR SERVICE CPT-HI BUOY VALVE	PED WP	2	561566	561690
C 240	FR SERVICE CPT-KNEEL PROX SW	PED WP	3	561781	562428
C 241	HEADLAMPS HI BEAM	HELLA	2		562623
C 242	HALOGEN HEAHLAMPS LO BEAM	HELLA	2		562623
C 242	XENON HEADLAMPS LO BEAM	DELPHI	2		563366
C 243	FRONT CAP- HEADLIGHTS MAIN CONN	DEUTCH	6	565131	562789
C 244	FR SERVICE CPT-LH FOG LAMP	DEUTCH	2	562902	562901
C 245	FR SERVICE CPT-RH FOG LAMP	DEUTCH	2	562902	562901
C 246	UNDER DASH - L.H. MIRROR	CONNXALL	5	563196	563090
C 247	HEADLAMPS MARK & DIR LTS	AMP SUPER S	3		562601
C 248	FR JCT BOX-WIPER PULSE GEN	AMP FF	6	------	561108
C 249					
C 250	LH CONSOL PANEL- LOW BOY	PED	2	561566	561690
C 251	LH DASH PANEL-FAST IDLE SW	EATON	8	------	562763
C 252					
C 253	LH DASH PANEL-ETHER SW	EATON	8	------	562763

CONNECTORS CODE

NO	LOCATION	TYPE	CAVITY	#PIN HOUSING	#SOCKET HOUSING
C 254	INST. PANEL RH-ENTR.DOOR SW.	TORRIX	5	------	562110
C 255	LH DASH PANEL-JACOB & RETARDER SW	EATON	8	------	562763
C 256					
C 257					
C 258	LH SW PANEL-MULTI FUNC. SW	AMP FF	8	561188	------
C 259	LH SW PANEL-MULTI FUNC. SW	AMP FF	6	------	561108
C 260	FR SERVICE CPT-LUG DOOR LCK	PED WP	6	561606	561607
C 261	UNDER DASH RH-DOOR MODULE	AMP MNL	9	561670	561669
C 262	UNDER DASH RH-DOOR MODULE	AMP MNL	4	561551	561668
C 263	UNDER DASH RH-DOOR MODULE	AMP MNL	3	561667	561550
C 264	UNDER DASH RH-DOOR MODULE	AMP MNL	3	561667	561550
C 265	UNDER DASH RH-DOOR MODULE	AMP HDP-20	15	562011	562012
C 266					
C 267	UNDER DASH RH	AMP CPC	24	561642	561643
C 268					
C 269	UNDER DASH - R.H. MIRROR	CONNXALL	5	563196	563090
C 270	LH MIRROR POST	MOLEX	6	562070	562069
C 271	RH MIRROR POST	MOLEX	6	562070	562069
C 272	LH MIRROR	SPARTAN	6	------	990158
C 273	RH MIRROR	SPARTAN	6	------	990158
C 274	RR. JCT. BOX – SIGNAL ALT. MODULE	AMP MNL	12	561735	561734
C 275	UNDER DASH RH-DOOR MODULE	AMP MNL	9	561670	561669
C 276	UNDER DASH RH-LOCK SOL.VALVE	AMP MNL	2	561248	561247
C 277					
C 278					
C 279 *	FR SERVICE CPT.- STEERING ZF	DEUTCH	2		562486
C 279	UNDER DASH CYLINDER READ SW.	AMP MNL	2	561248	561247
C 280	LH CONSOLE-UNLOAD TAG SW.	NGR	10	------	562763
C 281					
C 282					
C 283					
C 284	LH DR'S ROOF - MONITOR FEED	PED WP	3	561781	561782
C 285	LH DR'S ROOF – SOUND SYSTEM	AMP CPC	24	561642	561643
C 286	RH SW PANEL-A/C & HEAT	EATON	8	------	562763
C 287	ENGINE COMPT-LTS SW	PED WP	2	561566	561690
C 288	RH SW PANEL-FRESH AIR	EATON	8	------	562763
C 289					
C 290					
C 291					
C 292	LH PARCEL RACK VIDEO PANEL– MONITOR	MOLEX	4	563040	563071
C 293	LH PARCEL RACK VIDEO PAN. – RCA RELAY	AMP MNL	2	561248	561247
C 294	LH PARCEL RACK VIDEO PAN.– RCA RELAY	AMP MNL	2	561248	561247
C 295	LH PARCEL RACK VID. PANEL– AMPLI VIDEO	MOLEX	4	563040	563071
C 296	LH PARCEL RACK VIDEO PAN. – MICRO SIGNAL	MOLEX	4	562507	562503
C 297	INSTRUMENT PANEL RH -LTS	AMP MNL	2	560900	560898
C 298					
C 299	RH DASH PANEL SW-GALLEY	EATON	8	------	562763
C 300	FR SERVICE CPT.- LOW BEAM RESISTORS	PED WP	2	561566	561690
C 301					
C 302					
C 303					
C 304					
C 305					
C 306					
C 307					
C 308	LH CONSOLE SW-RHEOSTAT	TC	2	561030	560997
C 309					
C 310	LH DASH PANEL -LUG. DOOR LCK SW	EATON	8	------	562763
C 311	RH DASH PANEL -HOS & PAS CHIME SW	EATON	8	------	562763
C 312	RH DASH PANEL -READING LTS SW	EATON	8	------	562763
C 313	RH DASH PANEL -GEN & FLUOR LTS SW	EATON	8	------	562763
C 314	LH DASH PANEL-FR DEST. SIGN SW	EATON	8	------	562763
C 315	LH DASH PANEL-LH STORE SW	EATON	8	------	562763
C 316	LH CONSOLE SPARE SWITCH	EATON	8	------	562763
C 317	LH DASH PANEL-RH STORE SW	EATON	8	------	562763
C 318	LH CONSOLE SW-DRV WINDOW LIFT	EATON	8	------	562763
C 319					

NO	LOCATION	TYPE	CAVITY	#PIN HOUSING	#SOCKET HOUSING
C 320	RH DASH PANEL-DRIVER'S LTS SW	EATON	8	------	562763
C 321	READING LTS TEST				
C 322	LH CONSOLE DRV WIND LIFT MOT	PED PO	2	------	561848
C 323	LH CONSOLE CRUISE CTR SW PAN. AMP	CPC	9	561636	561637
C 324					
C 325	LH DASH PANEL-KNEELING SW	EATON	8	------	562763
C 326	ENGINE CMPT.	PED	4	------	561610
C 327	ENGINE CONTROL	DEUTSCH	6	562583	562581
C 328	GALLEY-LAMP	AMP MNL	2	561248	561247
C 329	ENGINE TACHO SIGNAL	PED WP	3	561781	561789
C 330					
C 331	GALLEY MICROWAVE SW	EATON	8	------	562763
C 332					
C 333	GALLEY RH CONTAINER SW	EATON	8	------	562763
C 334	GALLEY LH CONTAINER SW	EATON	8	------	562763
C 335					
C 336					
C 337	INSTR PANEL LH-UP WIPER SW	EATON	8	------	562763
C 338	INSTR PANEL LH-UP DEFROST SW	EATON	8	------	562763
C 339	INSTR PANEL LH-UP WASHER SW	EATON	8	------	562763
C 340	FR JCT. BOX FIRE PIEZO ALARM	AMP MNL	2	560900	560898
C 341	INSTR PANEL LH-HEAT MIRROR SW	EATON	8	------	562763
C 342	ENGINE RR START SW	DEUTSCH	2	562586	562585
C 343	INSTR PANEL LH-HEADLAMP SW	EATON	8	------	562763
C 344	INSTR PANEL LH-HAZARD LT SW	EATON	8	------	562763
C 345	INSTR PANEL LH-FOG LT SW	EATON	8	------	562763
C 346					
C 347	INSTR PANEL LH-DASH LT SW	AMP MNL	2	560900	560898
C 348	INSTR PANEL CENT-RACOR MODULE	MOLEX	6	562070	562067
C 349					
C 350	RH CONSOLE-THERMOMETER	AMP MNL	3	561667	561550
C 351	LH HAT RACK-FLUOR 110V	MOLEX	4	561477	561476
C 352	RH CONSOLE-DRV TEMP SENSOR	BURNDY	4	------	561104
C 353	INSTR PANEL RH-DRV FAN RHEOST	AMP MNL	6	561552	561515
C 354	INSTR PANEL RH-DRV TEMP CTR	AMP MNL	6	561552	561515
C 355	INSTR PANEL RH-FR TEMP CTR	AMP MNL	3	561667	561550
C 356					
C 357	INSTR PANEL RH-WATER TEMP GA	AMP MNL	3	561667	561550
C 358	INSTR PANEL RH-FUEL LEVEL GA	AMP MNL	3	561667	561550
C 359					
C 360					
C 361	FR ROOF-WIPER MOTOR	AMP FF	6	------	561186
C 362	FR ROOF-LAVATORY OCCUPIED LT	AMP MNL	2	561248	561247
C 363	FR ROOF-WATCH YOUR STEP LT	AMP MNL	2	561248	561247
C 364	FR ROOF-DESTINATION SIGN	AMP MNL	3	561667	561550
C 365	FR ROOF-UP WINDSHIELD DEFROST	AMP MNL	3	561667	561550
C 366	RH DASH PANEL-GRN & RED LEDS	AMP MNL	3	560908	562006
C 367	ENGINE COMPT-DIF OIL T SENSOR	PED WP	2	561566	561690
C 368	FR ROOF-DEST. SIGN BALLAST	AMP MNL	3	561667	561550
C 369	FR ROOF-DEST. SIGN OPER. SW	TORRIX	5	------	562110
C 370	FR ROOF-DEST. SIGN FLUOR.	AMP MNL	2	560900	560898
C 371	FR ROOF-DEST. SIGN FLUOR.	AMP MNL	2	560900	560898
C 372	FR ROOF-DEST. SIGN SPEED SW	MOLEX	4	561477	561476
C 373	FR ROOF-NO SMOKING LT	AMP MNL	2	561248	561247
C 374	LH SWITCH PANEL	AMP MNL	6	561552	561515
C 375					
C 376					
C 377	LH DASH PANEL-STOP ENG.OVERIDE SW	EATON	8	------	562763
C 378					
C 379					
C 380	LH CONSOLE-DDR CONNECTOR	DEUTSCH	6	562360	------
C 381					
C 382					
C 383					
C 384					
C 385	EVAPOTATOR COMP WATER PUMP	PED WP	2	561566	561690
C 386	LH DASH PANEL-WCL POWER SYSTEM SW	EATON	8	------	562763

CONNECTORS CODE

NO	LOCATION	TYPE	CAVITY	#PIN HOUSING	#SOCKET HOUSING
C 387	RR JCT BOX (WCL)	AMP MNL	9	561661	561662
C 388	RR JCT BOX (WCL)	AMP MNL	12	561735	561734
C 389	WCL REAR DOOR	MOLEX	4	561477	561476
C 390	LAVATORY WALL-WCL REMOTE CTR	EATON	8	------	562763
C 391	LAVATORY WALL-WCL LAMP	EATON	8	------	562763
C 392	LAVATORY WALL-WCL SW. LT.	EATON	2	------	561835
C 393	LAVATORY WALL-WCL REMOTE SYS.	AMP CPC	4	561686	561687
C 394	UNDER INSTR. PANEL- B/U MONITOR	AMP MNL	4	560851	560852
C 395	DRIVER'S COMPT. - B/U MONITOR	AMP	5	------	------
C 396	FR SECT. LH HAT RACK-SPEAKER	MOLEX	4	562507	562503
C 397	ENGINE COMPT. CRADLE ACC.	DEUTSCH	40	562281	562284
C 398	ENGINE COMPT. – PRE-EXITATION ALT.	PED WP	2	561566	561690
C 399	ENGINE COMPT. – PRE-EXITATION ALT.	PED WP	2	561566	561690
C 400	ENGINE COMPT. BLOCK HEATER	PED MP	3	561781	561782
C 401					
C 402					
C 403	GALLEY FRIGO NORCOLD	AMP MNL	2	561248	561247
C 404	GALLEY LAMP	AMP MNL	2	561248	561247
C 405	LAST LUGGAGE COMP.- INVERTER SIGNAL	AMP MNL	2	561248	561247
C 406	FR JCT BOX COMPT.-ABS	AMP MNL	2	560900	560898
C 407					
C 408					
C 409	ENGINE CPT -LOW COOL. LEVEL	PED MP	2	------	562350
C 410	FR JCT BOX-DIODE CONNECTOR	AMP MNL	15	561987	561986
C 411	FR JCT BOX-DIODE CONNECTOR	AMP MNL	15	561987	561986
C 412	LH DASH PANEL-MASTER SWITCH SW	EATON	8	------	562763
C 413	ENG CPT-A/C HI UNLOAD PRS SW	PED WP	2	561566	561690
C 414					
C 415	RR JCT BOX – ENGINE SIGNAL	DEUTSCH	24	562280	562283
C 416					
C 417	FRONT JCT BOX-DIODES	AMP MNL	15	561987	561986
C 418	LH DASH PANEL-HTR WINDSH.SW	EATON	8	------	562763
C 419	FR JCT BOX-RETARDER OR JACOB	AMP MNL	3	561667	561550
C 420					
C 421					
C 422					
C 423					
C 424	UNDER INSTRUMENT PANEL CENTER	AMP MNL	3	561667	561550
C 425	FR JCT BOX-DIODES	AMP MNL	15	561987	561986
C 426	ENGINE COMPT. CLUTCH CTR FAN	PED WP	3	561781	561782
C 427	PRO-HEAT	PED-WP	2	561566	561680
C 428	PRO-HEAT	PED WP	6	561606	561607
C 429	FR JCT BOX COMPT.	AMP MNL	6	561552	561515
C 430	LH CONSOLE-TIMER	AMP FF	8	561188	562363
C 431	LH CONSOLE-PRE HEAT.	TAB AMP	1	561540	561539
C 432	ENGINE CPT.-PROX. SW. DOOR AJAR	PED-WP	2	561566	561680
C 433	FR SERVICE CPT. KNEEL. PRESS. SW	PED WP	2	561566	561690
C 434	FRONT JCT. BOX-DIODES	AMP MNL	15	561987	561986
C 435	FR SERVICE CPT.(RH) KNEEL. PIEZO	AMP MNL	2	560900	560898
C 436	RH HAT RACK-WCL CENTER ROOF ACC	AMP CPC	16	561639	561640
C 437	RH HAT RACK-WCL FR & RR SECT.	AMP CPC	24	561642	561643
C 438	EVAP CMPT- A/C CONTROL	AMP MNL	2	561248	561247
C 439	EVAP CMPT- A/C CONTROL	AMP MNL	2	561248	561247
C 440	EVAP CMPT- A/C CONTROL	DEUTSCH	4	562479	562477
C 441	FR JCT BOX- DIODES	AMP MNL	15	561987	561986
C 442					
C 443					
C 444					
C 445					
C 446					
C 447					
C 448					
C 449					
C 450	SOUND SYS. JCT. PANEL	MOLEX	4	562507	562503
C 451	WIRELESS MICRO-FIRST CPT BAG	MOLEX	2	562550	562549
C 452	UNDER DASH INSTR. PANEL	MOLEX	2	562550	562549
C 453	SOUND SYS. JCT.PANEL-VCP	PED WP	2	561566	561680

NO	LOCATION	TYPE	CAVITY	#PIN HOUSING	#SOCKET HOUSING
C 454	SOUND SYS.JCT.PAN.-FILT. VCP	PED WP	2	561566	561680
C 455	WIRELESS MICRO-LH HAT-RACK	MOLEX	6	------	562464
C 456	WORLD TRANSM.-RETARDER ACCUM.	PED MP	2	------	562427
C 457	WORLD TRANSM.-MAIN CONNECTOR	DEUTSCH	31	562572	562536
C 458	WORLD TRANSM.-TURBINE SP.SENS	PED MP	2	------	562426
C 459	WORLD TRANSM.-ENGINE SP.SENS.	PED MP	2	------	562426
C 460	WORLD TRANSM.-SPEED SENSOR	ITT	2	------	562541
C 461	WORLD TRANSM.-RETARDER TEMP.	PED MP	2	561566	561680
C 462	WORLD TRANSM.-RETARD SOL."K"	PED MP	2	------	562426
C 463	WORLD TRANSM.-SENSOR CONN.	DEUTSCH	16	562570	562571
C 464	RR JCT BOX-DDR CONNECTOR	DEUTSCH	6	------	562360
C 465	LH CONSOLE-SHIFTER SELECTOR	PED	20	------	562825
C 466	FR SERVICE CPT.-RESIS. MOD.	PED WP	3	------	562428
C 467	FR SERVICE CPT.-RESIS. MOD.	PED WP	3	------	562428
C 468			8		
C 469					
C 470	FR LH UPPER WHELL CPT-SILENT 1000	AMP MNL	2	561248	561247
C 471	FR LH UPPER WHELL CPT-SILENT 1000	AMP MNL	2	561248	561247
C 472	FR LH UPPER WHELL CPT-SILENT 1000	PED WP	2	561566	561690
C 473	FR LH UPPER WHELL CPT-SILENT 1000	AMP MNL	3	561667	561550
C 474	DRIVER CPT.-TEMP. SENSOR	AMP MNL	2	561247	561248
C 475	RR JCT BOX-SPEED SIGN CONNECTOR	DEUTSCH	2	562486	562485
C 476					
C 477					
C 478	ELECTRONIC DESTINATION SIGN	AMP CPC	9	561636	561637
C 479	HVAC MODULE	MOLEX	3		562783
C 480	UNDER DASH LH-DR. FAN SPEED CTR. MOD	PED	4	561889	561890
C 481	UNDER DASH LH-DR. FAN SPEED CTR. MOD	PED	3	561781	561782
C 482					
C 483	FR SERVICE CPT. (NOT USED)	PED PC	2	------	562237
C 484	UNDER DASH LH.-FOOT DAMPER MOTOR	PED PC	2	------	562076
C 485	UNDER DASH LH.-DASH & DEFR. DAM.MOT.	AMP MNL	3	561667	561550
C 486					
C 487	S.S.PANEL – AUDIO IN AMPLI	MOLEX	4	------	563071
C 488	S.S.PANEL – AMPLI SIGNAL	MOLEX	8	------	562465
C 489	S.S.PANEL – SPEAKER OUTLET	MOLEX	6	------	562464
C 490					
C 491					
C 492					
C 493					
C 494					
C 495					
C 496					
C 497					
C 498					
C 499					
C 500	FR LH UPPER WHELL CPT -PRODRIVER	MOLEX	6	562070	562069
C 501	FR LH UPPER WHELL CPT -PRODRIVER	PED MP	7	562433	------
C 502	LH DASH PANEL-PRE HEATER SW.	EATON	8	------	562763
C 503	LH CONSOLE-PRE HEATER SW.	EATON	2	------	561837
C 504	LH CONSOLE WEBASTO TIMER	AMP	8	------	562852
C 505	LH CONSOLE ESPAR TIMER	AMP	9	------	562681
C 506	FR JCT BOX CPT. DIGITAL CLOCK	AMP	4	561685	561687
C 507	FR SECT. LH HAT-RACK DIG. CLOCK	MOLEX	4	561477	561476
C 508	RR JCT BOX-FAN CLUTCH RETARDER	AMP MNL	6	561552	561515
C 509	FR LH UPPER WHELL CPT -DATA LOGGER	PED MP	16	------	562530
C 510	FR LH UPPER WHELL CPT -DATA LOGGER	DEUTSCH	9	562531	------
C 511	FR LH UPPER WHELL CPT -DATA LOGGER	PED MP	4	562532	------
C 512	FR LH UPPER WHELL CPT -DATA LOGGER	PED MP	10	562533	------
C 513	FR LH UPPER WHELL CPT -DATA LOGGER	AMP MNL	3	561667	561550
C 514	FR LH UPPER WHELL CPT -DATA LOGGER	PED MP	6	562433	562417
C 515	FR JCT BOX CPT.-INTERCOM	MOLEX	4	561477	561476
C 516	FR JCT BOX CPT.-INTERCOM	MOLEX	6	562070	562069
C 517	LAVATORY WALL-INTERCOM	MOLEX	6	562070	562069
C 519	UNDER DASH RH-SEDAN DOOR	HUMPHREY	2	------	562580
C 520	UNDER DASH RH-SEDAN DOOR	HUMPHREY	2	------	641385
C 521	UNDER DASH RH-SEDAN DOOR	HUMPHREY	2	------	641385

CONNECTORS CODE

NO	LOCATION	TYPE	CAVITY	#PIN HOUSING	#SOCKET HOUSING
C 522					
C 523	FR JCT BOX-FUSE BLOCK	PED	8	562647	562646
C 524	FR JCT BOX-FUSE BLOCK	PED	8	562647	562646
C 525	FR JCT BOX-FUSE BLOCK	PED	8	562647	562646
C 526	FR JCT BOX-FUSE BLOCK	PED	8	562647	562646
C 527	FR JCT BOX-FUSE BLOCK	PED	8	562647	562646
C 528	FR JCT BOX-FUSE BLOCK	PED	8	562647	562646
C 529	FR JCT BOX-12V OUTLET	AMP MNL	2	561247	561248
C 530	RR JCT BOX-FUSE BLOCK	PED	8	562647	562646
C 531	RR JCT BOX-FUSE BLOCK	PED	8	562610	---
C 532	RR JCT BOX-FUSE BLOCK	PED	8	562610	---
C 533	RR JCT BOX-FUSE BLOCK	PED	8	562647	562646
C 534	RR JCT BOX-FUSE BLOCK	PED	8	562647	562646
C 535	RR JCT BOX-FIRE MODULE DETECT.	AMP MNL	3	561667	561550
C 536	UNDER DASH RH-DRIVER'S HTR TEMP. CTR	AMP MNL	6	561552	561515
C 537	BATT. CPT.-A/C PRESS. SIGN. RLY	AMP MNL	2	561248	561247
C 538	FR SERVICE CPT.-OUTSIDE TEMP. SENSOR	AMP MNL	2	561248	561247
C 539	HVAC DASH MODULE OUTPUT CON	MOLEX	24		562780
C 540	HVAC DASH MODULE INPUT CON	MOLEX	22		562781
C 541	SOUND SYS. JCT PANEL-AUDIO SEAT SYS.	PED WP	2	561566	561690
C 542	LH HAT RACK-AUDIO SEAT SYSTEM	AMP MNL	3	561667	561550
C 543					
C 544	SOUND SYS JCT PANEL-AUDIO SEAT SYS.	PED WP	3	561781	562428
C 545	LH HAT RACK-AUDIO SEAT SYSTEM	AMP MNL	3	561667	561550
C 546	WIRELESS MIC. CHARGING SYSTEM	MOLEX	2	--------	563025
C 547	RH DASH PANEL-ACCESSORIES	AMP CPC	37	561645	561646
C 548	LH DASH PANEL-T.T. LT. TEST SW.	EATON	8	------	562763
C 549	LH DASH PANEL-FAN CLUTCH OVERR. SW	EATON	8	------	562763
C 550	LAST LUGG. CPT. -WCL RICON	AMP CPC	16	561694	561695
C 551	LAST LUGG. CPT. -WCL RICON	AMP CPC	16	561694	561695
C 552	LAST LUGG. CPT. -WCL RICON	AMP CPC	9	561636	561637
C 553	UNDER DASH R.H. - CONTROL. HEAD	MOLEX	16	---------	562559
C 554	UNDER DASH R.H. - CONTROL. HEAD	MOLEX	16	---------	562559
C 555	UNDER DASH R.H. - CONTROL. HEAD	MOLEX	16	---------	562559
C 556	UNDER DASH R.H. - RADIO ACC.	MOLEX	2	562550	562549
C 557	UNDER DASH R.H. - RADIO ACC.	MOLEX	9	562556	562555
C 558	UNDER DASH R.H. - RADIO ACC.	MOLEX	4	562507	562503
C 559	SOUND SYS. JCT. PANEL – FILTER AMPLI	PED WP	2	561566	561690
C 560	SOUND SYS. JCT. PANEL – POWER AMPLI	MOLEX	4	562507	562503
C 561	L.H. HAT RACK - WIRELESS MICRO	MOLEX	8		562465
C 562	L.H. HAT RACK - VCP	MOLEX	12	562556	563070
C 563	L.H MODESTY PANEL - DRIVERS SPK.	MOLEX	4	562507	562503
C 564	L.H MODESTY PANEL - MICRO	MOLEX	4	562507	562503
C 565	R.H MODESTY PANEL - MICRO	MOLEX	4	562507	562503
C 566	L.H. CONSOLE - BOOM MICRO	MOLEX	4	562507	562503
C 567	L.H. CONSOLE - DRIVERS MICRO	MOLEX	4	562507	562503
C 568	SOUND SYS. JCT. PANEL - PASS. SPK	CINCH	4	562553	562552
C 569	SOUND SYS. JCT. PANEL - POWER AMPLI.	MOLEX	9	562556	562555
C 570	UNDER DASH PANEL TTLT	MOLEX	6		562464
C 571	UNDER DASH PANEL TTLT	MOLEX	20		562778
C 572	UNDER DASH PANEL TTLT	MOLEX	18		562779
C 573	UNDER DASH PANEL TTLT	MOLEX	8		562465
C 574	HAT -RACK FLUOR. INDIRECT LIGHTING	MOLEX	6	---------	562759
C 575	HAT -RACK FLUOR. INSTATION LIGHT	MOLEX	4	562507	562503
C 576	HAT -RACK FLUOR. INDIRECT LIGHTING	AMP MNL	3	561667	561550
C 577	HAT -RACK FLUOR. INDIRECT LIGHTING	AMP MNL	3	561667	561550
C 578	HAT -RACK FLUOR. INSTATION LIGHT	MOLEX	4	562507	562503
C 579	L.H HAT RACK – VCP POWER	MOLEX	4		563071
C 580	RH DASH PANEL-HAT RACK FAN SW	EATON	8	--------	562763
C 581					
C 582	FRONT SERVICE CMPT. - WINDOWS AJAR	PED WP	2	561566	561690
C 583	L.H. DASH PANEL - MASTER KEY	DEUTSCH	2	562486	562485
C 584	FRONT SERVICE CMPT. - AIR HORH	HUMPHREY	3	--------	641385
C 585					
C 586					
C 587	LH PARCEL RACK DVD UNIT	MOLEX	4	563040	563071
C 588	FRONT SERVICE CPT. CENTER SOUND SYS.	CONNXALL	9	563163	563089

NO	LOCATION	TYPE	CAVITY	#PIN HOUSING	#SOCKET HOUSING
C 589	UNDER DASH - L.H. MIRROR	CONNXALL	9	563163	563089
C 590	UNDER DASH - R.H. MIRROR	AMP MNL	9	561670	561669
C 591	L.H.CONSOLE - MIRROR L.H.	EURAMTEC	8	--------	562799
C 592	L.H.CONSOLE - MIRROR R.H.	EURAMTEC	8	--------	562799
C 593	BATTERY CMPT. - CHARGER	PED WP	3	561781	561782
C 594	FRONT ROOF - DRIVERS LIGHT	LEEKRAFT		---------	562803
C 595	DASH CENTER MODULE - OPEN DOOR	MOLEX	4	561477	561476
C 596	DASH CENTER MODULE - CLOSE DOOR	MOLEX	4	561477	561476
C 597	L.H. DASH PANEL - DISPLAY SET SW.	MOLEX	5		562812
C 598	L.H. DASH PANEL - DISPLAY SET SW.	MOLEX	5		562812
C 599	UND.DASH-MAGN.SW.CTR POS. DR'S AIR	AMP MNL	2	561248	561247
C 600	ENGINE CPT.-A/C LOW PRESS SW. UNLOAD	PED	2	562348	562471
C 601	L.H. ROOF - WINDOW AJAR	AMP MNL	2	561248	561247
C 602	L.H. ROOF - WINDOW AJAR	MOLEX	4	561477	561476
C 603	R.H. ROOF - WINDOW AJAR	AMP MNL	2	561248	561247
C 604	LH PARCEL RACK DVD VIDEO STABILIZER	SWITCHCRAFT	1	563074	
C 605	HAT RACK - MOTOR FAN	PED	2	560997	561030
C 606	HAT RACK - MOTOR FAN	PED	2	560997	561030
C 607					
C 608	FRONT SERVICE CMPT. SPEED SIGNAL	PED WP	2	561566	561690
C 609	LAVATORY - NIGHT LIGHT				
C 610					
C 611	HAT RACK READING LTS RICON	MOLEX	6	562558	562557
C 612	HAT -RACK FLUOR. INSTATION LTS RICON	MOLEX	4	562507	562503
C 613	HAT -RACK INDIRECT LTS RICON	AMP MNL	3	561667	561550
C 614	HAT -RACK INDIRECT LTS RICON	AMP MNL	3	561667	561550
C 615	LH PARCEL RACK DVD SING ALONG ADAPT.	MOLEX	2	562550	562549
C 616					
C 701	ZF TRANSMISSION ECU	KOSTAL	20		
C 702	SHIFT SELECTOR – LH CONSOLE	AMP	14		563338
C 712	NEUTRAL SWITCH ON ZF TRANSM. (TOP)	AMP	4		563340
C 714	OUTPUT SENSOR ON ZF TRANSM. (BOTTOM)	AMP	4		563340
C 717	BATT. CPT - MAIN CONNECTOR	AMP CPC	22	561642	561643
C 720	ENGINE COMPT – BLKHD CONNECTOR	DEUTSCH	31	563359	563358
C 721	LH CONSOLE – ZF TESTMAN DIAGNOSTIC	AMP MNL	6	563356	
C 723	ENGINE COMPT – FOR TRANSM.	DEUTSCH	3		562884
C 736	ENGINE COMPT – ZMTEC MODULE	PACKARD	30	563053	
C 740	DRIVE AXLE – EASY START SOL VALVE	LEONI	2	--	641949
C 742	BATT. CPT – FUSE BLOCK	AMP	8	562446	
C 745	FR SERV.COMPT – THROTTLE POS. SENSOR	PED WP	3	561781	
C 760	FR SERV. COMPT – TO J1939	DEUTSCH	3		
C 761	FR SERV. COMPT – TO J1939	DEUTSCH	3		562884
C 762	ENGINE COMPT – TO J1939	DEUTSCH	3		562884
C 763	ENGINE COMPT – TO J1939	DEUTSCH	3		562884
C 764	ENGINE COMPT – TO J1939	DEUTSCH	3		562884
C 765	ENGINE COMPT – TO J1939	DEUTSCH	3		562884
C 766	ENGINE COMPT – TO J1939	DEUTSCH	3		562884
C X	CLUSTER	JAE	22		562766
C Y	CLUSTER	JAE	30		562767
L X	CLUSTER	JAE	22		562764
L					
R					

CONNECTORS CODE

NO	LOCATION	TYPE	CAVITY	#PIN HOUSING	#SOCKET HOUSING
AA1	BEHIND DASH - SONALERT	BOSCH	5		561183
AA2	BEHIND DASH - SONALERT	BOSCH	5		561183
C X1	FR SERVICE COMPT- ECU ABS	AMP	15		563200
C X2	FR SERVICE COMPT- ECU ABS	AMP	18		563201
C RXTX	HVAC DASN MODULE COMMUNICATION	MOLEX	3	563206	562873
C S	RR JCT BOX ECU WORLD TR.	PED	32		562817
C T	RR JCT BOX ECU WORLD TR.	PED	32		562824
C TCI	ENGINE CPT – DDEC V TURBO TEMP.	FCI	2		563404
C V	RR JCT BOX ECU WORLD TR.	PED	32		562823
C WX1	ENGINE CPT-WEBASTO PRE-HEAT WATER	AMP SEALED	7		563135
C WX3	ENGINE CPT-WEBASTO PRE-HEAT WATER	AMP SEALED	7	563134	
C Y	CLUSTER	JAE	30	---	562765
C 1	FR JCT BOX COMPARTMENT	AMP CPC	14	561585	561584
C 2	FR JCT BOX COMPARTMENT	AMP CPC	16	561639	561640
C 3	FR JCT BOX COMPARTMENT	AMP CPC	24	561641	561643
C 4	FR JCT BOX COMPARTMENT	AMP CPC	37	561644	561646
C 5	FR SERVICE COMPT.-UNDERNEATH	AMP CPC	37	561644	561646
C 6	FR SERVICE COMPT.-UNDERNEATH	AMP CPC	16	561639	561640
C 7					
C 8	FR SERVICE COMPT.-UNDERNEATH	AMP CPC	24	561641	561643
C 9	FR SERVICE COMPT.-UNDERNEATH	AMP CPC	24	561641	561643
C 10	LUGGAGE COMPT. WATER BOOSTER PUMP	PED	2	562348	562471
C 11	FR SERVICE COMPARTMENT	AMP CPC	37	561644	561646
C 12	FR SERVICE COMPARTMENT	AMP CPC	16	561639	561640
C 13	LH CONSOLE-CTR MIRROR	AMP MNL	6	561552	561515
C 14	UNDER DASH-LH MIRROR	AMP MNL	9	561661	561662
C 15	A/C CLUTCH	PED WP	2	561566	561690
C 16	LH CONSOLE SW-CRUISE ON OFF	EATON	10	------	562763
C 17	LH CONSOLE SW-CRUISE RESUME	EATON	10	------	562763
C 18	LH CONSOLE SW-CRUISE SET	EATON	10	------	562763
C 19	LH CONSOLE DECEL SW	EATON	10	------	562763
C 20	RR JCT BOX	DEUTSCH	70	562282	562285
C 21	RR JCT BOX	DEUTSCH	24	562280	562283
C 22	RR JCT BOX - EATON TRANSM.	AMP MNL	6	561552	561515
C 23					
C 24					
C 25					
C 26	HYD & MAN TRANSM.-NEUT.& B/U	PED WP	4	561610	561611
C 27	HYD & MAN TRANSM.-SPEED SENS.	PED WP	2	561566	561690
C 28	EATON TRANSMISSION	DEUTCH	3	562877	562884
C 29	EATON TRANSMISSION	PED MP	6	562878	------
C 30	RR JCT BOX - ECU EATON TRANSM.	PED MP	32	------	562866
C 31	RR JCT BOX - ECU EATON TRANSM.	PED MP	24	------	562865
C 32	DDEC ENGINE-ECM	AMP	68	------	563403
C 33	RR JCT BOX - EATON TRANSM.	DEUTCH	9	562531	------
C 34	RH. CONSOLE - EATON TRANSM. SHIFTER	PED MP	3	------	562871
C 35	RR JCT BOX	DEUTCH	40	562281	562284
C 36	RH. CONSOLE - EATON TRANSM. SHIFTER	PED MP	24	------	562874
C 37	RR SECTION-LH HAT RACK	MOLEX	6	562558	562557
C 38	RR SECTION-RH HAT RACK	MOLEX	6	562558	562557
C 39	LH CONSOLE - EATON TRANSM. DISPLAY	AMP MNL	4	561551	561668
C 40	RR JCT BOX - EATON TRANSM. J1939	DEUTCH	3	562877	562884
C 41	LAVATORY ROOF LIGHT	LEECRAFT	2	-----	562803
C 42	LAVATORY BACK WALL-WTR TANK	AMP MNL	2	560900	560898
C 43	LAVATORY BACK WALL-ACCES.	AMP MNL	9	561661	561662
C 44	EATON TRANSM. J1939	DEUTCH	3	562877	562884
C 45	FR JCT BOX COMPARTMENT	AMP CPC	24	561642	561643
C 46	EATON TRANSM. J1939	DEUTCH	3	562877	562884
C 47	FR SERVICE COMPARTMENT	AMP CPC	16	561694	561695
C 48	FR. SERVICE CMPT.PRESS SW PARKBREAK	PED WP	2	561566	561690
C 49	BATTERIE COMPT.-LT	AMP MNL	2	561248	561247
C 50	FR SERVICE COMPT.-LOW BUOY	PED WP	1	561605	561577
C 51					
C 52	RR JCT BOX	AMP CPC	24	561642	561643
C 53	SPARE TIRE COMPT ENTRANCE STEP LIGHT	DEUTCH	2	562486	562485
C 54	SPARE TIRE COMPT ENTRANCE STEP LIGHT	DEUTCH	2	562486	562485
C 55	RH SWITCH PANEL	AMP CPC	9	561636	561637

NO	LOCATION	TYPE	CAVITY	#PIN HOUSING	#SOCKET HOUSING
C 56	HAT RACK- MOTOR FAN	MOLEX	6	562558	562557
C 57	HAT RACK- MOTOR FAN	MOLEX	6	562558	562557
C 58	RR JCT BOX AC PANEL	DEUTSCH	24	562280	562283
C 59	RR JCT BOX AC PANEL	AMP CPC	14	561584	561583
C 60	RR JCT BOX COMPT.-LT	AMP MNL	2	561248	561247
C 61	LUGGAGE COMPARTMENT LTS	AMP MNL	2	561248	561247
C 62	LUGGAGE COMPARTMENT LTS	AMP MNL	2	561248	561247
C 63	LUGGAGE COMPARTMENT LTS	AMP MNL	2	561248	561247
C 64	LUGGAGE COMPARTMENT LTS	AMP MNL	2	561248	561247
C 65	LUGGAGE COMPARTMENT LTS	AMP MNL	2	561248	561247
C 66	LUGGAGE COMPARTMENT LTS	AMP MNL	2	561248	561247
C 67	LUGGAGE COMPARTMENT LTS	AMP MNL	2	561248	561247
C 68	LUGGAGE COMPARTMENT LTS	AMP MNL	2	561248	561247
C 69	RR AXLE ACC-INSIDE PVC END	PED WP	6	561568	561578
C 70	LH CONSOLE	AMP CPC	16	561642	561643
C 71	FR JCT BOX COMPARTMENT	AMP CPC	37	561645	561646
C 72	FR JCT BOX COMPARTMENT	AMP CPC	24	561642	561643
C 73	DASH CENTER PANEL	AMP CPC	16	561639	561640
C 74	FR JCT BOX COMPARTMENT	AMP CPC	37	561645	561646
C 75	SERV CPT. RXT. ENT. DOOR SW	DEUTSCH	4	562479	562477
C 76	LUGGAGE COMPT.-AIR RET.SENS.	AMP MNL	2	561248	561247
C 77	LUGGAGE COMPT.-AIR RET.SENS.	AMP MNL	2	561248	561247
C 78					
C 79					
C 80	LUGGAGE COMPT.-AIR RET.SENS.	AMP MNL	2	561248	561247
C 81	PASSENGER COMPT.-AISLE LTS	AMP MNL	2	560900	560898
C 82	ENTRANCE DOOR	MOLEX	6	562070	562069
C 83	ENTRANCE DOOR-PROIMITY SW	MOLEX	4	561477	561476
C 84	ENTRANCE DOOR-PRESSURE SW	PED WP	2	561566	561690
C 85	UNDER INSTRUMENT PANEL LH	AMP MTA-100	------	562248	------
C 86					
C 87	RR END ROOF	AMP CPC	9	561636	561637
C 88	FR. SERVICE CMPT.PRESS SW PARK BRAKE	PED WP	2	561566	561690
C 89	RR END ROOF-B/U NONITOR	AMP CPC	4	561582	561581
C 90	RR JCT BOX	AMP CPC	15	561987	561986
C 91	RR JCT BOX	AMP CPC	37	561714	561713
C 92	FR LH UPPER WHELL CPT-ABS	AMP CPC	9	561635	561637
C 93	FR LH UPPER WHELL CPT-ABS		35	------	641094
C 94	RH CONSOLE ENTRANCE STEP LIGHT	DEUTCH	2	562486	562485
C 95	CONDENSOR CPT - LIQ. SOL. VALVE	PED WP	2	561566	561690
C 96	FR AXLE ACCESSORIES	AMP CPC	14	561585	561585
C 97	RR AXLE ACC-INSIDE PVC END	PED WP	6	561568	561578
C 98	FR SERVICE COMPT-EL.FT.PEDAL	PED WP	3	561782	561781
C 99	FR SERVICE COMPT LTS	AMP MNL	2	561248	561247
C 100	LH CONSOLE – 120 VOLTS SWITCH	EATON	8	------	562763
C 101	FR SERVICE COMPT-ELEC. HORNS	PED WP	2	561566	561690
C 102	SIDE (LH/FR & CENTER) DIR. LTS	GROTE	2	------	562155
C 103	SIDE (LH/FR & CENTER) MARKER LTS	GROTE	2	------	562155
C 104	SIDE (RH/FR & CENTER) DIR. LTS	DEUTSCH	4	562479	562477
C 104	FR SERV & SIDE CPT-FLASH. RH	GROTE	2	------	562155
C 105	FR SERVICE COMPT-LIQ.S.VALVE	PED WP	2	561566	561690
C 106	FR SERVICE COMPT-WATER VALVE	PED WP	2	561566	561690
C 107					
C 108	FR SERVICE COMPT-KNEEL.SYS	PED WP	2	561566	561690
C 109	FR SERVICE COMPT-KNEEL.SYS	PED WP	2	561566	561690
C 110	FR SERVICE COMPT-KNEEL.SYS	PED WP	2	561566	561690
C 111	EVAPORATOR COMPT-DAMPER	DEUTSCH	2	562486	562485
C 112	LAVATORY BACK WALL-FLUSH PUMP SW.	DEUTSCH	4	562479	562477
C 113	SIDE (LH/RR) MARKER LTS	GROTE	2	------	562155
C 114	SIDE (LH/RR) DIR LTS	GROTE	2	------	562155
C 115					
C 116	ENGINE COMPT. LTS	GROTE	2		563268
C 117	SIDE (RH/RR) MARKER LTS	GROTE	2	------	562155
C 117	FR SRV. COMPT. KNEELING UP SOL VALVE	PED WP	2	561761	
C 118	ENGINE COMPT-LAVATORY FAN	PED WP	2	561566	561690
C 119	ENGINE CPT RR DOOR RH LO LAMP	PED WP	6	561606	561607
C 120	ENGINE CPT RR DOOR LH LO LAMP	PED WP	6	561606	561607

CONNECTORS CODE

NO	LOCATION	TYPE	CAVITY	#PIN HOUSING	#SOCKET HOUSING
C 121	SIDE (RH/RR) DIR. LTS	GROTE	2	------	562155
C 122					
C 123	TAG AXLE-UNLOAD TAG RH VALVE	PED WP	2	561566	561690
C 124	ENGINE CPT-ETHER SW	PED WP	2	561566	561690
C 125	ENGINE CPT-B/U ALARM	PED WP	2	561566	561690
C 126	ENGINE CPT-FLUSHING PUMP	PED WP	2	561566	561690
C 127	ENGINE CPT-FUEL FILTER	PED WP	2	561566	561690
C 128	ENGINE CPT-A/C COMPR.CLUTCH	ITT SS	2	561813	561812
C 129					
C 130	ENGINE CPT-UNLOADER	ITT SS	2	561813	561812
C 131	ENGINE CPT-UNLOADER	ITT SS	2	561813	561812
C 132	ENGINE CPT-A/C LO PRESS SW	PED WP	2	561566	561690
C 133	ENGINE CPT-A/C HI PRESS SW	PED WP	2	561566	561690
C 134	FR JCT BOX-LUGGAGE DIODE CON.	AMP MNL	15	561987	561986
C 135	FR JCT BOX-LUGGAGE DIODE CON.	AMP MNL	15	561987	561986
C 136	RR JCT BOX - A/C PANEL DIODE CONN.	AMP MNL	15	561987	561986
C 137	RR JCT BOX-TRANSMITTER	AMP MNL	2	560900	560898
C 138	RR JCT BOX-CONTROL MODULE	AMP HDP	15	------	562012
C 139	RR JCT BOX-LOGIC MODULE	AMP HDP	15	562011	------
C 140	HVAC DASH MODULE THERMOMETER	MOLEX	4		562782
C 141	INSTRUMENT PANEL LH UNLOAD TAG	AMP	2	561248	561247
C 142	LAVATORY DOOR WALL	AMP MNL	2	561248	561247
C 143					
C 144	UNDER LH SEAT-AISLE LTS	AMP MNL	4	560851	560852
C 145	RR JCT BOX CPT-RR SIDE LTS	AMP MNL	9	561670	561669
C 146	ENGINE CPT-MODULATOR VALVE	AMPHENOL	2	------	560412
C 147	BATT & RR J.B.CPT-DOCK.LTS	PED WP	2	561566	561690
C 148					
C 149	CONDENSER CPT-FAN MOTOR	ORDNANCE	3	562555	562001
C 150					
C 151	EVAPORATOR CPT-THERMOSTAT	ITT SS	2	561813	562159
C 152	CONDENSER CPT-FUEL GAUGE	PED WP	4	561610	561611
C 153	EVAPORATOR CPT-AIR AMB. SENS	AMP MNL	2	561248	561247
C 154	EVAPORATOR CPT-FRESH AIR SENS	ITT SS	2	561813	561812
C 155	EVAPORATOR CPT-WATER VALVE	PNEUMAC	4	563204	
C 156	EVAPOR. CPT-BYPASS WATER VAL.	PED WP	2	561566	561690
C 157					
C 158	CONDENSER CPT-A/C LO TEMP.	PED WP	2	561566	561690
C 159	CONDENSER CPT-A/C HI TEMP.	PED WP	2	561566	561690
C 160	FR AXLE-ABS RH SENSOR	WABCO	2	641132	------
C 161	FR AXLE-ABS RH VALVE	WABCO	3	------	641098
C 162	FR AXLE-ABS LH VALVE	WABCO	3	------	641098
C 163	FR AXLE-ABS LH SENSOR	WABCO	2	641132	------
C 164	RR AXLE-ABS LH SENSOR	WABCO	2	641132	------
C 165	RR AXLE-ABS LH VALVE	WABCO	3	------	641098
C 166	RR AXLE-ABS RH VALVE	WABCO	3	------	641098
C 167	RR AXLE-ABS RH SENSOR	DEUTSCH	2	641132	------
C 168	RR AXLE-ABS OPT ATC	PED WP	2	561566	561690
C 169	RR JCT BOX-SPEED SW	AMP HDP	15	------	562012
C 170	FR JCT BOX-FLASHER UNIT	TC	2	------	561940
C 171	LH CONSOLE	AMP CPC	24	561642	561643
C 172					
C 173					
C 174	UNDER DASH RH-HTR MODULE	AMP MNL	9	561670	561669
C 175	UNDER DASH RH-HTR MODULE	AMP MNL	9	561670	561669
C 176	UNDER DASH RH-WIPER PULSE	AMP FF	6	------	561186
C 177	UNDER DASH RH-WIPER MOTOR	AMP FF	6	------	561186
C 178	UNDER DASH RH-LH FAN	TC	2	561030	560997
C 179	UNDER DASH RH-RH FAN	TC	2	561030	560997
C 180	RR JCT BOX-DIODE CONNECTOR	AMP MNL	15	561987	561986
C 181	RR JCT BOX-DIODE CONNECTOR	AMP MNL	15	561987	561986
C 182					
C 183	FR SERVICE CPT-KNEELING PAN.	PED WP	4	561610	561611
C 184	FR SERVICE CPT-KNEELING SW	ITT SS	3	561111	561080
C 185					
C 186					
C 186M	RR JCT BOX CPT.-SPD SIGN. M.TR	PED WP	2	561566	561690

NO	LOCATION	TYPE	CAVITY	#PIN HOUSING	#SOCKET HOUSING
C 186W	RR JCT BOX CPT.-SPD SIGN. WT	PED WP	2	561566	561690
C 187	FR JCT BOX-RPM RESISTOR CON.	AMP MNL	6	561552	561515
C 188					
C 189	ENGINE CPT RR DOOR B/U LT	TRUCK-LITE	2	------	562755
C 190	ENGINE CPT RR DOOR TAIL/ STOP LT	SUPER SEAL	3		562601
C 191	ENGINE CPT RR DOOR RH TAIL/STOP LT	SUPER SEAL	3		562601
C 192	ENGINE CPT RR DOOR DIR. LT	SUPER SEAL	3		562601
C 193					
C 194					
C 195					
C 198	ENGINE CPT RR DOOR LICENCE LT	PED WP	2	562348	562471
C 199					
C 200	RH HAT RACK-FLUORESCENT	AMP MNL	2	561248	561247
C 201	RH HAT RACK-FLUORESCENT	AMP MNL	2	561248	561247
C 202	RH HAT RACK-INDIRECT LIGHTING	MOLEX	2	---------	562758
C 203	RH HAT RACK-INDIRECT LIGHTING	MOLEX	6	---------	562759
C 204	RH HAT RACK-GENERAL LT	AMP MNL	2	560900	560898
C 205	FR SECT.-RH HAT RACK SPEAKER	AMP MNL	9	561661	561662
C 206	RH HAT RACK-READING LT	AMP FF	4	----------	562756
C 207	LH HAT RACK-READING LT	AMP FF	4	----------	562756
C 208	LH HAT RACK-BALLAST	MOLEX	2	----------	562758
C 209	LH HAT RACK HOTESS CHIME	AMP MNL	3	561667	561550
C 210	FR SECT.-LH HAT RACK SPEAKER	AMP MNL	9	561661	561662
C 211	FR ROOF-STORE LH	AMP MNL	2	560900	560898
C 212	FR ROOF-STORE RH	AMP MNL	2	560900	560898
C 213					
C 214	ENGINE CPT J1922				
C 215	TAG AXLE - A.T.C. SYSTEM				
C 216	TAG AXLE - A.T.C. SYSTEM				
C 217	RH DASH PANEL-FRONT CAMERA SW	EATON	8	--------	562763
C 218	RH DASH PANEL-FRONT CAMERA SW	AMP MNL	2	560900	560898
C 219	ENGINE CMPT. – FIRE DETECTOR	DEUTSCH	2	562486	562485
C 220	RR.JCT.BOX-FUEL PRIME PUMP	TC	1	561070	561073
C 221	BATTERY CMPT. FIRE DETECTOR	DEUTSCH	2	562486	562485
C 222	ENGINE CMPT. FIRE DETCTOR	DEUTSCH	2	562486	562485
C 223	ENGINE CMPT. FIRE DETCTOR	DEUTSCH	2	562486	562485
C 224	ENGINE CMPT. -VORAD J1939	DEUTSCH	3	562877	562884
C 225	ENGINE CMPT. -VORAD J1939	DEUTSCH	3	562877	562884
C 226	FR LH UPPER WHEEL CPT-VORAD J1939	DEUTSCH	3	562677	562884
C 227					
C 228	ENG.CPT.- A/C COMPRESSOR	PED WP	2	561566	561690
C 229					
C 230	ENG.CPT.-FUEL PRIME PUMP FEED	DEUTSCH	2	562486	562485
C 231	ENG.CPT.-FUEL PRIME PUMP SW.	PED WP	2	561566	561690
C 232	ENG.CPT.-FUEL PRIME PUMP	PED WP	2	561566	561690
C 233	FR. SERVICE COMPT.	VDO	8		562043
C 234	FR. SERVICE COMPT.	VDO	8		562044
C 235	FR. SERVICE COMPT.	VDO	8		562041
C 236	LUGGAGE COMPARTEMENT	AMP MNL	4	560851	560852
C 237	UNDER DASH LH-JACOB CLUTCH SW	ITT SS	3	561111	561080
C 238	UNDER DASH LH-PASS. REC. DAMPER SW	EATON	8	------	562763
C 239	FR SERVICE CPT-HI BUOY VALVE	PED WP	2	561566	561690
C 240	FR SERVICE CPT-KNEEL PROX SW	PED WP	3	561781	562428
C 241	HEADLAMPS HI BEAM	HELLA	2		562623
C 242	HALOGEN HEAHLAMPS LO BEAM	HELLA	2		562623
C 242	XENON HEADLAMPS LO BEAM	DELPHI	2		563366
C 243	FRONT CAP- HEADLIGHTS MAIN CONN	DEUTCH	6	565131	562789
C 244	FR SERVICE CPT-LH FOG LAMP	DEUTCH	2	562902	562901
C 245	FR SERVICE CPT-RH FOG LAMP	DEUTCH	2	562902	562901
C 246	UNDER DASH - L.H. MIRROR	CONNXALL	5	563196	563090
C 247	HEADLAMPS MARK & DIR LTS	AMP SUPER S	3		562601
C 248	FR JCT BOX-WIPER PULSE GEN	AMP FF	6	------	561108
C 249					
C 250	LH CONSOL PANEL- LOW BOY	PED	2	561566	561690
C 251	LH DASH PANEL-FAST IDLE SW	EATON	8	------	562763
C 252					
C 253	LH DASH PANEL-ETHER SW	EATON	8	------	562763

CONNECTORS CODE

NO	LOCATION	TYPE	CAVITY	#PIN HOUSING	#SOCKET HOUSING
C 254	INST. PANEL RH-ENTR.DOOR SW.	TORRIX	5	------	562110
C 255	LH DASH PANEL-JACOB & RETARDER SW	EATON	8	------	562763
C 256					
C 257					
C 258	LH SW PANEL-MULTI FUNC. SW	AMP FF	8	561188	------
C 259	LH SW PANEL-MULTI FUNC. SW	AMP FF	6	------	561108
C 260	FR SERVICE CPT-LUG DOOR LCK	PED WP	6	561606	561607
C 261	UNDER DASH RH-DOOR MODULE	AMP MNL	9	561670	561669
C 262	UNDER DASH RH-DOOR MODULE	AMP MNL	4	561551	561668
C 263	UNDER DASH RH-DOOR MODULE	AMP MNL	3	561667	561550
C 264	UNDER DASH RH-DOOR MODULE	AMP MNL	3	561667	561550
C 265	UNDER DASH RH-DOOR MODULE	AMP HDP-20	15	562011	562012
C 266					
C 267	UNDER DASH RH	AMP CPC	24	561642	561643
C 268					
C 269	UNDER DASH - R.H. MIRROR	CONNXALL	5	563196	563090
C 270	LH MIRROR POST	MOLEX	6	562070	562069
C 271	RH MIRROR POST	MOLEX	6	562070	562069
C 272	LH MIRROR	SPARTAN	6	------	990158
C 273	RH MIRROR	SPARTAN	6	------	990158
C 274	RR. JCT. BOX – SIGNAL ALT. MODULE	AMP MNL	12	561735	561734
C 275	UNDER DASH RH-DOOR MODULE	AMP MNL	9	561670	561669
C 276	UNDER DASH RH-LOCK SOL.VALVE	AMP MNL	2	561248	561247
C 277					
C 278					
C 279 *	FR SERVICE CPT.- STEERING ZF	DEUTCH	2		562486
C 279	UNDER DASH CYLINDER READ SW.	AMP MNL	2	561248	561247
C 280	LH CONSOLE-UNLOAD TAG SW.	NGR	10	------	562763
C 281					
C 282					
C 283					
C 284	LH DR'S ROOF - MONITOR FEED	PED WP	3	561781	561782
C 285	LH DR'S ROOF – SOUND SYSTEM	AMP CPC	24	561642	561643
C 286	RH SW PANEL-A/C & HEAT	EATON	8	------	562763
C 287	ENGINE COMPT-LTS SW	PED WP	2	561566	561690
C 288	RH SW PANEL-FRESH AIR	EATON	8	------	562763
C 289					
C 290					
C 291					
C 292	LH PARCEL RACK VIDEO PANEL– MONITOR	MOLEX	4	563040	563071
C 293	LH PARCEL RACK VIDEO PAN. – RCA RELAY	AMP MNL	2	561248	561247
C 294	LH PARCEL RACK VIDEO PAN.– RCA RELAY	AMP MNL	2	561248	561247
C 295	LH PARCEL RACK VID. PANEL– AMPLI VIDEO	MOLEX	4	563040	563071
C 296	LH PARCEL RACK VIDEO PAN. – MICRO SIGNAL	MOLEX	4	562507	562503
C 297	INSTRUMENT PANEL RH -LTS	AMP MNL	2	560900	560898
C 298					
C 299	RH DASH PANEL SW-GALLEY	EATON	8	------	562763
C 300	FR SERVICE CPT.- LOW BEAM RESISTORS	PED WP	2	561566	561690
C 301					
C 302					
C 303					
C 304					
C 305					
C 306					
C 307					
C 308	LH CONSOLE SW-RHEOSTAT	TC	2	561030	560997
C 309					
C 310	LH DASH PANEL -LUG. DOOR LCK SW	EATON	8	------	562763
C 311	RH DASH PANEL -HOS & PAS CHIME SW	EATON	8	------	562763
C 312	RH DASH PANEL -READING LTS SW	EATON	8	------	562763
C 313	RH DASH PANEL -GEN & FLUOR LTS SW	EATON	8	------	562763
C 314	LH DASH PANEL-FR DEST. SIGN SW	EATON	8	------	562763
C 315	LH DASH PANEL-LH STORE SW	EATON	8	------	562763
C 316	LH CONSOLE SPARE SWITCH	EATON	8	------	562763
C 317	LH DASH PANEL-RH STORE SW	EATON	8	------	562763
C 318	LH CONSOLE SW-DRV WINDOW LIFT	EATON	8	------	562763
C 319					

NO	LOCATION	TYPE	CAVITY	#PIN HOUSING	#SOCKET HOUSING
C 320	RH DASH PANEL-DRIVER'S LTS SW	EATON	8	------	562763
C 321	READING LTS TEST				
C 322	LH CONSOLE DRV WIND LIFT MOT	PED PO	2	------	561848
C 323	LH CONSOLE CRUISE CTR SW PAN. AMP	CPC	9	561636	561637
C 324					
C 325	LH DASH PANEL-KNEELING SW	EATON	8	------	562763
C 326	ENGINE CMPT.	PED	4	------	561610
C 327	ENGINE CONTROL	DEUTSCH	6	562583	562581
C 328	GALLEY-LAMP	AMP MNL	2	561248	561247
C 329	ENGINE TACHO SIGNAL	PED WP	3	561781	561789
C 330					
C 331	GALLEY MICROWAVE SW	EATON	8	------	562763
C 332					
C 333	GALLEY RH CONTAINER SW	EATON	8	------	562763
C 334	GALLEY LH CONTAINER SW	EATON	8	------	562763
C 335					
C 336					
C 337	INSTR PANEL LH-UP WIPER SW	EATON	8	------	562763
C 338	INSTR PANEL LH-UP DEFROST SW	EATON	8	------	562763
C 339	INSTR PANEL LH-UP WASHER SW	EATON	8	------	562763
C 340	FR JCT. BOX FIRE PIEZO ALARM	AMP MNL	2	560900	560898
C 341	INSTR PANEL LH-HEAT MIRROR SW	EATON	8	------	562763
C 342	ENGINE RR START SW	DEUTSCH	2	562586	562585
C 343	INSTR PANEL LH-HEADLAMP SW	EATON	8	------	562763
C 344	INSTR PANEL LH-HAZARD LT SW	EATON	8	------	562763
C 345	INSTR PANEL LH-FOG LT SW	EATON	8	------	562763
C 346					
C 347	INSTR PANEL LH-DASH LT SW	AMP MNL	2	560900	560898
C 348	INSTR PANEL CENT-RACOR MODULE	MOLEX	6	562070	562067
C 349					
C 350	RH CONSOLE-THERMOMETER	AMP MNL	3	561667	561550
C 351	LH HAT RACK-FLUOR 110V	MOLEX	4	561477	561476
C 352	RH CONSOLE-DRV TEMP SENSOR	BURNDY	4	------	561104
C 353	INSTR PANEL RH-DRV FAN RHEOST	AMP MNL	6	561552	561515
C 354	INSTR PANEL RH-DRV TEMP CTR	AMP MNL	6	561552	561515
C 355	INSTR PANEL RH-FR TEMP CTR	AMP MNL	3	561667	561550
C 356					
C 357	INSTR PANEL RH-WATER TEMP GA	AMP MNL	3	561667	561550
C 358	INSTR PANEL RH-FUEL LEVEL GA	AMP MNL	3	561667	561550
C 359					
C 360					
C 361	FR ROOF-WIPER MOTOR	AMP FF	6	------	561186
C 362	FR ROOF-LAVATORY OCCUPIED LT	AMP MNL	2	561248	561247
C 363	FR ROOF-WATCH YOUR STEP LT	AMP MNL	2	561248	561247
C 364	FR ROOF-DESTINATION SIGN	AMP MNL	3	561667	561550
C 365	FR ROOF-UP WINDSHIELD DEFROST	AMP MNL	3	561667	561550
C 366	RH DASH PANEL-GRN & RED LEDS	AMP MNL	3	560908	562006
C 367	ENGINE COMPT-DIF OIL T SENSOR	PED WP	2	561566	561690
C 368	FR ROOF-DEST. SIGN BALLAST	AMP MNL	3	561667	561550
C 369	FR ROOF-DEST. SIGN OPER. SW	TORRIX	5	------	562110
C 370	FR ROOF-DEST. SIGN FLUOR.	AMP MNL	2	560900	560898
C 371	FR ROOF-DEST. SIGN FLUOR.	AMP MNL	2	560900	560898
C 372	FR ROOF-DEST. SIGN SPEED SW	MOLEX	4	561477	561476
C 373	FR ROOF-NO SMOKING LT	AMP MNL	2	561248	561247
C 374	LH SWITCH PANEL	AMP MNL	6	561552	561515
C 375					
C 376					
C 377	LH DASH PANEL-STOP ENG.OVERIDE SW	EATON	8	------	562763
C 378					
C 379					
C 380	LH CONSOLE-DDR CONNECTOR	DEUTSCH	6	562360	------
C 381					
C 382					
C 383					
C 384					
C 385	EVAPOTATOR COMP WATER PUMP	PED WP	2	561566	561690
C 386	LH DASH PANEL-WCL POWER SYSTEM SW	EATON	8	------	562763

CONNECTORS CODE

NO	LOCATION	TYPE	CAVITY	#PIN HOUSING	#SOCKET HOUSING
C 387	RR JCT BOX (WCL)	AMP MNL	9	561661	561662
C 388	RR JCT BOX (WCL)	AMP MNL	12	561735	561734
C 389	WCL REAR DOOR	MOLEX	4	561477	561476
C 390	LAVATORY WALL-WCL REMOTE CTR	EATON	8	------	562763
C 391	LAVATORY WALL-WCL LAMP	EATON	8	------	562763
C 392	LAVATORY WALL-WCL SW. LT.	EATON	2	------	561835
C 393	LAVATORY WALL-WCL REMOTE SYS.	AMP CPC	4	561686	561687
C 394	UNDER INSTR. PANEL- B/U MONITOR	AMP MNL	4	560851	560852
C 395	DRIVER'S COMPT. - B/U MONITOR	AMP	5	------	------
C 396	FR SECT. LH HAT RACK-SPEAKER	MOLEX	4	562507	562503
C 397	ENGINE COMPT. CRADLE ACC.	DEUTSCH	40	562281	562284
C 398	ENGINE COMPT. – PRE-EXITATION ALT.	PED WP	2	561566	561690
C 399					
C 400	ENGINE COMPT. BLOCK HEATER	PED MP	3	561781	561782
C 401					
C 402					
C 403	GALLEY FRIGO NORCOLD	AMP MNL	2	561248	561247
C 404	GALLEY LAMP	AMP MNL	2	561248	561247
C 405	LAST LUGGAGE COMP.- INVERTER SIGNAL	AMP MNL	2	561248	561247
C 406	FR JCT BOX COMPT.-ABS	AMP MNL	2	560900	560898
C 407					
C 408					
C 409	ENGINE CPT -LOW COOL. LEVEL	PED MP	2	------	562350
C 410	FR JCT BOX-DIODE CONNECTOR	AMP MNL	15	561987	561986
C 411	FR JCT BOX-DIODE CONNECTOR	AMP MNL	15	561987	561986
C 412	LH DASH PANEL-MASTER SWITCH SW	EATON	8	------	562763
C 413	ENG CPT-A/C HI UNLOAD PRS SW	PED WP	2	561566	561690
C 414					
C 415	RR JCT BOX – ENGINE SIGNAL	DEUTSCH	24	562280	562283
C 416					
C 417	FRONT JCT BOX-DIODES	AMP MNL	15	561987	561986
C 418	LH DASH PANEL-HTR WINDSH.SW	EATON	8	------	562763
C 419	FR JCT BOX-RETARDER OR JACOB	AMP MNL	3	561667	561550
C 420					
C 421					
C 422					
C 423					
C 424	UNDER INSTRUMENT PANEL CENTER	AMP MNL	3	561667	561550
C 425	FR JCT BOX-DIODES	AMP MNL	15	561987	561986
C 426	ENGINE COMPT. CLUTCH CTR FAN	PED WP	3	561781	561782
C 427	PRO-HEAT	PED-WP	2	561566	561680
C 428	PRO-HEAT	PED WP	6	561606	561607
C 429	FR JCT BOX COMPT.	AMP MNL	6	561552	561515
C 430	LH CONSOLE-TIMER	AMP FF	8	561188	562363
C 431	LH CONSOLE-PRE HEAT.	TAB AMP	1	561540	561539
C 432	ENGINE CPT.-PROX. SW. DOOR AJAR	PED-WP	2	561566	561680
C 433	FR SERVICE CPT. KNEEL. PRESS. SW	PED WP	2	561566	561690
C 434	FRONT JCT. BOX-DIODES	AMP MNL	15	561987	561986
C 435	FR SERVICE CPT.(RH) KNEEL. PIEZO	AMP MNL	2	560900	560898
C 436	RH HAT RACK-WCL CENTER ROOF ACC	AMP CPC	16	561639	561640
C 437	RH HAT RACK-WCL FR & RR SECT.	AMP CPC	24	561642	561643
C 438	EVAP CMPT- A/C CONTROL	AMP MNL	2	561248	561247
C 439	EVAP CMPT- A/C CONTROL	AMP MNL	2	561248	561247
C 440	EVAP CMPT- A/C CONTROL	DEUTSCH	4	562479	562477
C 441	FR JCT BOX- DIODES	AMP MNL	15	561987	561986
C 442					
C 443					
C 444					
C 445					
C 446					
C 447					
C 448					
C 449					
C 450	SOUND SYS. JCT. PANEL	MOLEX	4	562507	562503
C 451	WIRELESS MICRO-FIRST CPT BAG	MOLEX	2	562550	562549
C 452	UNDER DASH INSTR. PANEL	MOLEX	2	562550	562549
C 453	SOUND SYS. JCT.PANEL-VCP	PED WP	2	561566	561680

NO	LOCATION	TYPE	CAVITY	#PIN HOUSING	#SOCKET HOUSING
C 454	SOUND SYS.JCT.PAN.-FILT. VCP	PED WP	2	561566	561680
C 455	WIRELESS MICRO-LH HAT-RACK	MOLEX	6	------	562464
C 456	WORLD TRANSM.-RETARDER ACCUM.	PED MP	2	------	562427
C 457	WORLD TRANSM.-MAIN CONNECTOR	DEUTSCH	31	562572	562536
C 458	WORLD TRANSM.-TURBINE SP.SENS	PED MP	2	------	562426
C 459	WORLD TRANSM.-ENGINE SP.SENS.	PED MP	2	------	562426
C 460	WORLD TRANSM.-SPEED SENSOR	ITT	2	------	562541
C 461	WORLD TRANSM.-RETARDER TEMP.	PED MP	2	561566	561680
C 462	WORLD TRANSM.-RETARD SOL."K"	PED MP	2	------	562426
C 463	WORLD TRANSM.-SENSOR CONN.	DEUTSCH	16	562570	562571
C 464	RR JCT BOX-DDR CONNECTOR	DEUTSCH	6	------	562360
C 465	LH CONSOLE-SHIFTER SELECTOR	PED	20	------	562825
C 466	FR SERVICE CPT.-RESIS. MOD.	PED WP	3	------	562428
C 467	FR SERVICE CPT.-RESIS. MOD.	PED WP	3	------	562428
C 468			8		
C 469					
C 470	FR LH UPPER WHELL CPT-SILENT 1000	AMP MNL	2	561248	561247
C 471	FR LH UPPER WHELL CPT-SILENT 1000	AMP MNL	2	561248	561247
C 472	FR LH UPPER WHELL CPT-SILENT 1000	PED WP	2	561566	561690
C 473	FR LH UPPER WHELL CPT-SILENT 1000	AMP MNL	3	561667	561550
C 474	DRIVER CPT.-TEMP. SENSOR	AMP MNL	2	561247	561248
C 475	RR JCT BOX-SPEED SIGN CONNECTOR	DEUTSCH	2	562486	562485
C 476					
C 477					
C 478	ELECTRONIC DESTINATION SIGN	AMP CPC	9	561636	561637
C 479	HVAC MODULE	MOLEX	3		562783
C 480	UNDER DASH LH-DR. FAN SPEED CTR. MOD	PED	4	561889	561890
C 481	UNDER DASH LH-DR. FAN SPEED CTR. MOD	PED	3	561781	561782
C 482					
C 483	FR SERVICE CPT. (NOT USED)	PED PC	2	------	562237
C 484	UNDER DASH LH.-FOOT DAMPER MOTOR	PED PC	2	------	562076
C 485	UNDER DASH LH.-DASH & DEFR. DAM.MOT.	AMP MNL	3	561667	561550
C 486					
C 487	S.S.PANEL – AUDIO IN AMPLI	MOLEX	4	------	563071
C 488	S.S.PANEL – AMPLI SIGNAL	MOLEX	8	------	562465
C 489	S.S.PANEL – SPEAKER OUTLET	MOLEX	6	------	562464
C 490					
C 491					
C 492					
C 493					
C 494					
C 495					
C 496					
C 497					
C 498					
C 499					
C 500	FR LH UPPER WHELL CPT -PRODRIVER	MOLEX	6	562070	562069
C 501	FR LH UPPER WHELL CPT -PRODRIVER	PED MP	7	562433	------
C 502	LH DASH PANEL-PRE HEATER SW.	EATON	8	------	562763
C 503	LH CONSOLE-PRE HEATER SW.	EATON	2	------	561837
C 504	LH CONSOLE WEBASTO TIMER	AMP	8	------	562852
C 505	LH CONSOLE ESPAR TIMER	AMP	9	------	562681
C 506	FR JCT BOX CPT. DIGITAL CLOCK	AMP	4	561685	561687
C 507	FR SECT. LH HAT-RACK DIG. CLOCK	MOLEX	4	561477	561476
C 508	RR JCT BOX-FAN CLUTCH RETARDER	AMP MNL	6	561552	561515
C 509	FR LH UPPER WHELL CPT -DATA LOGGER	PED MP	16	------	562530
C 510	FR LH UPPER WHELL CPT -DATA LOGGER	DEUTSCH	9	562531	------
C 511	FR LH UPPER WHELL CPT -DATA LOGGER	PED MP	4	562532	------
C 512	FR LH UPPER WHELL CPT -DATA LOGGER	PED MP	10	562533	------
C 513	FR LH UPPER WHELL CPT -DATA LOGGER	AMP MNL	3	561667	561550
C 514	FR LH UPPER WHELL CPT -DATA LOGGER	PED MP	6	562433	562417
C 515	FR JCT BOX CPT.-INTERCOM	MOLEX	4	561477	561476
C 516	FR JCT BOX CPT.-INTERCOM	MOLEX	6	562070	562069
C 517	LAVATORY WALL-INTERCOM	MOLEX	6	562070	562069
C 519	UNDER DASH RH-SEDAN DOOR	HUMPHREY	2	------	562580
C 520	UNDER DASH RH-SEDAN DOOR	HUMPHREY	2	------	641385
C 521	UNDER DASH RH-SEDAN DOOR	HUMPHREY	2	------	641385

CONNECTORS CODE

NO	LOCATION	TYPE	CAVITY	#PIN HOUSING	#SOCKET HOUSING
C 522					
C 523	FR JCT BOX-FUSE BLOCK	PED	8	562647	562646
C 524	FR JCT BOX-FUSE BLOCK	PED	8	562647	562646
C 525	FR JCT BOX-FUSE BLOCK	PED	8	562647	562646
C 526	FR JCT BOX-FUSE BLOCK	PED	8	562647	562646
C 527	FR JCT BOX-FUSE BLOCK	PED	8	562647	562646
C 528	FR JCT BOX-FUSE BLOCK	PED	8	562647	562646
C 529	FR JCT BOX-12V OUTLET	AMP MNL	2	561247	561248
C 530	RR JCT BOX-FUSE BLOCK	PED	8	562647	562646
C 531	RR JCT BOX-FUSE BLOCK	PED	8	562610	---
C 532	RR JCT BOX-FUSE BLOCK	PED	8	562610	---
C 533	RR JCT BOX-FUSE BLOCK	PED	8	562647	562646
C 534	RR JCT BOX-FUSE BLOCK	PED	8	562647	562646
C 535	RR JCT BOX-FIRE MODULE DETECT.	AMP MNL	3	561667	561550
C 536	UNDER DASH RH-DRIVER'S HTR TEMP. CTR	AMP MNL	6	561552	561515
C 537	BATT. CPT.-A/C PRESS. SIGN. RLY	AMP MNL	2	561248	561247
C 538	FR SERVICE CPT.-OUTSIDE TEMP. SENSOR	AMP MNL	2	561248	561247
C 539	HVAC DASH MODULE OUTPUT CON	MOLEX	24		562780
C 540	HVAC DASH MODULE INPUT CON	MOLEX	22		562781
C 541	SOUND SYS. JCT PANEL-AUDIO SEAT SYS.	PED WP	2	561566	561690
C 542	LH HAT RACK-AUDIO SEAT SYSTEM	AMP MNL	3	561667	561550
C 543					
C 544	SOUND SYS JCT PANEL-AUDIO SEAT SYS.	PED WP	3	561781	562428
C 545	LH HAT RACK-AUDIO SEAT SYSTEM	AMP MNL	3	561667	561550
C 546	WIRELESS MIC. CHARGING SYSTEM	MOLEX	2	--------	563025
C 547	RH DASH PANEL-ACCESSORIES	AMP CPC	37	561645	561646
C 548	LH DASH PANEL-T.T. LT. TEST SW.	EATON	8	------	562763
C 549	LH DASH PANEL-FAN CLUTCH OVERR. SW	EATON	8	------	562763
C 550	LAST LUGG. CPT. -WCL RICON	AMP CPC	16	561694	561695
C 551	LAST LUGG. CPT. -WCL RICON	AMP CPC	16	561694	561695
C 552	LAST LUGG. CPT. -WCL RICON	AMP CPC	9	561636	561637
C 553	UNDER DASH R.H. - CONTROL. HEAD	MOLEX	16	---------	562559
C 554	UNDER DASH R.H. - CONTROL. HEAD	MOLEX	16	---------	562559
C 555	UNDER DASH R.H. - CONTROL. HEAD	MOLEX	16	---------	562559
C 556	UNDER DASH R.H. - RADIO ACC.	MOLEX	2	562550	562549
C 557	UNDER DASH R.H. - RADIO ACC.	MOLEX	9	562556	562555
C 558	UNDER DASH R.H. - RADIO ACC.	MOLEX	4	562507	562503
C 559	SOUND SYS. JCT. PANEL – FILTER AMPLI	PED WP	2	561566	561690
C 560	SOUND SYS. JCT. PANEL – POWER AMPLI	MOLEX	4	562507	562503
C 561	L.H. HAT RACK - WIRELESS MICRO	MOLEX	8		562465
C 562	L.H. HAT RACK - VCP	MOLEX	12	562556	563070
C 563	L.H MODESTY PANEL - DRIVERS SPK.	MOLEX	4	562507	562503
C 564	L.H MODESTY PANEL - MICRO	MOLEX	4	562507	562503
C 565	R.H MODESTY PANEL - MICRO	MOLEX	4	562507	562503
C 566	L.H. CONSOLE - BOOM MICRO	MOLEX	4	562507	562503
C 567	L.H. CONSOLE - DRIVERS MICRO	MOLEX	4	562507	562503
C 568	SOUND SYS. JCT. PANEL - PASS. SPK	CINCH	4	562553	562552
C 569	SOUND SYS. JCT. PANEL - POWER AMPLI.	MOLEX	9	562556	562555
C 570	UNDER DASH PANEL TTLT	MOLEX	6		562464
C 571	UNDER DASH PANEL TTLT	MOLEX	20		562778
C 572	UNDER DASH PANEL TTLT	MOLEX	18		562779
C 573	UNDER DASH PANEL TTLT	MOLEX	8		562465
C 574	HAT -RACK FLUOR. INDIRECT LIGHTING	MOLEX	6	---------	562759
C 575	HAT -RACK FLUOR. INSTATION LIGHT	MOLEX	4	562507	562503
C 576	HAT -RACK FLUOR. INDIRECT LIGHTING	AMP MNL	3	561667	561550
C 577	HAT -RACK FLUOR. INDIRECT LIGHTING	AMP MNL	3	561667	561550
C 578	HAT -RACK FLUOR. INSTATION LIGHT	MOLEX	4	562507	562503
C 579	L.H HAT RACK – VCP POWER	MOLEX	4		563071
C 580	RH DASH PANEL-HAT RACK FAN SW	EATON	8	--------	562763
C 581					
C 582	FRONT SERVICE CMPT. - WINDOWS AJAR	PED WP	2	561566	561690
C 583	L.H. DASH PANEL - MASTER KEY	DEUTSCH	2	562486	562485
C 584	FRONT SERVICE CMPT. - AIR HORH	HUMPHREY	3	--------	641385
C 585					
C 586					
C 587	LH PARCEL RACK DVD UNIT	MOLEX	4	563040	563071
C 588	FRONT SERVICE CPT. CENTER SOUND SYS.	CONNXALL	9	563163	563089

NO	LOCATION	TYPE	CAVITY	#PIN HOUSING	#SOCKET HOUSING
C 589	UNDER DASH - L.H. MIRROR	CONNXALL	9	563163	563089
C 590	UNDER DASH - R.H. MIRROR	AMP MNL	9	561670	561669
C 591	L.H.CONSOLE - MIRROR L.H.	EURAMTEC	8	--------	562799
C 592	L.H.CONSOLE - MIRROR R.H.	EURAMTEC	8	--------	562799
C 593	BATTERY CMPT. - CHARGER	PED WP	3	561781	561782
C 594	FRONT ROOF - DRIVERS LIGHT	LEEKRAFT		---------	562803
C 595	DASH CENTER MODULE - OPEN DOOR	MOLEX	4	561477	561476
C 596	DASH CENTER MODULE - CLOSE DOOR	MOLEX	4	561477	561476
C 597	L.H. DASH PANEL - DISPLAY SET SW.	MOLEX	5		562812
C 598	L.H. DASH PANEL - DISPLAY SET SW.	MOLEX	5		562812
C 599	UND.DASH-MAGN.SW.CTR POS. DR'S AIR	AMP MNL	2	561248	561247
C 600	ENGINE CPT.-A/C LOW PRESS SW. UNLOAD	PED	2	562348	562471
C 601	L.H. ROOF - WINDOW AJAR	AMP MNL	2	561248	561247
C 602	L.H. ROOF - WINDOW AJAR	MOLEX	4	561477	561476
C 603	R.H. ROOF - WINDOW AJAR	AMP MNL	2	561248	561247
C 604	LH PARCEL RACK DVD VIDEO STABILIZER	SWITCHCRAFT	1	563074	
C 605	HAT RACK - MOTOR FAN	PED	2	560997	561030
C 606	HAT RACK - MOTOR FAN	PED	2	560997	561030
C 607					
C 608	FRONT SERVICE CMPT. SPEED SIGNAL	PED WP	2	561566	561690
C 609	LAVATORY - NIGHT LIGHT				
C 610					
C 611	HAT RACK READING LTS RICON	MOLEX	6	562558	562557
C 612	HAT -RACK FLUOR. INSTATION LTS RICON	MOLEX	4	562507	562503
C 613	HAT -RACK INDIRECT LTS RICON	AMP MNL	3	561667	561550
C 614	HAT -RACK INDIRECT LTS RICON	AMP MNL	3	561667	561550
C 615	LH PARCEL RACK DVD SING ALONG ADAPT.	MOLEX	2	562550	562549
C 616					
C 701	ZF TRANSMISSION ECU	KOSTAL	20		
C 702	SHIFT SELECTOR – LH CONSOLE	AMP	14		563338
C 712	NEUTRAL SWITCH ON ZF TRANSM. (TOP)	AMP	4		563340
C 714	OUTPUT SENSOR ON ZF TRANSM. (BOTTOM)	AMP	4		563340
C 717	BATT. CPT - MAIN CONNECTOR	AMP CPC	22	561642	561643
C 720	ENGINE COMPT – BLKHD CONNECTOR	DEUTSCH	31	563359	563358
C 721	LH CONSOLE – ZF TESTMAN DIAGNOSTIC	AMP MNL	6	563356	
C 723	ENGINE COMPT – FOR TRANSM.	DEUTSCH	3		562884
C 736	ENGINE COMPT – ZMTEC MODULE	PACKARD	30	563053	
C 740	DRIVE AXLE – EASY START SOL VALVE	LEONI	2	--	641949
C 742	BATT. CPT – FUSE BLOCK	AMP	8	562446	
C 745	FR SERV.COMPT – THROTTLE POS. SENSOR	PED WP	3	561781	
C 760	FR SERV. COMPT – TO J1939	DEUTSCH	3		
C 761	FR SERV. COMPT – TO J1939	DEUTSCH	3		562884
C 762	ENGINE COMPT – TO J1939	DEUTSCH	3		562884
C 763	ENGINE COMPT – TO J1939	DEUTSCH	3		562884
C 764	ENGINE COMPT – TO J1939	DEUTSCH	3		562884
C 765	ENGINE COMPT – TO J1939	DEUTSCH	3		562884
C 766	ENGINE COMPT – TO J1939	DEUTSCH	3		562884
C X	CLUSTER	JAE	22		562766
C Y	CLUSTER	JAE	30		562767
L X	CLUSTER	JAE	22		562764
L					
R					

CONNECTORS CODE

NO	LOCATION	TYPE	CAVITY	#PIN HOUSING	#SOCKET HOUSING
AA1	BEHIND DASH - SONALERT	BOSCH	5		561183
AA2	BEHIND DASH - SONALERT	BOSCH	5		561183
C X1	FR SERVICE COMPT- ECU ABS	AMP	15		563200
C X2	FR SERVICE COMPT- ECU ABS	AMP	18		563201
C RXTX	HVAC DASN MODULE COMMUNICATION	MOLEX	3	563206	562873
C S	RR JCT BOX ECU WORLD TR.	PED	32		562817
C T	RR JCT BOX ECU WORLD TR.	PED	32		562824
C TCI	ENGINE CPT – DDEC V TURBO TEMP.	FCI	2		563404
C V	RR JCT BOX ECU WORLD TR.	PED	32		562823
C WX1	ENGINE CPT-WEBASTO PRE-HEAT WATER	AMP SEALED	7		563135
C WX3	ENGINE CPT-WEBASTO PRE-HEAT WATER	AMP SEALED	7	563134	
C Y	CLUSTER	JAE	30	---	562765
C 1	FR JCT BOX COMPARTMENT	AMP CPC	14	561585	561584
C 2	FR JCT BOX COMPARTMENT	AMP CPC	16	561639	561640
C 3	FR JCT BOX COMPARTMENT	AMP CPC	24	561641	561643
C 4	FR JCT BOX COMPARTMENT	AMP CPC	37	561644	561646
C 5	FR SERVICE COMPT.-UNDERNEATH	AMP CPC	37	561644	561646
C 6	FR SERVICE COMPT.-UNDERNEATH	AMP CPC	16	561639	561640
C 7					
C 8	FR SERVICE COMPT.-UNDERNEATH	AMP CPC	24	561641	561643
C 9	FR SERVICE COMPT.-UNDERNEATH	AMP CPC	24	561641	561643
C 10	LUGGAGE COMPT. WATER BOOSTER PUMP	PED	2	562348	562471
C 11	FR SERVICE COMPARTMENT	AMP CPC	37	561644	561646
C 12	FR SERVICE COMPARTMENT	AMP CPC	16	561639	561640
C 13	LH CONSOLE-CTR MIRROR	AMP MNL	6	561552	561515
C 14	UNDER DASH-LH MIRROR	AMP MNL	9	561661	561662
C 15	A/C CLUTCH	PED WP	2	561566	561690
C 16	LH CONSOLE SW-CRUISE ON OFF	EATON	10	------	562763
C 17	LH CONSOLE SW-CRUISE RESUME	EATON	10	------	562763
C 18	LH CONSOLE SW-CRUISE SET	EATON	10	------	562763
C 19	LH CONSOLE DECEL SW	EATON	10	------	562763
C 20	RR JCT BOX	DEUTSCH	70	562282	562285
C 21	RR JCT BOX	DEUTSCH	24	562280	562283
C 22	RR JCT BOX - EATON TRANSM.	AMP MNL	6	561552	561515
C 23					
C 24					
C 25					
C 26	HYD & MAN TRANSM.-NEUT.& B/U	PED WP	4	561610	561611
C 27	HYD & MAN TRANSM.-SPEED SENS.	PED WP	2	561566	561690
C 28	EATON TRANSMISSION	DEUTCH	3	562877	562884
C 29	EATON TRANSMISSION	PED MP	6	562878	------
C 30	RR JCT BOX - ECU EATON TRANSM.	PED MP	32	------	562866
C 31	RR JCT BOX - ECU EATON TRANSM.	PED MP	24	------	562865
C 32	DDEC ENGINE-ECM	AMP	68	------	563403
C 33	RR JCT BOX - EATON TRANSM.	DEUTCH	9	562531	------
C 34	RH. CONSOLE - EATON TRANSM. SHIFTER	PED MP	3	------	562871
C 35	RR JCT BOX	DEUTCH	40	562281	562284
C 36	RH. CONSOLE - EATON TRANSM. SHIFTER	PED MP	24	------	562874
C 37	RR SECTION-LH HAT RACK	MOLEX	6	562558	562557
C 38	RR SECTION-RH HAT RACK	MOLEX	6	562558	562557
C 39	LH CONSOLE - EATON TRANSM. DISPLAY	AMP MNL	4	561551	561668
C 40	RR JCT BOX - EATON TRANSM. J1939	DEUTCH	3	562877	562884
C 41	LAVATORY ROOF LIGHT	LEECRAFT	2	-----	562803
C 42	LAVATORY BACK WALL-WTR TANK	AMP MNL	2	560900	560898
C 43	LAVATORY BACK WALL-ACCES.	AMP MNL	9	561661	561662
C 44	EATON TRANSM. J1939	DEUTCH	3	562877	562884
C 45	FR JCT BOX COMPARTMENT	AMP CPC	24	561642	561643
C 46	EATON TRANSM. J1939	DEUTCH	3	562877	562884
C 47	FR SERVICE COMPARTMENT	AMP CPC	16	561694	561695
C 48	FR. SERVICE CMPT.PRESS SW PARKBREAK	PED WP	2	561566	561690
C 49	BATTERIE COMPT.-LT	AMP MNL	2	561248	561247
C 50	FR SERVICE COMPT.-LOW BUOY	PED WP	1	561605	561577
C 51					
C 52	RR JCT BOX	AMP CPC	24	561642	561643
C 53	SPARE TIRE COMPT ENTRANCE STEP LIGHT	DEUTCH	2	562486	562485
C 54	SPARE TIRE COMPT ENTRANCE STEP LIGHT	DEUTCH	2	562486	562485
C 55	RH SWITCH PANEL	AMP CPC	9	561636	561637

NO	LOCATION	TYPE	CAVITY	#PIN HOUSING	#SOCKET HOUSING
C 56	HAT RACK- MOTOR FAN	MOLEX	6	562558	562557
C 57	HAT RACK- MOTOR FAN	MOLEX	6	562558	562557
C 58	RR JCT BOX AC PANEL	DEUTSCH	24	562280	562283
C 59	RR JCT BOX AC PANEL	AMP CPC	14	561584	561583
C 60	RR JCT BOX COMPT.-LT	AMP MNL	2	561248	561247
C 61	LUGGAGE COMPARTMENT LTS	AMP MNL	2	561248	561247
C 62	LUGGAGE COMPARTMENT LTS	AMP MNL	2	561248	561247
C 63	LUGGAGE COMPARTMENT LTS	AMP MNL	2	561248	561247
C 64	LUGGAGE COMPARTMENT LTS	AMP MNL	2	561248	561247
C 65	LUGGAGE COMPARTMENT LTS	AMP MNL	2	561248	561247
C 66	LUGGAGE COMPARTMENT LTS	AMP MNL	2	561248	561247
C 67	LUGGAGE COMPARTMENT LTS	AMP MNL	2	561248	561247
C 68	LUGGAGE COMPARTMENT LTS	AMP MNL	2	561248	561247
C 69	RR AXLE ACC-INSIDE PVC END	PED WP	6	561568	561578
C 70	LH CONSOLE	AMP CPC	16	561642	561643
C 71	FR JCT BOX COMPARTMENT	AMP CPC	37	561645	561646
C 72	FR JCT BOX COMPARTMENT	AMP CPC	24	561642	561643
C 73	DASH CENTER PANEL	AMP CPC	16	561639	561640
C 74	FR JCT BOX COMPARTMENT	AMP CPC	37	561645	561646
C 75	SERV CPT. RXT. ENT. DOOR SW	DEUTSCH	4	562479	562477
C 76	LUGGAGE COMPT.-AIR RET.SENS.	AMP MNL	2	561248	561247
C 77	LUGGAGE COMPT.-AIR RET.SENS.	AMP MNL	2	561248	561247
C 78					
C 79					
C 80	LUGGAGE COMPT.-AIR RET.SENS.	AMP MNL	2	561248	561247
C 81	PASSENGER COMPT.-AISLE LTS	AMP MNL	2	560900	560898
C 82	ENTRANCE DOOR	MOLEX	6	562070	562069
C 83	ENTRANCE DOOR-PROIMITY SW	MOLEX	4	561477	561476
C 84	ENTRANCE DOOR-PRESSURE SW	PED WP	2	561566	561690
C 85	UNDER INSTRUMENT PANEL LH	AMP MTA-100	------	562248	------
C 86					
C 87	RR END ROOF	AMP CPC	9	561636	561637
C 88	FR. SERVICE CMPT.PRESS SW PARK BRAKE	PED WP	2	561566	561690
C 89	RR END ROOF-B/U NONITOR	AMP CPC	4	561582	561581
C 90	RR JCT BOX	AMP CPC	15	561987	561986
C 91	RR JCT BOX	AMP CPC	37	561714	561713
C 92	FR LH UPPER WHELL CPT-ABS	AMP CPC	9	561635	561637
C 93	FR LH UPPER WHELL CPT-ABS		35	------	641094
C 94	RH CONSOLE ENTRANCE STEP LIGHT	DEUTCH	2	562486	562485
C 95	CONDENSOR CPT - LIQ. SOL. VALVE	PED WP	2	561566	561690
C 96	FR AXLE ACCESSORIES	AMP CPC	14	561585	561585
C 97	RR AXLE ACC-INSIDE PVC END	PED WP	6	561568	561578
C 98	FR SERVICE COMPT-EL.FT.PEDAL	PED WP	3	561782	561781
C 99	FR SERVICE COMPT LTS	AMP MNL	2	561248	561247
C 100	LH CONSOLE – 120 VOLTS SWITCH	EATON	8	------	562763
C 101	FR SERVICE COMPT-ELEC. HORNS	PED WP	2	561566	561690
C 102	SIDE (LH/FR & CENTER) DIR. LTS	GROTE	2	------	562155
C 103	SIDE (LH/FR & CENTER) MARKER LTS	GROTE	2	------	562155
C 104	SIDE (RH/FR & CENTER) DIR. LTS	DEUTSCH	4	562479	562477
C 104	FR SERV & SIDE CPT-FLASH. RH	GROTE	2	------	562155
C 105	FR SERVICE COMPT-LIQ.S.VALVE	PED WP	2	561566	561690
C 106	FR SERVICE COMPT-WATER VALVE	PED WP	2	561566	561690
C 107					
C 108	FR SERVICE COMPT-KNEEL.SYS	PED WP	2	561566	561690
C 109	FR SERVICE COMPT-KNEEL.SYS	PED WP	2	561566	561690
C 110	FR SERVICE COMPT-KNEEL.SYS	PED WP	2	561566	561690
C 111	EVAPORATOR COMPT-DAMPER	DEUTSCH	2	562486	562485
C 112	LAVATORY BACK WALL-FLUSH PUMP SW.	DEUTSCH	4	562479	562477
C 113	SIDE (LH/RR) MARKER LTS	GROTE	2	------	562155
C 114	SIDE (LH/RR) DIR LTS	GROTE	2	------	562155
C 115					
C 116	ENGINE COMPT. LTS	GROTE	2		563268
C 117	SIDE (RH/RR) MARKER LTS	GROTE	2	------	562155
C 117	FR SRV. COMPT. KNEELING UP SOL VALVE	PED WP	2	561761	
C 118	ENGINE COMPT-LAVATORY FAN	PED WP	2	561566	561690
C 119	ENGINE CPT RR DOOR RH LO LAMP	PED WP	6	561606	561607
C 120	ENGINE CPT RR DOOR LH LO LAMP	PED WP	6	561606	561607

CONNECTORS CODE

NO	LOCATION	TYPE	CAVITY	#PIN HOUSING	#SOCKET HOUSING
C 121	SIDE (RH/RR) DIR. LTS	GROTE	2	------	562155
C 122					
C 123	TAG AXLE-UNLOAD TAG RH VALVE	PED WP	2	561566	561690
C 124	ENGINE CPT-ETHER SW	PED WP	2	561566	561690
C 125	ENGINE CPT-B/U ALARM	PED WP	2	561566	561690
C 126	ENGINE CPT-FLUSHING PUMP	PED WP	2	561566	561690
C 127	ENGINE CPT-FUEL FILTER	PED WP	2	561566	561690
C 128	ENGINE CPT-A/C COMPR.CLUTCH	ITT SS	2	561813	561812
C 129					
C 130	ENGINE CPT-UNLOADER	ITT SS	2	561813	561812
C 131	ENGINE CPT-UNLOADER	ITT SS	2	561813	561812
C 132	ENGINE CPT-A/C LO PRESS SW	PED WP	2	561566	561690
C 133	ENGINE CPT-A/C HI PRESS SW	PED WP	2	561566	561690
C 134	FR JCT BOX-LUGGAGE DIODE CON.	AMP MNL	15	561987	561986
C 135	FR JCT BOX-LUGGAGE DIODE CON.	AMP MNL	15	561987	561986
C 136	RR JCT BOX - A/C PANEL DIODE CONN.	AMP MNL	15	561987	561986
C 137	RR JCT BOX-TRANSMITTER	AMP MNL	2	560900	560898
C 138	RR JCT BOX-CONTROL MODULE	AMP HDP	15	------	562012
C 139	RR JCT BOX-LOGIC MODULE	AMP HDP	15	562011	------
C 140	HVAC DASH MODULE THERMOMETER	MOLEX	4		562782
C 141	INSTRUMENT PANEL LH UNLOAD TAG	AMP	2	561248	561247
C 142	LAVATORY DOOR WALL	AMP MNL	2	561248	561247
C 143					
C 144	UNDER LH SEAT-AISLE LTS	AMP MNL	4	560851	560852
C 145	RR JCT BOX CPT-RR SIDE LTS	AMP MNL	9	561670	561669
C 146	ENGINE CPT-MODULATOR VALVE	AMPHENOL	2	------	560412
C 147	BATT & RR J.B.CPT-DOCK.LTS	PED WP	2	561566	561690
C 148					
C 149	CONDENSER CPT-FAN MOTOR	ORDNANCE	3	562555	562001
C 150					
C 151	EVAPORATOR CPT-THERMOSTAT	ITT SS	2	561813	562159
C 152	CONDENSER CPT-FUEL GAUGE	PED WP	4	561610	561611
C 153	EVAPORATOR CPT-AIR AMB. SENS	AMP MNL	2	561248	561247
C 154	EVAPORATOR CPT-FRESH AIR SENS	ITT SS	2	561813	561812
C 155	EVAPORATOR CPT-WATER VALVE	PNEUMAC	4	563204	
C 156	EVAPOR. CPT-BYPASS WATER VAL.	PED WP	2	561566	561690
C 157					
C 158	CONDENSER CPT-A/C LO TEMP.	PED WP	2	561566	561690
C 159	CONDENSER CPT-A/C HI TEMP.	PED WP	2	561566	561690
C 160	FR AXLE-ABS RH SENSOR	WABCO	2	641132	------
C 161	FR AXLE-ABS RH VALVE	WABCO	3	------	641098
C 162	FR AXLE-ABS LH VALVE	WABCO	3	------	641098
C 163	FR AXLE-ABS LH SENSOR	WABCO	2	641132	------
C 164	RR AXLE-ABS LH SENSOR	WABCO	2	641132	------
C 165	RR AXLE-ABS LH VALVE	WABCO	3	------	641098
C 166	RR AXLE-ABS RH VALVE	WABCO	3	------	641098
C 167	RR AXLE-ABS RH SENSOR	DEUTSCH	2	641132	------
C 168	RR AXLE-ABS OPT ATC	PED WP	2	561566	561690
C 169	RR JCT BOX-SPEED SW	AMP HDP	15	------	562012
C 170	FR JCT BOX-FLASHER UNIT	TC	2	------	561940
C 171	LH CONSOLE	AMP CPC	24	561642	561643
C 172					
C 173					
C 174	UNDER DASH RH-HTR MODULE	AMP MNL	9	561670	561669
C 175	UNDER DASH RH-HTR MODULE	AMP MNL	9	561670	561669
C 176	UNDER DASH RH-WIPER PULSE	AMP FF	6	------	561186
C 177	UNDER DASH RH-WIPER MOTOR	AMP FF	6	------	561186
C 178	UNDER DASH RH-LH FAN	TC	2	561030	560997
C 179	UNDER DASH RH-RH FAN	TC	2	561030	560997
C 180	RR JCT BOX-DIODE CONNECTOR	AMP MNL	15	561987	561986
C 181	RR JCT BOX-DIODE CONNECTOR	AMP MNL	15	561987	561986
C 182					
C 183	FR SERVICE CPT-KNEELING PAN.	PED WP	4	561610	561611
C 184	FR SERVICE CPT-KNEELING SW	ITT SS	3	561111	561080
C 185					
C 186					
C 186M	RR JCT BOX CPT.-SPD SIGN. M.TR	PED WP	2	561566	561690

NO	LOCATION	TYPE	CAVITY	#PIN HOUSING	#SOCKET HOUSING
C 186W	RR JCT BOX CPT.-SPD SIGN. WT	PED WP	2	561566	561690
C 187	FR JCT BOX-RPM RESISTOR CON.	AMP MNL	6	561552	561515
C 188	KNEELING UP ALARM – NJ COACHE ONLY	AMP MNL	15	561987	561986
C 189	ENGINE CPT RR DOOR B/U LT	TRUCK-LITE	2	------	562755
C 190	ENGINE CPT RR DOOR TAIL/ STOP LT	SUPER SEAL	3		562601
C 191	ENGINE CPT RR DOOR RH TAIL/STOP LT	SUPER SEAL	3		562601
C 192	ENGINE CPT RR DOOR DIR. LT	SUPER SEAL	3		562601
C 193					
C 194					
C 195					
C 198	ENGINE CPT RR DOOR LICENCE LT	PED WP	2	562348	562471
C 199					
C 200	RH HAT RACK-FLUORESCENT	AMP MNL	2	561248	561247
C 201	RH HAT RACK-FLUORESCENT	AMP MNL	2	561248	561247
C 202	RH HAT RACK-INDIRECT LIGHTING	MOLEX	2	---------	562758
C 203	RH HAT RACK-INDIRECT LIGHTING	MOLEX	6	---------	562759
C 204	RH HAT RACK-GENERAL LT	AMP MNL	2	560900	560898
C 205	FR SECT.-RH HAT RACK SPEAKER	AMP MNL	9	561661	561662
C 206	RH HAT RACK-READING LT	AMP FF	4	----------	562756
C 207	LH HAT RACK-READING LT	AMP FF	4	----------	562756
C 208	LH HAT RACK-BALLAST	MOLEX	2	----------	562758
C 209	LH HAT RACK HOTESS CHIME	AMP MNL	3	561667	561550
C 210	FR SECT.-LH HAT RACK SPEAKER	AMP MNL	9	561661	561662
C 211	FR ROOF-STORE LH	AMP MNL	2	560900	560898
C 212	FR ROOF-STORE RH	AMP MNL	2	560900	560898
C 213					
C 214	ENGINE CPT J1922				
C 215	TAG AXLE - A.T.C. SYSTEM				
C 216	TAG AXLE - A.T.C. SYSTEM				
C 217	RH DASH PANEL-FRONT CAMERA SW	EATON	8	--------	562763
C 218	RH DASH PANEL-FRONT CAMERA SW	AMP MNL	2	560900	560898
C 219	ENGINE CMPT. – FIRE DETECTOR	DEUTSCH	2	562486	562485
C 220	RR.JCT.BOX-FUEL PRIME PUMP	TC	1	561070	561073
C 221	BATTERY CMPT. FIRE DETECTOR	DEUTSCH	2	562486	562485
C 222	ENGINE CMPT. FIRE DETCTOR	DEUTSCH	2	562486	562485
C 223	ENGINE CMPT. FIRE DETCTOR	DEUTSCH	2	562486	562485
C 224	ENGINE CMPT. -VORAD J1939	DEUTSCH	3	562877	562884
C 225	ENGINE CMPT. -VORAD J1939	DEUTSCH	3	562877	562884
C 226	FR LH UPPER WHEEL CPT-VORAD J1939	DEUTSCH	3	562677	562884
C 227					
C 228	ENG.CPT.- A/C COMPRESSOR	PED WP	2	561566	561690
C 229					
C 230	ENG.CPT.-FUEL PRIME PUMP FEED	DEUTSCH	2	562486	562485
C 231	ENG.CPT.-FUEL PRIME PUMP SW.	PED WP	2	561566	561690
C 232	ENG.CPT.-FUEL PRIME PUMP	PED WP	2	561566	561690
C 233	FR. SERVICE COMPT.	VDO	8		562043
C 234	FR. SERVICE COMPT.	VDO	8		562044
C 235	FR. SERVICE COMPT.	VDO	8		562041
C 236	LUGGAGE COMPARTEMENT	AMP MNL	4	560851	560852
C 237	UNDER DASH LH-JACOB CLUTCH SW	ITT SS	3	561111	561080
C 238	UNDER DASH LH-PASS. REC. DAMPER SW	EATON	8	------	562763
C 239	FR SERVICE CPT-HI BUOY VALVE	PED WP	2	561566	561690
C 240	FR SERVICE CPT-KNEEL PROX SW	PED WP	3	561781	562428
C 241	HEADLAMPS HI BEAM	HELLA	2		562623
C 242	HALOGEN HEAHLAMPS LO BEAM	HELLA	2		562623
C 242	XENON HEADLAMPS LO BEAM	DELPHI	2		563366
C 243	FRONT CAP- HEADLIGHTS MAIN CONN	DEUTCH	6	565131	562789
C 244	FR SERVICE CPT-LH FOG LAMP	DEUTCH	2	562902	562901
C 245	FR SERVICE CPT-RH FOG LAMP	DEUTCH	2	562902	562901
C 246	UNDER DASH - L.H. MIRROR	CONNXALL	5	563196	563090
C 247	HEADLAMPS MARK & DIR LTS	AMP SUPER S	3		562601
C 248	FR JCT BOX-WIPER PULSE GEN	AMP FF	6	------	561108
C 249					
C 250	LH CONSOL PANEL- LOW BOY	PED	2	561566	561690
C 251	LH DASH PANEL-FAST IDLE SW	EATON	8	------	562763
C 252					
C 253	LH DASH PANEL-ETHER SW	EATON	8	------	562763

CONNECTORS CODE

NO	LOCATION	TYPE	CAVITY	#PIN HOUSING	#SOCKET HOUSING
C 254	INST. PANEL RH-ENTR.DOOR SW.	TORRIX	5	------	562110
C 255	LH DASH PANEL-JACOB & RETARDER SW	EATON	8	------	562763
C 256					
C 257					
C 258	LH SW PANEL-MULTI FUNC. SW	AMP FF	8	561188	------
C 259	LH SW PANEL-MULTI FUNC. SW	AMP FF	6	------	561108
C 260	FR SERVICE CPT-LUG DOOR LCK	PED WP	6	561606	561607
C 261	UNDER DASH RH-DOOR MODULE	AMP MNL	9	561670	561669
C 262	UNDER DASH RH-DOOR MODULE	AMP MNL	4	561551	561668
C 263	UNDER DASH RH-DOOR MODULE	AMP MNL	3	561667	561550
C 264	UNDER DASH RH-DOOR MODULE	AMP MNL	3	561667	561550
C 265	UNDER DASH RH-DOOR MODULE	AMP HDP-20	15	562011	562012
C 266					
C 267	UNDER DASH RH	AMP CPC	24	561642	561643
C 268					
C 269	UNDER DASH - R.H. MIRROR	CONNXALL	5	563196	563090
C 270	LH MIRROR POST	MOLEX	6	562070	562069
C 271	RH MIRROR POST	MOLEX	6	562070	562069
C 272	LH MIRROR	SPARTAN	6	------	990158
C 273	RH MIRROR	SPARTAN	6	------	990158
C 274	RR. JCT. BOX – SIGNAL ALT. MODULE	AMP MNL	12	561735	561734
C 275	UNDER DASH RH-DOOR MODULE	AMP MNL	9	561670	561669
C 276	UNDER DASH RH-LOCK SOL.VALVE	AMP MNL	2	561248	561247
C 277					
C 278					
C 279 *	FR SERVICE CPT.- STEERING ZF	DEUTCH	2		562486
C 279	UNDER DASH CYLINDER READ SW.	AMP MNL	2	561248	561247
C 280	LH CONSOLE-UNLOAD TAG SW.	NGR	10	------	562763
C 281					
C 282					
C 283					
C 284	LH DR'S ROOF - MONITOR FEED	PED WP	3	561781	561782
C 285	LH DR'S ROOF – SOUND SYSTEM	AMP CPC	24	561642	561643
C 286	RH SW PANEL-A/C & HEAT	EATON	8	------	562763
C 287	ENGINE COMPT-LTS SW	PED WP	2	561566	561690
C 288	RH SW PANEL-FRESH AIR	EATON	8	------	562763
C 289					
C 290					
C 291					
C 292	LH PARCEL RACK VIDEO PANEL– MONITOR	MOLEX	4	563040	563071
C 293	LH PARCEL RACK VIDEO PAN. – RCA RELAY	AMP MNL	2	561248	561247
C 294	LH PARCEL RACK VIDEO PAN.– RCA RELAY	AMP MNL	2	561248	561247
C 295	LH PARCEL RACK VID. PANEL– AMPLI VIDEO	MOLEX	4	563040	563071
C 296	LH PARCEL RACK VIDEO PAN. – MICRO SIGNAL	MOLEX	4	562507	562503
C 297	INSTRUMENT PANEL RH -LTS	AMP MNL	2	560900	560898
C 298					
C 299	RH DASH PANEL SW-GALLEY	EATON	8	------	562763
C 300	FR SERVICE CPT.- LOW BEAM RESISTORS	PED WP	2	561566	561690
C 301	FR SERVICE CPT.- DR'S FAN SPEED	PED WP	1	561605	561577
C 302					
C 303					
C 304					
C 305					
C 306					
C 307					
C 308	LH CONSOLE SW-RHEOSTAT	TC	2	561030	560997
C 309					
C 310	LH DASH PANEL -LUG. DOOR LCK SW	EATON	8	------	562763
C 311	RH DASH PANEL -HOS & PAS CHIME SW	EATON	8	------	562763
C 312	RH DASH PANEL -READING LTS SW	EATON	8	------	562763
C 313	RH DASH PANEL -GEN & FLUOR LTS SW	EATON	8	------	562763
C 314	LH DASH PANEL-FR DEST. SIGN SW	EATON	8	------	562763
C 315	LH DASH PANEL-LH STORE SW	EATON	8	------	562763
C 316	LH CONSOLE SPARE SWITCH	EATON	8	------	562763
C 317	LH DASH PANEL-RH STORE SW	EATON	8	------	562763
C 318	LH CONSOLE SW-DRV WINDOW LIFT	EATON	8	------	562763
C 319					

NO	LOCATION	TYPE	CAVITY	#PIN HOUSING	#SOCKET HOUSING
C 320	RH DASH PANEL-DRIVER'S LTS SW	EATON	8	------	562763
C 321	READING LTS TEST				
C 322	LH CONSOLE DRV WIND LIFT MOT	PED PO	2	------	561848
C 323	LH CONSOLE CRUISE CTR SW PAN. AMP	CPC	9	561636	561637
C 324					
C 325	LH DASH PANEL-KNEELING SW	EATON	8	------	562763
C 326	ENGINE CMPT.	PED	4	------	561610
C 327	ENGINE CONTROL	DEUTSCH	6	562583	562581
C 328	GALLEY-LAMP	AMP MNL	2	561248	561247
C 329	ENGINE TACHO SIGNAL	PED WP	3	561781	561789
C 330					
C 331	GALLEY MICROWAVE SW	EATON	8	------	562763
C 332					
C 333	GALLEY RH CONTAINER SW	EATON	8	------	562763
C 334	GALLEY LH CONTAINER SW	EATON	8	------	562763
C 335					
C 336					
C 337	INSTR PANEL LH-UP WIPER SW	EATON	8	------	562763
C 338	INSTR PANEL LH-UP DEFROST SW	EATON	8	------	562763
C 339	INSTR PANEL LH-UP WASHER SW	EATON	8	------	562763
C 340	FR JCT. BOX FIRE PIEZO ALARM	AMP MNL	2	560900	560898
C 341	INSTR PANEL LH-HEAT MIRROR SW	EATON	8	------	562763
C 342	ENGINE RR START SW	DEUTSCH	2	562586	562585
C 343	INSTR PANEL LH-HEADLAMP SW	EATON	8	------	562763
C 344	INSTR PANEL LH-HAZARD LT SW	EATON	8	------	562763
C 345	INSTR PANEL LH-FOG LT SW	EATON	8	------	562763
C 346					
C 347	INSTR PANEL LH-DASH LT SW	AMP MNL	2	560900	560898
C 348	INSTR PANEL CENT-RACOR MODULE	MOLEX	6	562070	562067
C 349					
C 350	RH CONSOLE-THERMOMETER	AMP MNL	3	561667	561550
C 351	LH HAT RACK-FLUOR 110V	MOLEX	4	561477	561476
C 352	RH CONSOLE-DRV TEMP SENSOR	BURNDY	4	------	561104
C 353	INSTR PANEL RH-DRV FAN RHEOST	AMP MNL	6	561552	561515
C 354	INSTR PANEL RH-DRV TEMP CTR	AMP MNL	6	561552	561515
C 355	INSTR PANEL RH-FR TEMP CTR	AMP MNL	3	561667	561550
C 356					
C 357	INSTR PANEL RH-WATER TEMP GA	AMP MNL	3	561667	561550
C 358	INSTR PANEL RH-FUEL LEVEL GA	AMP MNL	3	561667	561550
C 359					
C 360					
C 361	FR ROOF-WIPER MOTOR	AMP FF	6	------	561186
C 362	FR ROOF-LAVATORY OCCUPIED LT	AMP MNL	2	561248	561247
C 363	FR ROOF-WATCH YOUR STEP LT	AMP MNL	2	561248	561247
C 364	FR ROOF-DESTINATION SIGN	AMP MNL	3	561667	561550
C 365	FR ROOF-UP WINDSHIELD DEFROST	AMP MNL	3	561667	561550
C 366	RH DASH PANEL-GRN & RED LEDS	AMP MNL	3	560908	562006
C 367	ENGINE COMPT-DIF OIL T SENSOR	PED WP	2	561566	561690
C 368	FR ROOF-DEST. SIGN BALLAST	AMP MNL	3	561667	561550
C 369	FR ROOF-DEST. SIGN OPER. SW	TORRIX	5	------	562110
C 370	FR ROOF-DEST. SIGN FLUOR.	AMP MNL	2	560900	560898
C 371	FR ROOF-DEST. SIGN FLUOR.	AMP MNL	2	560900	560898
C 372	FR ROOF-DEST. SIGN SPEED SW	MOLEX	4	561477	561476
C 373	FR ROOF-NO SMOKING LT	AMP MNL	2	561248	561247
C 374	LH SWITCH PANEL	AMP MNL	6	561552	561515
C 375					
C 376					
C 377	LH DASH PANEL-STOP ENG.OVERIDE SW	EATON	8	------	562763
C 378					
C 379					
C 380	LH CONSOLE-DDR CONNECTOR	DEUTSCH	6	562360	------
C 381					
C 382					
C 383					
C 384					
C 385	EVAPOTATOR COMP WATER PUMP	PED WP	2	561566	561690
C 386	LH DASH PANEL-WCL POWER SYSTEM SW	EATON	8	------	562763

CONNECTORS CODE

NO	LOCATION	TYPE	CAVITY	#PIN HOUSING	#SOCKET HOUSING
C 387	RR JCT BOX (WCL)	AMP MNL	9	561661	561662
C 388	RR JCT BOX (WCL)	AMP MNL	12	561735	561734
C 389	WCL REAR DOOR	MOLEX	4	561477	561476
C 390	LAVATORY WALL-WCL REMOTE CTR	EATON	8	------	562763
C 391	LAVATORY WALL-WCL LAMP	EATON	8	------	562763
C 392	LAVATORY WALL-WCL SW. LT.	EATON	2	------	561835
C 393	LAVATORY WALL-WCL REMOTE SYS.	AMP CPC	4	561686	561687
C 394	UNDER INSTR. PANEL- B/U MONITOR	AMP MNL	4	560851	560852
C 395	DRIVER'S COMPT. - B/U MONITOR	AMP	5	------	------
C 396	FR SECT. LH HAT RACK-SPEAKER	MOLEX	4	562507	562503
C 397	ENGINE COMPT. CRADLE ACC.	DEUTSCH	40	562281	562284
C 398	ENGINE COMPT. – PRE-EXITATION ALT.	PED WP	2	561566	561690
C 399					
C 400	ENGINE COMPT. BLOCK HEATER	PED MP	3	561781	561782
C 401					
C 402					
C 403	GALLEY FRIGO NORCOLD	AMP MNL	2	561248	561247
C 404	GALLEY LAMP	AMP MNL	2	561248	561247
C 405	LAST LUGGAGE COMP.- INVERTER SIGNAL	AMP MNL	2	561248	561247
C 406	FR JCT BOX COMPT.-ABS	AMP MNL	2	560900	560898
C 407					
C 408					
C 409	ENGINE CPT -LOW COOL. LEVEL	PED MP	2	------	562350
C 410	FR JCT BOX-DIODE CONNECTOR	AMP MNL	15	561987	561986
C 411	FR JCT BOX-DIODE CONNECTOR	AMP MNL	15	561987	561986
C 412	LH DASH PANEL-MASTER SWITCH SW	EATON	8	------	562763
C 413	ENG CPT-A/C HI UNLOAD PRS SW	PED WP	2	561566	561690
C 414					
C 415	RR JCT BOX – ENGINE SIGNAL	DEUTSCH	24	562280	562283
C 416					
C 417	FRONT JCT BOX-DIODES	AMP MNL	15	561987	561986
C 418	LH DASH PANEL-HTR WINDSH.SW	EATON	8	------	562763
C 419	FR JCT BOX-RETARDER OR JACOB	AMP MNL	3	561667	561550
C 420					
C 421					
C 422					
C 423					
C 424	UNDER INSTRUMENT PANEL CENTER	AMP MNL	3	561667	561550
C 425	FR JCT BOX-DIODES	AMP MNL	15	561987	561986
C 426	ENGINE COMPT. CLUTCH CTR FAN	PED WP	3	561781	561782
C 427	PRO-HEAT	PED-WP	2	561566	561680
C 428	PRO-HEAT	PED WP	6	561606	561607
C 429	FR JCT BOX COMPT.	AMP MNL	6	561552	561515
C 430	LH CONSOLE-TIMER	AMP FF	8	561188	562363
C 431	LH CONSOLE-PRE HEAT.	TAB AMP	1	561540	561539
C 432	ENGINE CPT.-PROX. SW. DOOR AJAR	PED-WP	2	561566	561680
C 433	FR SERVICE CPT. KNEEL. PRESS. SW	PED WP	2	561566	561690
C 434	FRONT JCT. BOX-DIODES	AMP MNL	15	561987	561986
C 435	FR SERVICE CPT.(RH) KNEEL. PIEZO	AMP MNL	2	560900	560898
C 436	RH HAT RACK-WCL CENTER ROOF ACC	AMP CPC	16	561639	561640
C 437	RH HAT RACK-WCL FR & RR SECT.	AMP CPC	24	561642	561643
C 438	EVAP CMPT- A/C CONTROL	AMP MNL	2	561248	561247
C 439	EVAP CMPT- A/C CONTROL	AMP MNL	2	561248	561247
C 440	EVAP CMPT- A/C CONTROL	DEUTSCH	4	562479	562477
C 441	FR JCT BOX- DIODES	AMP MNL	15	561987	561986
C 442					
C 443					
C 444					
C 445					
C 446					
C 447					
C 448					
C 449					
C 450	SOUND SYS. JCT. PANEL	MOLEX	4	562507	562503
C 451	WIRELESS MICRO-FIRST CPT BAG	MOLEX	2	562550	562549
C 452	UNDER DASH INSTR. PANEL	MOLEX	2	562550	562549
C 453	SOUND SYS. JCT.PANEL-VCP	PED WP	2	561566	561680

NO	LOCATION	TYPE	CAVITY	#PIN HOUSING	#SOCKET HOUSING
C 454	SOUND SYS.JCT.PAN.-FILT. VCP	PED WP	2	561566	561680
C 455	WIRELESS MICRO-LH HAT-RACK	MOLEX	6	------	562464
C 456	WORLD TRANSM.-RETARDER ACCUM.	PED MP	2	------	562427
C 457	WORLD TRANSM.-MAIN CONNECTOR	DEUTSCH	31	562572	562536
C 458	WORLD TRANSM.-TURBINE SP.SENS	PED MP	2	------	562426
C 459	WORLD TRANSM.-ENGINE SP.SENS.	PED MP	2	------	562426
C 460	WORLD TRANSM.-SPEED SENSOR	ITT	2	------	562541
C 461	WORLD TRANSM.-RETARDER TEMP.	PED MP	2	561566	561680
C 462	WORLD TRANSM.-RETARD SOL."K"	PED MP	2	------	562426
C 463	WORLD TRANSM.-SENSOR CONN.	DEUTSCH	16	562570	562571
C 464	RR JCT BOX-DDR CONNECTOR	DEUTSCH	6	------	562360
C 465	LH CONSOLE-SHIFTER SELECTOR	PED	20	------	562825
C 466	FR SERVICE CPT.-RESIS. MOD.	PED WP	3	------	562428
C 467	FR SERVICE CPT.-RESIS. MOD.	PED WP	3	------	562428
C 468			8		
C 469					
C 470	FR LH UPPER WHELL CPT-SILENT 1000	AMP MNL	2	561248	561247
C 471	FR LH UPPER WHELL CPT-SILENT 1000	AMP MNL	2	561248	561247
C 472	FR LH UPPER WHELL CPT-SILENT 1000	PED WP	2	561566	561690
C 473	FR LH UPPER WHELL CPT-SILENT 1000	AMP MNL	3	561667	561550
C 474	DRIVER CPT.-TEMP. SENSOR	AMP MNL	2	561247	561248
C 475	RR JCT BOX-SPEED SIGN CONNECTOR	DEUTSCH	2	562486	562485
C 476					
C 477					
C 478	ELECTRONIC DESTINATION SIGN	AMP CPC	9	561636	561637
C 479	HVAC MODULE	MOLEX	3		562783
C 480	UNDER DASH LH-DR. FAN SPEED CTR. MOD	PED	4	561889	561890
C 481	UNDER DASH LH-DR. FAN SPEED CTR. MOD	PED	3	561781	561782
C 482					
C 483	FR SERVICE CPT. (NOT USED)	PED PC	2	------	562237
C 484	UNDER DASH LH.-FOOT DAMPER MOTOR	PED PC	2	------	562076
C 485	UNDER DASH LH.-DASH & DEFR. DAM.MOT.	AMP MNL	3	561667	561550
C 486					
C 487	S.S.PANEL – AUDIO IN AMPLI	MOLEX	4	------	563071
C 488	S.S.PANEL – AMPLI SIGNAL	MOLEX	8	------	562465
C 489	S.S.PANEL – SPEAKER OUTLET	MOLEX	6	------	562464
C 490					
C 491					
C 492					
C 493					
C 494					
C 495					
C 496					
C 497					
C 498					
C 499					
C 500	FR LH UPPER WHELL CPT -PRODRIVER	MOLEX	6	562070	562069
C 501	FR LH UPPER WHELL CPT -PRODRIVER	PED MP	7	562433	------
C 502	LH DASH PANEL-PRE HEATER SW.	EATON	8	------	562763
C 503	LH CONSOLE-PRE HEATER SW.	EATON	2	------	561837
C 504	LH CONSOLE WEBASTO TIMER	AMP	8	------	562852
C 505	LH CONSOLE ESPAR TIMER	AMP	9	------	562681
C 506	FR JCT BOX CPT. DIGITAL CLOCK	AMP	4	561685	561687
C 507	FR SECT. LH HAT-RACK DIG. CLOCK	MOLEX	4	561477	561476
C 508	RR JCT BOX-FAN CLUTCH RETARDER	AMP MNL	6	561552	561515
C 509	FR LH UPPER WHELL CPT -DATA LOGGER	PED MP	16	------	562530
C 510	FR LH UPPER WHELL CPT -DATA LOGGER	DEUTSCH	9	562531	------
C 511	FR LH UPPER WHELL CPT -DATA LOGGER	PED MP	4	562532	------
C 512	FR LH UPPER WHELL CPT -DATA LOGGER	PED MP	10	562533	------
C 513	FR LH UPPER WHELL CPT -DATA LOGGER	AMP MNL	3	561667	561550
C 514	FR LH UPPER WHELL CPT -DATA LOGGER	PED MP	6	562433	562417
C 515	FR JCT BOX CPT.-INTERCOM	MOLEX	4	561477	561476
C 516	FR JCT BOX CPT.-INTERCOM	MOLEX	6	562070	562069
C 517	LAVATORY WALL-INTERCOM	MOLEX	6	562070	562069
C 519	UNDER DASH RH-SEDAN DOOR	HUMPHREY	2	------	562580
C 520	UNDER DASH RH-SEDAN DOOR	HUMPHREY	2	------	641385
C 521	UNDER DASH RH-SEDAN DOOR	HUMPHREY	2	------	641385

CONNECTORS CODE

NO	LOCATION	TYPE	CAVITY	#PIN HOUSING	#SOCKET HOUSING
C 522					
C 523	FR JCT BOX-FUSE BLOCK	PED	8	562647	562646
C 524	FR JCT BOX-FUSE BLOCK	PED	8	562647	562646
C 525	FR JCT BOX-FUSE BLOCK	PED	8	562647	562646
C 526	FR JCT BOX-FUSE BLOCK	PED	8	562647	562646
C 527	FR JCT BOX-FUSE BLOCK	PED	8	562647	562646
C 528	FR JCT BOX-FUSE BLOCK	PED	8	562647	562646
C 529	FR JCT BOX-12V OUTLET	AMP MNL	2	561247	561248
C 530	RR JCT BOX-FUSE BLOCK	PED	8	562647	562646
C 531	RR JCT BOX-FUSE BLOCK	PED	8	562610	---
C 532	RR JCT BOX-FUSE BLOCK	PED	8	562610	---
C 533	RR JCT BOX-FUSE BLOCK	PED	8	562647	562646
C 534	RR JCT BOX-FUSE BLOCK	PED	8	562647	562646
C 535	RR JCT BOX-FIRE MODULE DETECT.	AMP MNL	3	561667	561550
C 536	UNDER DASH RH-DRIVER'S HTR TEMP. CTR	AMP MNL	6	561552	561515
C 537	BATT. CPT.-A/C PRESS. SIGN. RLY	AMP MNL	2	561248	561247
C 538	FR SERVICE CPT.-OUTSIDE TEMP. SENSOR	AMP MNL	2	561248	561247
C 539	HVAC DASH MODULE OUTPUT CON	MOLEX	24		562780
C 540	HVAC DASH MODULE INPUT CON	MOLEX	22		562781
C 541	SOUND SYS. JCT PANEL-AUDIO SEAT SYS.	PED WP	2	561566	561690
C 542	LH HAT RACK-AUDIO SEAT SYSTEM	AMP MNL	3	561667	561550
C 543					
C 544	SOUND SYS JCT PANEL-AUDIO SEAT SYS.	PED WP	3	561781	562428
C 545	LH HAT RACK-AUDIO SEAT SYSTEM	AMP MNL	3	561667	561550
C 546	WIRELESS MIC. CHARGING SYSTEM	MOLEX	2	--------	563025
C 547	RH DASH PANEL-ACCESSORIES	AMP CPC	37	561645	561646
C 548	LH DASH PANEL-T.T. LT. TEST SW.	EATON	8	------	562763
C 549	LH DASH PANEL-FAN CLUTCH OVERR. SW	EATON	8	------	562763
C 550	LAST LUGG. CPT. -WCL RICON	AMP CPC	16	561694	561695
C 551	LAST LUGG. CPT. -WCL RICON	AMP CPC	16	561694	561695
C 552	LAST LUGG. CPT. -WCL RICON	AMP CPC	9	561636	561637
C 553	UNDER DASH R.H. - CONTROL. HEAD	MOLEX	16	---------	562559
C 554	UNDER DASH R.H. - CONTROL. HEAD	MOLEX	16	---------	562559
C 555	UNDER DASH R.H. - CONTROL. HEAD	MOLEX	16	---------	562559
C 556	UNDER DASH R.H. - RADIO ACC.	MOLEX	2	562550	562549
C 557	UNDER DASH R.H. - RADIO ACC.	MOLEX	9	562556	562555
C 558	UNDER DASH R.H. - RADIO ACC.	MOLEX	4	562507	562503
C 559	SOUND SYS. JCT. PANEL – FILTER AMPLI	PED WP	2	561566	561690
C 560	SOUND SYS. JCT. PANEL – POWER AMPLI	MOLEX	4	562507	562503
C 561	L.H. HAT RACK - WIRELESS MICRO	MOLEX	8		562465
C 562	L.H. HAT RACK - VCP	MOLEX	12	562556	563070
C 563	L.H MODESTY PANEL - DRIVERS SPK.	MOLEX	4	562507	562503
C 564	L.H MODESTY PANEL - MICRO	MOLEX	4	562507	562503
C 565	R.H MODESTY PANEL - MICRO	MOLEX	4	562507	562503
C 566	L.H. CONSOLE - BOOM MICRO	MOLEX	4	562507	562503
C 567	L.H. CONSOLE - DRIVERS MICRO	MOLEX	4	562507	562503
C 568	SOUND SYS. JCT. PANEL - PASS. SPK	CINCH	4	562553	562552
C 569	SOUND SYS. JCT. PANEL - POWER AMPLI.	MOLEX	9	562556	562555
C 570	UNDER DASH PANEL TTLT	MOLEX	6		562464
C 571	UNDER DASH PANEL TTLT	MOLEX	20		562778
C 572	UNDER DASH PANEL TTLT	MOLEX	18		562779
C 573	UNDER DASH PANEL TTLT	MOLEX	8		562465
C 574	HAT -RACK FLUOR. INDIRECT LIGHTING	MOLEX	6	---------	562759
C 575	HAT -RACK FLUOR. INSTATION LIGHT	MOLEX	4	562507	562503
C 576	HAT -RACK FLUOR. INDIRECT LIGHTING	AMP MNL	3	561667	561550
C 577	HAT -RACK FLUOR. INDIRECT LIGHTING	AMP MNL	3	561667	561550
C 578	HAT -RACK FLUOR. INSTATION LIGHT	MOLEX	4	562507	562503
C 579	L.H HAT RACK – VCP POWER	MOLEX	4		563071
C 580	RH DASH PANEL-HAT RACK FAN SW	EATON	8	--------	562763
C 581					
C 582	FRONT SERVICE CMPT. - WINDOWS AJAR	PED WP	2	561566	561690
C 583	L.H. DASH PANEL - MASTER KEY	DEUTSCH	2	562486	562485
C 584	FRONT SERVICE CMPT. - AIR HORH	HUMPHREY	3	--------	641385
C 585					
C 586					
C 587	LH PARCEL RACK DVD UNIT	MOLEX	4	563040	563071
C 588	FRONT SERVICE CPT. CENTER SOUND SYS.	CONNXALL	9	563163	563089

NO	LOCATION	TYPE	CAVITY	#PIN HOUSING	#SOCKET HOUSING
C 589	UNDER DASH - L.H. MIRROR	CONNXALL	9	563163	563089
C 590	UNDER DASH - R.H. MIRROR	AMP MNL	9	561670	561669
C 591	L.H.CONSOLE - MIRROR L.H.	EURAMTEC	8	--------	562799
C 592	L.H.CONSOLE - MIRROR R.H.	EURAMTEC	8	--------	562799
C 593	BATTERY CMPT. - CHARGER	PED WP	3	561781	561782
C 594	FRONT ROOF - DRIVERS LIGHT	LEEKRAFT		---------	562803
C 595	DASH CENTER MODULE - OPEN DOOR	MOLEX	4	561477	561476
C 596	DASH CENTER MODULE - CLOSE DOOR	MOLEX	4	561477	561476
C 597	L.H. DASH PANEL - DISPLAY SET SW.	MOLEX	5		562812
C 598	L.H. DASH PANEL - DISPLAY SET SW.	MOLEX	5		562812
C 599	UND.DASH-MAGN.SW.CTR POS. DR'S AIR	AMP MNL	2	561248	561247
C 600	ENGINE CPT.-A/C LOW PRESS SW. UNLOAD	PED	2	562348	562471
C 601	L.H. ROOF - WINDOW AJAR	AMP MNL	2	561248	561247
C 602	L.H. ROOF - WINDOW AJAR	MOLEX	4	561477	561476
C 603	R.H. ROOF - WINDOW AJAR	AMP MNL	2	561248	561247
C 604	LH PARCEL RACK DVD VIDEO STABILIZER	SWITCHCRAFT	1	563074	
C 605	HAT RACK - MOTOR FAN	PED	2	560997	561030
C 606	HAT RACK - MOTOR FAN	PED	2	560997	561030
C 607					
C 608	FRONT SERVICE CMPT. SPEED SIGNAL	PED WP	2	561566	561690
C 609	LAVATORY - NIGHT LIGHT				
C 610					
C 611	HAT RACK READING LTS RICON	MOLEX	6	562558	562557
C 612	HAT -RACK FLUOR. INSTATION LTS RICON	MOLEX	4	562507	562503
C 613	HAT -RACK INDIRECT LTS RICON	AMP MNL	3	561667	561550
C 614	HAT -RACK INDIRECT LTS RICON	AMP MNL	3	561667	561550
C 615	LH PARCEL RACK DVD SING ALONG ADAPT.	MOLEX	2	562550	562549
C 616					
C 701	ZF TRANSMISSION ECU	KOSTAL	20		
C 702	SHIFT SELECTOR – LH CONSOLE	AMP	14		563338
C 712	NEUTRAL SWITCH ON ZF TRANSM. (TOP)	AMP	4		563340
C 714	OUTPUT SENSOR ON ZF TRANSM. (BOTTOM)	AMP	4		563340
C 717	BATT. CPT - MAIN CONNECTOR	AMP CPC	22	561642	561643
C 720	ENGINE COMPT – BLKHD CONNECTOR	DEUTSCH	31	563359	563358
C 721	LH CONSOLE – ZF TESTMAN DIAGNOSTIC	AMP MNL	6	563356	
C 723	ENGINE COMPT – FOR TRANSM.	DEUTSCH	3		562884
C 736	ENGINE COMPT – ZMTEC MODULE	PACKARD	30	563053	
C 740	DRIVE AXLE – EASY START SOL VALVE	LEONI	2	--	641949
C 742	BATT. CPT – FUSE BLOCK	AMP	8	562446	
C 745	FR SERV.COMPT – THROTTLE POS. SENSOR	PED WP	3	561781	
C 760	FR SERV. COMPT – TO J1939	DEUTSCH	3		
C 761	FR SERV. COMPT – TO J1939	DEUTSCH	3		562884
C 762	ENGINE COMPT – TO J1939	DEUTSCH	3		562884
C 763	ENGINE COMPT – TO J1939	DEUTSCH	3		562884
C 764	ENGINE COMPT – TO J1939	DEUTSCH	3		562884
C 765	ENGINE COMPT – TO J1939	DEUTSCH	3		562884
C 766	ENGINE COMPT – TO J1939	DEUTSCH	3		562884
C X	CLUSTER	JAE	22		562766
C Y	CLUSTER	JAE	30		562767
L X	CLUSTER	JAE	22		562764
L					
R					

CONNECTORS CODE

NO	LOCATION	TYPE	CAVITY	#PIN HOUSING	#SOCKET HOUSING
AA1	BEHIND DASH - SONALERT	BOSCH	5		561183
AA2	BEHIND DASH - SONALERT	BOSCH	5		561183
C X1	FR SERVICE COMPT- ECU ABS	AMP	15		563200
C X2	FR SERVICE COMPT- ECU ABS	AMP	18		563201
C RXTX	HVAC DASN MODULE COMMUNICATION	MOLEX	3	563206	562873
C S	RR JCT BOX ECU WORLD TR.	PED	32		562817
C T	RR JCT BOX ECU WORLD TR.	PED	32		562824
C TCI	ENGINE CPT – DDEC V TURBO TEMP.	FCI	2		563404
C V	RR JCT BOX ECU WORLD TR.	PED	32		562823
C WX1	ENGINE CPT-WEBASTO PRE-HEAT WATER	AMP SEALED	7		563135
C WX3	ENGINE CPT-WEBASTO PRE-HEAT WATER	AMP SEALED	7	563134	
C Y	CLUSTER	JAE	30	---	562765
C 1	FR JCT BOX COMPARTMENT	AMP CPC	14	561585	561584
C 2	FR JCT BOX COMPARTMENT	AMP CPC	16	561639	561640
C 3	FR JCT BOX COMPARTMENT	AMP CPC	24	561641	561643
C 4	FR JCT BOX COMPARTMENT	AMP CPC	37	561644	561646
C 5	FR SERVICE COMPT.-UNDERNEATH	AMP CPC	37	561644	561646
C 6	FR SERVICE COMPT.-UNDERNEATH	AMP CPC	16	561639	561640
C 7					
C 8	FR SERVICE COMPT.-UNDERNEATH	AMP CPC	24	561641	561643
C 9	FR SERVICE COMPT.-UNDERNEATH	AMP CPC	24	561641	561643
C 10	LUGGAGE COMPT. WATER BOOSTER PUMP	PED	2	562348	562471
C 11	FR SERVICE COMPARTMENT	AMP CPC	37	561644	561646
C 12	FR SERVICE COMPARTMENT	AMP CPC	16	561639	561640
C 13	LH CONSOLE-CTR MIRROR	AMP MNL	6	561552	561515
C 14	UNDER DASH-LH MIRROR	AMP MNL	9	561661	561662
C 15	A/C CLUTCH	PED WP	2	561566	561690
C 16	LH CONSOLE SW-CRUISE ON OFF	EATON	10	------	562763
C 17	LH CONSOLE SW-CRUISE RESUME	EATON	10	------	562763
C 18	LH CONSOLE SW-CRUISE SET	EATON	10	------	562763
C 19	LH CONSOLE DECEL SW	EATON	10	------	562763
C 20	RR JCT BOX	DEUTSCH	70	562282	562285
C 21	RR JCT BOX	DEUTSCH	24	562280	562283
C 22	RR JCT BOX - EATON TRANSM.	AMP MNL	6	561552	561515
C 23					
C 24					
C 25					
C 26	HYD & MAN TRANSM.-NEUT.& B/U	PED WP	4	561610	561611
C 27	HYD & MAN TRANSM.-SPEED SENS.	PED WP	2	561566	561690
C 28	EATON TRANSMISSION	DEUTCH	3	562877	562884
C 29	EATON TRANSMISSION	PED MP	6	562878	------
C 30	RR JCT BOX - ECU EATON TRANSM.	PED MP	32	------	562866
C 31	RR JCT BOX - ECU EATON TRANSM.	PED MP	24	------	562865
C 32	DDEC ENGINE-ECM	AMP	68	------	563403
C 33	RR JCT BOX - EATON TRANSM.	DEUTCH	9	562531	------
C 34	RH. CONSOLE - EATON TRANSM. SHIFTER	PED MP	3	------	562871
C 35	RR JCT BOX	DEUTCH	40	562281	562284
C 36	RH. CONSOLE - EATON TRANSM. SHIFTER	PED MP	24	------	562874
C 37	RR SECTION-LH HAT RACK	MOLEX	6	562558	562557
C 38	RR SECTION-RH HAT RACK	MOLEX	6	562558	562557
C 39	LH CONSOLE - EATON TRANSM. DISPLAY	AMP MNL	4	561551	561668
C 40	RR JCT BOX - EATON TRANSM. J1939	DEUTCH	3	562877	562884
C 41	LAVATORY ROOF LIGHT	LEECRAFT	2	-----	562803
C 42	LAVATORY BACK WALL-WTR TANK	AMP MNL	2	560900	560898
C 43	LAVATORY BACK WALL-ACCES.	AMP MNL	9	561661	561662
C 44	EATON TRANSM. J1939	DEUTCH	3	562877	562884
C 45	FR JCT BOX COMPARTMENT	AMP CPC	24	561642	561643
C 46	EATON TRANSM. J1939	DEUTCH	3	562877	562884
C 47	FR SERVICE COMPARTMENT	AMP CPC	16	561694	561695
C 48	FR. SERVICE CMPT.PRESS SW PARKBREAK	PED WP	2	561566	561690
C 49	BATTERIE COMPT.-LT	AMP MNL	2	561248	561247
C 50	FR SERVICE COMPT.-LOW BUOY	PED WP	1	561605	561577
C 51					
C 52	RR JCT BOX	AMP CPC	24	561642	561643
C 53	SPARE TIRE COMPT ENTRANCE STEP LIGHT	DEUTCH	2	562486	562485
C 54	SPARE TIRE COMPT ENTRANCE STEP LIGHT	DEUTCH	2	562486	562485
C 55	RH SWITCH PANEL	AMP CPC	9	561636	561637

NO	LOCATION	TYPE	CAVITY	#PIN HOUSING	#SOCKET HOUSING
C 56	HAT RACK- MOTOR FAN	MOLEX	6	562558	562557
C 57	HAT RACK- MOTOR FAN	MOLEX	6	562558	562557
C 58	RR JCT BOX AC PANEL	DEUTSCH	24	562280	562283
C 59	RR JCT BOX AC PANEL	AMP CPC	14	561584	561583
C 60	RR JCT BOX COMPT.-LT	AMP MNL	2	561248	561247
C 61	LUGGAGE COMPARTMENT LTS	AMP MNL	2	561248	561247
C 62	LUGGAGE COMPARTMENT LTS	AMP MNL	2	561248	561247
C 63	LUGGAGE COMPARTMENT LTS	AMP MNL	2	561248	561247
C 64	LUGGAGE COMPARTMENT LTS	AMP MNL	2	561248	561247
C 65	LUGGAGE COMPARTMENT LTS	AMP MNL	2	561248	561247
C 66	LUGGAGE COMPARTMENT LTS	AMP MNL	2	561248	561247
C 67	LUGGAGE COMPARTMENT LTS	AMP MNL	2	561248	561247
C 68	LUGGAGE COMPARTMENT LTS	AMP MNL	2	561248	561247
C 69	RR AXLE ACC-INSIDE PVC END	PED WP	6	561568	561578
C 70	LH CONSOLE	AMP CPC	16	561642	561643
C 71	FR JCT BOX COMPARTMENT	AMP CPC	37	561645	561646
C 72	FR JCT BOX COMPARTMENT	AMP CPC	24	561642	561643
C 73	DASH CENTER PANEL	AMP CPC	16	561639	561640
C 74	FR JCT BOX COMPARTMENT	AMP CPC	37	561645	561646
C 75	SERV CPT. RXT. ENT. DOOR SW	DEUTSCH	4	562479	562477
C 76	LUGGAGE COMPT.-AIR RET.SENS.	AMP MNL	2	561248	561247
C 77	LUGGAGE COMPT.-AIR RET.SENS.	AMP MNL	2	561248	561247
C 78					
C 79					
C 80	LUGGAGE COMPT.-AIR RET.SENS.	AMP MNL	2	561248	561247
C 81	PASSENGER COMPT.-AISLE LTS	AMP MNL	2	560900	560898
C 82	ENTRANCE DOOR	MOLEX	6	562070	562069
C 83	ENTRANCE DOOR-PROIMITY SW	MOLEX	4	561477	561476
C 84	ENTRANCE DOOR-PRESSURE SW	PED WP	2	561566	561690
C 85	UNDER INSTRUMENT PANEL LH	AMP MTA-100	------	562248	------
C 86					
C 87	RR END ROOF	AMP CPC	9	561636	561637
C 88	FR. SERVICE CMPT.PRESS SW PARK BRAKE	PED WP	2	561566	561690
C 89	RR END ROOF-B/U NONITOR	AMP CPC	4	561582	561581
C 90	RR JCT BOX	AMP CPC	15	561987	561986
C 91	RR JCT BOX	AMP CPC	37	561714	561713
C 92	FR LH UPPER WHELL CPT-ABS	AMP CPC	9	561635	561637
C 93	FR LH UPPER WHELL CPT-ABS		35	------	641094
C 94	RH CONSOLE ENTRANCE STEP LIGHT	DEUTCH	2	562486	562485
C 95	CONDENSOR CPT - LIQ. SOL. VALVE	PED WP	2	561566	561690
C 96	FR AXLE ACCESSORIES	AMP CPC	14	561585	561585
C 97	RR AXLE ACC-INSIDE PVC END	PED WP	6	561568	561578
C 98	FR SERVICE COMPT-EL.FT.PEDAL	PED WP	3	561782	561781
C 99	FR SERVICE COMPT LTS	AMP MNL	2	561248	561247
C 100	LH CONSOLE – 120 VOLTS SWITCH	EATON	8	------	562763
C 101	FR SERVICE COMPT-ELEC. HORNS	PED WP	2	561566	561690
C 102	SIDE (LH/FR & CENTER) DIR. LTS	GROTE	2	------	562155
C 103	SIDE (LH/FR & CENTER) MARKER LTS	GROTE	2	------	562155
C 104	SIDE (RH/FR & CENTER) DIR. LTS	DEUTSCH	4	562479	562477
C 104	FR SERV & SIDE CPT-FLASH. RH	GROTE	2	------	562155
C 105	FR SERVICE COMPT-LIQ.S.VALVE	PED WP	2	561566	561690
C 106	FR SERVICE COMPT-WATER VALVE	PED WP	2	561566	561690
C 107					
C 108	FR SERVICE COMPT-KNEEL.SYS	PED WP	2	561566	561690
C 109	FR SERVICE COMPT-KNEEL.SYS	PED WP	2	561566	561690
C 110	FR SERVICE COMPT-KNEEL.SYS	PED WP	2	561566	561690
C 111	EVAPORATOR COMPT-DAMPER	DEUTSCH	2	562486	562485
C 112	LAVATORY BACK WALL-FLUSH PUMP SW.	DEUTSCH	4	562479	562477
C 113	SIDE (LH/RR) MARKER LTS	GROTE	2	------	562155
C 114	SIDE (LH/RR) DIR LTS	GROTE	2	------	562155
C 115					
C 116	ENGINE COMPT. LTS	GROTE	2		563268
C 117	SIDE (RH/RR) MARKER LTS	GROTE	2	------	562155
C 117	FR SRV. COMPT. KNEELING UP SOL VALVE	PED WP	2	561761	
C 118	ENGINE COMPT-LAVATORY FAN	PED WP	2	561566	561690
C 119	ENGINE CPT RR DOOR RH LO LAMP	PED WP	6	561606	561607
C 120	ENGINE CPT RR DOOR LH LO LAMP	PED WP	6	561606	561607

CONNECTORS CODE

NO	LOCATION	TYPE	CAVITY	#PIN HOUSING	#SOCKET HOUSING
C 121	SIDE (RH/RR) DIR. LTS	GROTE	2	------	562155
C 122					
C 123	TAG AXLE-UNLOAD TAG RH VALVE	PED WP	2	561566	561690
C 124	ENGINE CPT-ETHER SW	PED WP	2	561566	561690
C 125	ENGINE CPT-B/U ALARM	PED WP	2	561566	561690
C 126	ENGINE CPT-FLUSHING PUMP	PED WP	2	561566	561690
C 127	ENGINE CPT-FUEL FILTER	PED WP	2	561566	561690
C 128	ENGINE CPT-A/C COMPR.CLUTCH	ITT SS	2	561813	561812
C 129					
C 130	ENGINE CPT-UNLOADER	ITT SS	2	561813	561812
C 131	ENGINE CPT-UNLOADER	ITT SS	2	561813	561812
C 132	ENGINE CPT-A/C LO PRESS SW	PED WP	2	561566	561690
C 133	ENGINE CPT-A/C HI PRESS SW	PED WP	2	561566	561690
C 134	FR JCT BOX-LUGGAGE DIODE CON.	AMP MNL	15	561987	561986
C 135	FR JCT BOX-LUGGAGE DIODE CON.	AMP MNL	15	561987	561986
C 136	RR JCT BOX - A/C PANEL DIODE CONN.	AMP MNL	15	561987	561986
C 137	RR JCT BOX-TRANSMITTER	AMP MNL	2	560900	560898
C 138	RR JCT BOX-CONTROL MODULE	AMP HDP	15	------	562012
C 139	RR JCT BOX-LOGIC MODULE	AMP HDP	15	562011	------
C 140	HVAC DASH MODULE THERMOMETER	MOLEX	4		562782
C 141	INSTRUMENT PANEL LH UNLOAD TAG	AMP	2	561248	561247
C 142	LAVATORY DOOR WALL	AMP MNL	2	561248	561247
C 143					
C 144	UNDER LH SEAT-AISLE LTS	AMP MNL	4	560851	560852
C 145	RR JCT BOX CPT-RR SIDE LTS	AMP MNL	9	561670	561669
C 146	ENGINE CPT-MODULATOR VALVE	AMPHENOL	2	------	560412
C 147	BATT & RR J.B.CPT-DOCK.LTS	PED WP	2	561566	561690
C 148					
C 149	CONDENSER CPT-FAN MOTOR	ORDNANCE	3	562555	562001
C 150					
C 151	EVAPORATOR CPT-THERMOSTAT	ITT SS	2	561813	562159
C 152	CONDENSER CPT-FUEL GAUGE	PED WP	4	561610	561611
C 153	EVAPORATOR CPT-AIR AMB. SENS	AMP MNL	2	561248	561247
C 154	EVAPORATOR CPT-FRESH AIR SENS	ITT SS	2	561813	561812
C 155	EVAPORATOR CPT-WATER VALVE	PNEUMAC	4	563204	
C 156	EVAPOR. CPT-BYPASS WATER VAL.	PED WP	2	561566	561690
C 157					
C 158	CONDENSER CPT-A/C LO TEMP.	PED WP	2	561566	561690
C 159	CONDENSER CPT-A/C HI TEMP.	PED WP	2	561566	561690
C 160	FR AXLE-ABS RH SENSOR	WABCO	2	641132	------
C 161	FR AXLE-ABS RH VALVE	WABCO	3	------	641098
C 162	FR AXLE-ABS LH VALVE	WABCO	3	------	641098
C 163	FR AXLE-ABS LH SENSOR	WABCO	2	641132	------
C 164	RR AXLE-ABS LH SENSOR	WABCO	2	641132	------
C 165	RR AXLE-ABS LH VALVE	WABCO	3	------	641098
C 166	RR AXLE-ABS RH VALVE	WABCO	3	------	641098
C 167	RR AXLE-ABS RH SENSOR	DEUTSCH	2	641132	------
C 168	RR AXLE-ABS OPT ATC	PED WP	2	561566	561690
C 169	RR JCT BOX-SPEED SW	AMP HDP	15	------	562012
C 170	FR JCT BOX-FLASHER UNIT	TC	2	------	561940
C 171	LH CONSOLE	AMP CPC	24	561642	561643
C 172					
C 173					
C 174	UNDER DASH RH-HTR MODULE	AMP MNL	9	561670	561669
C 175	UNDER DASH RH-HTR MODULE	AMP MNL	9	561670	561669
C 176	UNDER DASH RH-WIPER PULSE	AMP FF	6	------	561186
C 177	UNDER DASH RH-WIPER MOTOR	AMP FF	6	------	561186
C 178	UNDER DASH RH-LH FAN	TC	2	561030	560997
C 179	UNDER DASH RH-RH FAN	TC	2	561030	560997
C 180	RR JCT BOX-DIODE CONNECTOR	AMP MNL	15	561987	561986
C 181	RR JCT BOX-DIODE CONNECTOR	AMP MNL	15	561987	561986
C 182					
C 183	FR SERVICE CPT-KNEELING PAN.	PED WP	4	561610	561611
C 184	FR SERVICE CPT-KNEELING SW	ITT SS	3	561111	561080
C 185					
C 186					
C 186M	RR JCT BOX CPT.-SPD SIGN. M.TR	PED WP	2	561566	561690

NO	LOCATION	TYPE	CAVITY	#PIN HOUSING	#SOCKET HOUSING
C 186W	RR JCT BOX CPT.-SPD SIGN. WT	PED WP	2	561566	561690
C 187	FR JCT BOX-RPM RESISTOR CON.	AMP MNL	6	561552	561515
C 188	KNEELING UP ALARM – NJ COACHE ONLY	AMP MNL	15	561987	561986
C 189	ENGINE CPT RR DOOR B/U LT	TRUCK-LITE	2	------	562755
C 190	ENGINE CPT RR DOOR TAIL/ STOP LT	SUPER SEAL	3		562601
C 191	ENGINE CPT RR DOOR RH TAIL/STOP LT	SUPER SEAL	3		562601
C 192	ENGINE CPT RR DOOR DIR. LT	SUPER SEAL	3		562601
C 193					
C 194					
C 195					
C 198	ENGINE CPT RR DOOR LICENCE LT	PED WP	2	562348	562471
C 199					
C 200	RH HAT RACK-FLUORESCENT	AMP MNL	2	561248	561247
C 201	RH HAT RACK-FLUORESCENT	AMP MNL	2	561248	561247
C 202	RH HAT RACK-INDIRECT LIGHTING	MOLEX	2	---------	562758
C 203	RH HAT RACK-INDIRECT LIGHTING	MOLEX	6	---------	562759
C 204	RH HAT RACK-GENERAL LT	AMP MNL	2	560900	560898
C 205	FR SECT.-RH HAT RACK SPEAKER	AMP MNL	9	561661	561662
C 206	RH HAT RACK-READING LT	AMP FF	4	----------	562756
C 207	LH HAT RACK-READING LT	AMP FF	4	----------	562756
C 208	LH HAT RACK-BALLAST	MOLEX	2	----------	562758
C 209	LH HAT RACK HOTESS CHIME	AMP MNL	3	561667	561550
C 210	FR SECT.-LH HAT RACK SPEAKER	AMP MNL	9	561661	561662
C 211	FR ROOF-STORE LH	AMP MNL	2	560900	560898
C 212	FR ROOF-STORE RH	AMP MNL	2	560900	560898
C 213					
C 214	ENGINE CPT J1922				
C 215	TAG AXLE - A.T.C. SYSTEM				
C 216	TAG AXLE - A.T.C. SYSTEM				
C 217	RH DASH PANEL-FRONT CAMERA SW	EATON	8	--------	562763
C 218	RH DASH PANEL-FRONT CAMERA SW	AMP MNL	2	560900	560898
C 219	ENGINE CMPT. – FIRE DETECTOR	DEUTSCH	2	562486	562485
C 220	RR.JCT.BOX-FUEL PRIME PUMP	TC	1	561070	561073
C 221	BATTERY CMPT. FIRE DETECTOR	DEUTSCH	2	562486	562485
C 222	ENGINE CMPT. FIRE DETCTOR	DEUTSCH	2	562486	562485
C 223	ENGINE CMPT. FIRE DETCTOR	DEUTSCH	2	562486	562485
C 224	ENGINE CMPT. -VORAD J1939	DEUTSCH	3	562877	562884
C 225	ENGINE CMPT. -VORAD J1939	DEUTSCH	3	562877	562884
C 226	FR LH UPPER WHEEL CPT-VORAD J1939	DEUTSCH	3	562677	562884
C 227					
C 228	ENG.CPT.- A/C COMPRESSOR	PED WP	2	561566	561690
C 229					
C 230	ENG.CPT.-FUEL PRIME PUMP FEED	DEUTSCH	2	562486	562485
C 231	ENG.CPT.-FUEL PRIME PUMP SW.	PED WP	2	561566	561690
C 232	ENG.CPT.-FUEL PRIME PUMP	PED WP	2	561566	561690
C 233	FR. SERVICE COMPT.	VDO	8		562043
C 234	FR. SERVICE COMPT.	VDO	8		562044
C 235	FR. SERVICE COMPT.	VDO	8		562041
C 236	LUGGAGE COMPARTEMENT	AMP MNL	4	560851	560852
C 237	UNDER DASH LH-JACOB CLUTCH SW	ITT SS	3	561111	561080
C 238	UNDER DASH LH-PASS. REC. DAMPER SW	EATON	8	------	562763
C 239	FR SERVICE CPT-HI BUOY VALVE	PED WP	2	561566	561690
C 240	FR SERVICE CPT-KNEEL PROX SW	PED WP	3	561781	562428
C 241	HEADLAMPS HI BEAM	HELLA	2		562623
C 242	HALOGEN HEAHLAMPS LO BEAM	HELLA	2		562623
C 242	XENON HEADLAMPS LO BEAM	DELPHI	2		563366
C 243	FRONT CAP- HEADLIGHTS MAIN CONN	DEUTCH	6	565131	562789
C 244	FR SERVICE CPT-LH FOG LAMP	DEUTCH	2	562902	562901
C 245	FR SERVICE CPT-RH FOG LAMP	DEUTCH	2	562902	562901
C 246	UNDER DASH - L.H. MIRROR	CONNXALL	5	563196	563090
C 247	HEADLAMPS MARK & DIR LTS	AMP SUPER S	3		562601
C 248	FR JCT BOX-WIPER PULSE GEN	AMP FF	6	------	561108
C 249					
C 250	LH CONSOL PANEL- LOW BOY	PED	2	561566	561690
C 251	LH DASH PANEL-FAST IDLE SW	EATON	8	------	562763
C 252					
C 253	LH DASH PANEL-ETHER SW	EATON	8	------	562763

CONNECTORS CODE

NO	LOCATION	TYPE	CAVITY	#PIN HOUSING	#SOCKET HOUSING
C 254	INST. PANEL RH-ENTR.DOOR SW.	TORRIX	5	------	562110
C 255	LH DASH PANEL-JACOB & RETARDER SW	EATON	8	------	562763
C 256					
C 257					
C 258	LH SW PANEL-MULTI FUNC. SW	AMP FF	8	561188	------
C 259	LH SW PANEL-MULTI FUNC. SW	AMP FF	6	------	561108
C 260	FR SERVICE CPT-LUG DOOR LCK	PED WP	6	561606	561607
C 261	UNDER DASH RH-DOOR MODULE	AMP MNL	9	561670	561669
C 262	UNDER DASH RH-DOOR MODULE	AMP MNL	4	561551	561668
C 263	UNDER DASH RH-DOOR MODULE	AMP MNL	3	561667	561550
C 264	UNDER DASH RH-DOOR MODULE	AMP MNL	3	561667	561550
C 265	UNDER DASH RH-DOOR MODULE	AMP HDP-20	15	562011	562012
C 266					
C 267	UNDER DASH RH	AMP CPC	24	561642	561643
C 268					
C 269	UNDER DASH - R.H. MIRROR	CONNXALL	5	563196	563090
C 270	LH MIRROR POST	MOLEX	6	562070	562069
C 271	RH MIRROR POST	MOLEX	6	562070	562069
C 272	LH MIRROR	SPARTAN	6	------	990158
C 273	RH MIRROR	SPARTAN	6	------	990158
C 274	RR. JCT. BOX – SIGNAL ALT. MODULE	AMP MNL	12	561735	561734
C 275	UNDER DASH RH-DOOR MODULE	AMP MNL	9	561670	561669
C 276	UNDER DASH RH-LOCK SOL.VALVE	AMP MNL	2	561248	561247
C 277					
C 278					
C 279 *	FR SERVICE CPT.- STEERING ZF	DEUTCH	2		562486
C 279	UNDER DASH CYLINDER READ SW.	AMP MNL	2	561248	561247
C 280	LH CONSOLE-UNLOAD TAG SW.	NGR	10	------	562763
C 281					
C 282					
C 283					
C 284	LH DR'S ROOF - MONITOR FEED	PED WP	3	561781	561782
C 285	LH DR'S ROOF – SOUND SYSTEM	AMP CPC	24	561642	561643
C 286	RH SW PANEL-A/C & HEAT	EATON	8	------	562763
C 287	ENGINE COMPT-LTS SW	PED WP	2	561566	561690
C 288	RH SW PANEL-FRESH AIR	EATON	8	------	562763
C 289					
C 290					
C 291					
C 292	LH PARCEL RACK VIDEO PANEL– MONITOR	MOLEX	4	563040	563071
C 293	LH PARCEL RACK VIDEO PAN. – RCA RELAY	AMP MNL	2	561248	561247
C 294	LH PARCEL RACK VIDEO PAN.– RCA RELAY	AMP MNL	2	561248	561247
C 295	LH PARCEL RACK VID. PANEL– AMPLI VIDEO	MOLEX	4	563040	563071
C 296	LH PARCEL RACK VIDEO PAN. – MICRO SIGNAL	MOLEX	4	562507	562503
C 297	INSTRUMENT PANEL RH -LTS	AMP MNL	2	560900	560898
C 298					
C 299	RH DASH PANEL SW-GALLEY	EATON	8	------	562763
C 300	FR SERVICE CPT.- LOW BEAM RESISTORS	PED WP	2	561566	561690
C 301	FR SERVICE CPT.- DR'S FAN SPEED	PED WP	1	561605	561577
C 302					
C 303					
C 304					
C 305					
C 306					
C 307					
C 308	LH CONSOLE SW-RHEOSTAT	TC	2	561030	560997
C 309					
C 310	LH DASH PANEL -LUG. DOOR LCK SW	EATON	8	------	562763
C 311	RH DASH PANEL -HOS & PAS CHIME SW	EATON	8	------	562763
C 312	RH DASH PANEL -READING LTS SW	EATON	8	------	562763
C 313	RH DASH PANEL -GEN & FLUOR LTS SW	EATON	8	------	562763
C 314	LH DASH PANEL-FR DEST. SIGN SW	EATON	8	------	562763
C 315	LH DASH PANEL-LH STORE SW	EATON	8	------	562763
C 316	LH CONSOLE SPARE SWITCH	EATON	8	------	562763
C 317	LH DASH PANEL-RH STORE SW	EATON	8	------	562763
C 318	LH CONSOLE SW-DRV WINDOW LIFT	EATON	8	------	562763
C 319					

NO	LOCATION	TYPE	CAVITY	#PIN HOUSING	#SOCKET HOUSING
C 320	RH DASH PANEL-DRIVER'S LTS SW	EATON	8	------	562763
C 321	READING LTS TEST				
C 322	LH CONSOLE DRV WIND LIFT MOT	PED PO	2	------	561848
C 323	LH CONSOLE CRUISE CTR SW PAN. AMP	CPC	9	561636	561637
C 324					
C 325	LH DASH PANEL-KNEELING SW	EATON	8	------	562763
C 326	ENGINE CMPT.	PED	4	------	561610
C 327	ENGINE CONTROL	DEUTSCH	6	562583	562581
C 328	GALLEY-LAMP	AMP MNL	2	561248	561247
C 329	ENGINE TACHO SIGNAL	PED WP	3	561781	561789
C 330					
C 331	GALLEY MICROWAVE SW	EATON	8	------	562763
C 332					
C 333	GALLEY RH CONTAINER SW	EATON	8	------	562763
C 334	GALLEY LH CONTAINER SW	EATON	8	------	562763
C 335					
C 336					
C 337	INSTR PANEL LH-UP WIPER SW	EATON	8	------	562763
C 338	INSTR PANEL LH-UP DEFROST SW	EATON	8	------	562763
C 339	INSTR PANEL LH-UP WASHER SW	EATON	8	------	562763
C 340	FR JCT. BOX FIRE PIEZO ALARM	AMP MNL	2	560900	560898
C 341	INSTR PANEL LH-HEAT MIRROR SW	EATON	8	------	562763
C 342	ENGINE RR START SW	DEUTSCH	2	562586	562585
C 343	INSTR PANEL LH-HEADLAMP SW	EATON	8	------	562763
C 344	INSTR PANEL LH-HAZARD LT SW	EATON	8	------	562763
C 345	INSTR PANEL LH-FOG LT SW	EATON	8	------	562763
C 346					
C 347	INSTR PANEL LH-DASH LT SW	AMP MNL	2	560900	560898
C 348	INSTR PANEL CENT-RACOR MODULE	MOLEX	6	562070	562067
C 349					
C 350	RH CONSOLE-THERMOMETER	AMP MNL	3	561667	561550
C 351	LH HAT RACK-FLUOR 110V	MOLEX	4	561477	561476
C 352	RH CONSOLE-DRV TEMP SENSOR	BURNDY	4	------	561104
C 353	INSTR PANEL RH-DRV FAN RHEOST	AMP MNL	6	561552	561515
C 354	INSTR PANEL RH-DRV TEMP CTR	AMP MNL	6	561552	561515
C 355	INSTR PANEL RH-FR TEMP CTR	AMP MNL	3	561667	561550
C 356					
C 357	INSTR PANEL RH-WATER TEMP GA	AMP MNL	3	561667	561550
C 358	INSTR PANEL RH-FUEL LEVEL GA	AMP MNL	3	561667	561550
C 359					
C 360					
C 361	FR ROOF-WIPER MOTOR	AMP FF	6	------	561186
C 362	FR ROOF-LAVATORY OCCUPIED LT	AMP MNL	2	561248	561247
C 363	FR ROOF-WATCH YOUR STEP LT	AMP MNL	2	561248	561247
C 364	FR ROOF-DESTINATION SIGN	AMP MNL	3	561667	561550
C 365	FR ROOF-UP WINDSHIELD DEFROST	AMP MNL	3	561667	561550
C 366	RH DASH PANEL-GRN & RED LEDS	AMP MNL	3	560908	562006
C 367	ENGINE COMPT-DIF OIL T SENSOR	PED WP	2	561566	561690
C 368	FR ROOF-DEST. SIGN BALLAST	AMP MNL	3	561667	561550
C 369	FR ROOF-DEST. SIGN OPER. SW	TORRIX	5	------	562110
C 370	FR ROOF-DEST. SIGN FLUOR.	AMP MNL	2	560900	560898
C 371	FR ROOF-DEST. SIGN FLUOR.	AMP MNL	2	560900	560898
C 372	FR ROOF-DEST. SIGN SPEED SW	MOLEX	4	561477	561476
C 373	FR ROOF-NO SMOKING LT	AMP MNL	2	561248	561247
C 374	LH SWITCH PANEL	AMP MNL	6	561552	561515
C 375					
C 376					
C 377	LH DASH PANEL-STOP ENG.OVERIDE SW	EATON	8	------	562763
C 378					
C 379					
C 380	LH CONSOLE-DDR CONNECTOR	DEUTSCH	6	562360	------
C 381					
C 382					
C 383					
C 384					
C 385	EVAPOTATOR COMP WATER PUMP	PED WP	2	561566	561690
C 386	LH DASH PANEL-WCL POWER SYSTEM SW	EATON	8	------	562763

CONNECTORS CODE

NO	LOCATION	TYPE	CAVITY	#PIN HOUSING	#SOCKET HOUSING
C 387	RR JCT BOX (WCL)	AMP MNL	9	561661	561662
C 388	RR JCT BOX (WCL)	AMP MNL	12	561735	561734
C 389	WCL REAR DOOR	MOLEX	4	561477	561476
C 390	LAVATORY WALL-WCL REMOTE CTR	EATON	8	------	562763
C 391	LAVATORY WALL-WCL LAMP	EATON	8	------	562763
C 392	LAVATORY WALL-WCL SW. LT.	EATON	2	------	561835
C 393	LAVATORY WALL-WCL REMOTE SYS.	AMP CPC	4	561686	561687
C 394	UNDER INSTR. PANEL- B/U MONITOR	AMP MNL	4	560851	560852
C 395	DRIVER'S COMPT. - B/U MONITOR	AMP	5	------	------
C 396	FR SECT. LH HAT RACK-SPEAKER	MOLEX	4	562507	562503
C 397	ENGINE COMPT. CRADLE ACC.	DEUTSCH	40	562281	562284
C 398	ENGINE COMPT. – PRE-EXITATION ALT.	PED WP	2	561566	561690
C 399					
C 400	ENGINE COMPT. BLOCK HEATER	PED MP	3	561781	561782
C 401	EVAPORATOR COMP.	PED WP	1	561605	561577
C 401	EVAPORATOR COMP.	PED WP	1	561605	561577
C 402					
C 403	GALLEY FRIGO NORCOLD	AMP MNL	2	561248	561247
C 404	GALLEY LAMP	AMP MNL	2	561248	561247
C 405	LAST LUGGAGE COMP.- INVERTER SIGNAL	AMP MNL	2	561248	561247
C 406	FR JCT BOX COMPT.-ABS	AMP MNL	2	560900	560898
C 407					
C 408					
C 409	ENGINE CPT -LOW COOL. LEVEL	PED MP	2	------	562350
C 410	FR JCT BOX-DIODE CONNECTOR	AMP MNL	15	561987	561986
C 411	FR JCT BOX-DIODE CONNECTOR	AMP MNL	15	561987	561986
C 412	LH DASH PANEL-MASTER SWITCH SW	EATON	8	------	562763
C 413	ENG CPT-A/C HI UNLOAD PRS SW	PED WP	2	561566	561690
C 414					
C 415	RR JCT BOX – ENGINE SIGNAL	DEUTSCH	24	562280	562283
C 416					
C 417	FRONT JCT BOX-DIODES	AMP MNL	15	561987	561986
C 418	LH DASH PANEL-HTR WINDSH.SW	EATON	8	------	562763
C 419	FR JCT BOX-RETARDER OR JACOB	AMP MNL	3	561667	561550
C 420					
C 421					
C 422					
C 423					
C 424	UNDER INSTRUMENT PANEL CENTER	AMP MNL	3	561667	561550
C 425	FR JCT BOX-DIODES	AMP MNL	15	561987	561986
C 426	ENGINE COMPT. CLUTCH CTR FAN	PED WP	3	561781	561782
C 427	PRO-HEAT	PED-WP	2	561566	561680
C 428	PRO-HEAT	PED WP	6	561606	561607
C 429	FR JCT BOX COMPT.	AMP MNL	6	561552	561515
C 430	LH CONSOLE-TIMER	AMP FF	8	561188	562363
C 431	LH CONSOLE-PRE HEAT.	TAB AMP	1	561540	561539
C 432	ENGINE CPT.-PROX. SW. DOOR AJAR	PED-WP	2	561566	561680
C 433	FR SERVICE CPT. KNEEL. PRESS. SW	PED WP	2	561566	561690
C 434	FRONT JCT. BOX-DIODES	AMP MNL	15	561987	561986
C 435	FR SERVICE CPT.(RH) KNEEL. PIEZO	AMP MNL	2	560900	560898
C 436	RH HAT RACK-WCL CENTER ROOF ACC	AMP CPC	16	561639	561640
C 437	RH HAT RACK-WCL FR & RR SECT.	AMP CPC	24	561642	561643
C 438	EVAP CMPT- A/C CONTROL	AMP MNL	2	561248	561247
C 439	EVAP CMPT- A/C CONTROL	AMP MNL	2	561248	561247
C 440	EVAP CMPT- A/C CONTROL	DEUTSCH	4	562479	562477
C 441	FR JCT BOX- DIODES	AMP MNL	15	561987	561986
C 442					
C 443					
C 444					
C 445					
C 446					
C 447					
C 448					
C 449					
C 450	SOUND SYS. JCT. PANEL	MOLEX	4	562507	562503
C 451	WIRELESS MICRO-FIRST CPT BAG	MOLEX	2	562550	562549
C 452	UNDER DASH INSTR. PANEL	MOLEX	2	562550	562549

NO	LOCATION	TYPE	CAVITY	#PIN HOUSING	#SOCKET HOUSING
C 453	SOUND SYS. JCT.PANEL-VCP	PED WP	2	561566	561680
C 454	SOUND SYS.JCT.PAN.-FILT. VCP	PED WP	2	561566	561680
C 455	WIRELESS MICRO-LH HAT-RACK	MOLEX	6	------	562464
C 456	WORLD TRANSM.-RETARDER ACCUM.	PED MP	2	------	562427
C 457	WORLD TRANSM.-MAIN CONNECTOR	DEUTSCH	31	562572	562536
C 458	WORLD TRANSM.-TURBINE SP.SENS	PED MP	2	------	562426
C 459	WORLD TRANSM.-ENGINE SP.SENS.	PED MP	2	------	562426
C 460	WORLD TRANSM.-SPEED SENSOR	ITT	2	------	562541
C 461	WORLD TRANSM.-RETARDER TEMP.	PED MP	2	561566	561680
C 462	WORLD TRANSM.-RETARD SOL."K"	PED MP	2	------	562426
C 463	WORLD TRANSM.-SENSOR CONN.	DEUTSCH	16	562570	562571
C 464	RR JCT BOX-DDR CONNECTOR	DEUTSCH	6	------	562360
C 465	LH CONSOLE-SHIFTER SELECTOR	PED	20	------	562825
C 466	FR SERVICE CPT.-RESIS. MOD.	PED WP	3	------	562428
C 467	FR SERVICE CPT.-RESIS. MOD.	PED WP	3	------	562428
C 468			8		
C 469					
C 470	FR LH UPPER WHELL CPT-SILENT 1000	AMP MNL	2	561248	561247
C 471	FR LH UPPER WHELL CPT-SILENT 1000	AMP MNL	2	561248	561247
C 472	FR LH UPPER WHELL CPT-SILENT 1000	PED WP	2	561566	561690
C 473	FR LH UPPER WHELL CPT-SILENT 1000	AMP MNL	3	561667	561550
C 474	DRIVER CPT.-TEMP. SENSOR	AMP MNL	2	561247	561248
C 475	RR JCT BOX-SPEED SIGN CONNECTOR	DEUTSCH	2	562486	562485
C 476					
C 477					
C 478	ELECTRONIC DESTINATION SIGN	AMP CPC	9	561636	561637
C 479	HVAC MODULE	MOLEX	3		562783
C 480	UNDER DASH LH-DR. FAN SPEED CTR. MOD	PED	4	561889	561890
C 481	UNDER DASH LH-DR. FAN SPEED CTR. MOD	PED	3	561781	561782
C 482					
C 483	FR SERVICE CPT. (NOT USED)	PED PC	2	------	562237
C 484	UNDER DASH LH.-FOOT DAMPER MOTOR	PED PC	2	------	562076
C 485	UNDER DASH LH.-DASH & DEFR. DAM.MOT.	AMP MNL	3	561667	561550
C 486					
C 487	S.S.PANEL – AUDIO IN AMPLI	MOLEX	4	------	563071
C 488	S.S.PANEL – AMPLI SIGNAL	MOLEX	8	------	562465
C 489	S.S.PANEL – SPEAKER OUTLET	MOLEX	6	------	562464
C 490					
C 491					
C 492					
C 493					
C 494					
C 495					
C 496					
C 497					
C 498					
C 499					
C 500	FR LH UPPER WHELL CPT -PRODRIVER	MOLEX	6	562070	562069
C 501	FR LH UPPER WHELL CPT -PRODRIVER	PED MP	7	562433	------
C 502	LH DASH PANEL-PRE HEATER SW.	EATON	8	------	562763
C 503	LH CONSOLE-PRE HEATER SW.	EATON	2	------	561837
C 504	LH CONSOLE WEBASTO TIMER	AMP	8	------	562852
C 505	LH CONSOLE ESPAR TIMER	AMP	9	------	562681
C 506	FR JCT BOX CPT. DIGITAL CLOCK	AMP	4	561685	561687
C 507	FR SECT. LH HAT-RACK DIG. CLOCK	MOLEX	4	561477	561476
C 508	RR JCT BOX-FAN CLUTCH RETARDER	AMP MNL	6	561552	561515
C 509	FR LH UPPER WHELL CPT -DATA LOGGER	PED MP	16	------	562530
C 510	FR LH UPPER WHELL CPT -DATA LOGGER	DEUTSCH	9	562531	------
C 511	FR LH UPPER WHELL CPT -DATA LOGGER	PED MP	4	562532	------
C 512	FR LH UPPER WHELL CPT -DATA LOGGER	PED MP	10	562533	------
C 513	FR LH UPPER WHELL CPT -DATA LOGGER	AMP MNL	3	561667	561550
C 514	FR LH UPPER WHELL CPT -DATA LOGGER	PED MP	6	562433	562417
C 515	FR JCT BOX CPT.-INTERCOM	MOLEX	4	561477	561476
C 516	FR JCT BOX CPT.-INTERCOM	MOLEX	6	562070	562069
C 517	LAVATORY WALL-INTERCOM	MOLEX	6	562070	562069
C 519	UNDER DASH RH-SEDAN DOOR	HUMPHREY	2	------	562580
C 520	UNDER DASH RH-SEDAN DOOR	HUMPHREY	2	------	641385

CONNECTORS CODE

NO	LOCATION	TYPE	CAVITY	#PIN HOUSING	#SOCKET HOUSING
C 521	UNDER DASH RH-SEDAN DOOR	HUMPHREY	2	------	641385
C 522					
C 523	FR JCT BOX-FUSE BLOCK	PED	8	562647	562646
C 524	FR JCT BOX-FUSE BLOCK	PED	8	562647	562646
C 525	FR JCT BOX-FUSE BLOCK	PED	8	562647	562646
C 526	FR JCT BOX-FUSE BLOCK	PED	8	562647	562646
C 527	FR JCT BOX-FUSE BLOCK	PED	8	562647	562646
C 528	FR JCT BOX-FUSE BLOCK	PED	8	562647	562646
C 529	FR JCT BOX-12V OUTLET	AMP MNL	2	561247	561248
C 530	RR JCT BOX-FUSE BLOCK	PED	8	562647	562646
C 531	RR JCT BOX-FUSE BLOCK	PED	8	562610	---
C 532	RR JCT BOX-FUSE BLOCK	PED	8	562610	---
C 533	RR JCT BOX-FUSE BLOCK	PED	8	562647	562646
C 534	RR JCT BOX-FUSE BLOCK	PED	8	562647	562646
C 535	RR JCT BOX-FIRE MODULE DETECT.	AMP MNL	3	561667	561550
C 536	UNDER DASH RH-DRIVER'S HTR TEMP. CTR	AMP MNL	6	561552	561515
C 537	BATT. CPT.-A/C PRESS. SIGN. RLY	AMP MNL	2	561248	561247
C 538	FR SERVICE CPT.-OUTSIDE TEMP. SENSOR	AMP MNL	2	561248	561247
C 539	HVAC DASH MODULE OUTPUT CON	MOLEX	24		562780
C 540	HVAC DASH MODULE INPUT CON	MOLEX	22		562781
C 541	SOUND SYS. JCT PANEL-AUDIO SEAT SYS.	PED WP	2	561566	561690
C 542	LH HAT RACK-AUDIO SEAT SYSTEM	AMP MNL	3	561667	561550
C 543	EVAPORATOR COMP.	PED WP	1	561605	561577
C 544	SOUND SYS JCT PANEL-AUDIO SEAT SYS.	PED WP	3	561781	562428
C 545	LH HAT RACK-AUDIO SEAT SYSTEM	AMP MNL	3	561667	561550
C 546	WIRELESS MIC. CHARGING SYSTEM	MOLEX	2	--------	563025
C 547	RH DASH PANEL-ACCESSORIES	AMP CPC	37	561645	561646
C 548	LH DASH PANEL-T.T. LT. TEST SW.	EATON	8	------	562763
C 549	LH DASH PANEL-FAN CLUTCH OVERR. SW	EATON	8	------	562763
C 550	LAST LUGG. CPT. -WCL RICON	AMP CPC	16	561694	561695
C 551	LAST LUGG. CPT. -WCL RICON	AMP CPC	16	561694	561695
C 552	LAST LUGG. CPT. -WCL RICON	AMP CPC	9	561636	561637
C 553	UNDER DASH R.H. - CONTROL. HEAD	MOLEX	16	---------	562559
C 554	UNDER DASH R.H. - CONTROL. HEAD	MOLEX	16	---------	562559
C 555	UNDER DASH R.H. - CONTROL. HEAD	MOLEX	16	---------	562559
C 556	UNDER DASH R.H. - RADIO ACC.	MOLEX	2	562550	562549
C 557	UNDER DASH R.H. - RADIO ACC.	MOLEX	9	562556	562555
C 558	UNDER DASH R.H. - RADIO ACC.	MOLEX	4	562507	562503
C 559	SOUND SYS. JCT. PANEL – FILTER AMPLI	PED WP	2	561566	561690
C 560	SOUND SYS. JCT. PANEL – POWER AMPLI	MOLEX	4	562507	562503
C 561	L.H. HAT RACK - WIRELESS MICRO	MOLEX	8		562465
C 562	L.H. HAT RACK - VCP	MOLEX	12	562556	563070
C 563	L.H MODESTY PANEL - DRIVERS SPK.	MOLEX	4	562507	562503
C 564	L.H MODESTY PANEL - MICRO	MOLEX	4	562507	562503
C 565	R.H MODESTY PANEL - MICRO	MOLEX	4	562507	562503
C 566	L.H. CONSOLE - BOOM MICRO	MOLEX	4	562507	562503
C 567	L.H. CONSOLE - DRIVERS MICRO	MOLEX	4	562507	562503
C 568	SOUND SYS. JCT. PANEL - PASS. SPK	CINCH	4	562553	562552
C 569	SOUND SYS. JCT. PANEL - POWER AMPLI.	MOLEX	9	562556	562555
C 570	UNDER DASH PANEL TTLT	MOLEX	6		562464
C 571	UNDER DASH PANEL TTLT	MOLEX	20		562778
C 572	UNDER DASH PANEL TTLT	MOLEX	18		562779
C 573	UNDER DASH PANEL TTLT	MOLEX	8		562465
C 574	HAT -RACK FLUOR. INDIRECT LIGHTING	MOLEX	6	----------	562759
C 575	HAT -RACK FLUOR. INSTATION LIGHT	MOLEX	4	562507	562503
C 576	HAT -RACK FLUOR. INDIRECT LIGHTING	AMP MNL	3	561667	561550
C 577	HAT -RACK FLUOR. INDIRECT LIGHTING	AMP MNL	3	561667	561550
C 578	HAT -RACK FLUOR. INSTATION LIGHT	MOLEX	4	562507	562503
C 579	L.H HAT RACK – VCP POWER	MOLEX	4		563071
C 580	RH DASH PANEL-HAT RACK FAN SW	EATON	8	--------	562763
C 581					
C 582	FRONT SERVICE CMPT. - WINDOWS AJAR	PED WP	2	561566	561690
C 583	L.H. DASH PANEL - MASTER KEY	DEUTSCH	2	562486	562485
C 584	FRONT SERVICE CMPT. - AIR HORH	HUMPHREY	3	--------	641385
C 585					
C 586					
C 587	LH PARCEL RACK DVD UNIT	MOLEX	4	563040	563071

NO	LOCATION	TYPE	CAVITY	#PIN HOUSING	#SOCKET HOUSING
C 588	FRONT SERVICE CPT. CENTER SOUND SYS.	CONNXALL	9	563163	563089
C 589	UNDER DASH - L.H. MIRROR	CONNXALL	9	563163	563089
C 590	UNDER DASH - R.H. MIRROR	AMP MNL	9	561670	561669
C 591	L.H.CONSOLE - MIRROR L.H.	EURAMTEC	8	--------	562799
C 592	L.H.CONSOLE - MIRROR R.H.	EURAMTEC	8	--------	562799
C 593	BATTERY CMPT. - CHARGER	PED WP	3	561781	561782
C 594	FRONT ROOF - DRIVERS LIGHT	LEEKRAFT		---------	562803
C 595	DASH CENTER MODULE - OPEN DOOR	MOLEX	4	561477	561476
C 596	DASH CENTER MODULE - CLOSE DOOR	MOLEX	4	561477	561476
C 597	L.H. DASH PANEL - DISPLAY SET SW.	MOLEX	5		562812
C 598	L.H. DASH PANEL - DISPLAY SET SW.	MOLEX	5		562812
C 599	UND.DASH-MAGN.SW.CTR POS. DR'S AIR	AMP MNL	2	561248	561247
C 600	ENGINE CPT.-A/C LOW PRESS SW. UNLOAD	PED	2	562348	562471
C 601	L.H. ROOF - WINDOW AJAR	MOLEX	4	561477	561476
C 602	L.H. ROOF - WINDOW AJAR	MOLEX	4	561477	561476
C 603	R.H. ROOF - WINDOW AJAR	MOLEX	4	561477	561476
C 604	LH PARCEL RACK DVD VIDEO STABILIZER	SWITCHCRAFT	1	563074	
C 605	HAT RACK - MOTOR FAN	PED	2	560997	561030
C 606	HAT RACK - MOTOR FAN	PED	2	560997	561030
C 607					
C 608	FRONT SERVICE CMPT. SPEED SIGNAL	PED WP	2	561566	561690
C 609	LAVATORY - NIGHT LIGHT				
C 610					
C 611	HAT RACK READING LTS RICON	MOLEX	6	562558	562557
C 612	HAT -RACK FLUOR. INSTATION LTS RICON	MOLEX	4	562507	562503
C 613	HAT -RACK INDIRECT LTS RICON	AMP MNL	3	561667	561550
C 614	HAT -RACK INDIRECT LTS RICON	AMP MNL	3	561667	561550
C 615	LH PARCEL RACK DVD SING ALONG ADAPT.	MOLEX	2	562550	562549
C 616					
C 701	ZF TRANSMISSION ECU	KOSTAL	20		
C 702	SHIFT SELECTOR – LH CONSOLE	AMP	14		563338
C 712	NEUTRAL SWITCH ON ZF TRANSM. (TOP)	AMP	4		563340
C 714	OUTPUT SENSOR ON ZF TRANSM. (BOTTOM)	AMP	4		563340
C 717	BATT. CPT - MAIN CONNECTOR	AMP CPC	22	561642	561643
C 720	ENGINE COMPT – BLKHD CONNECTOR	DEUTSCH	31	563359	563358
C 721	LH CONSOLE – ZF TESTMAN DIAGNOSTIC	AMP MNL	6	563356	
C 723	ENGINE COMPT – FOR TRANSM.	DEUTSCH	3		562884
C 736	ENGINE COMPT – ZMTEC MODULE	PACKARD	30	563053	
C 740	DRIVE AXLE – EASY START SOL VALVE	LEONI	2	--	641949
C 742	BATT. CPT – FUSE BLOCK	AMP	8	562446	
C 745	FR SERV.COMPT – THROTTLE POS. SENSOR	PED WP	3	561781	
C 760	FR SERV. COMPT – TO J1939	DEUTSCH	3		
C 761	FR SERV. COMPT – TO J1939	DEUTSCH	3		562884
C 762	ENGINE COMPT – TO J1939	DEUTSCH	3		562884
C 763	ENGINE COMPT – TO J1939	DEUTSCH	3		562884
C 764	ENGINE COMPT – TO J1939	DEUTSCH	3		562884
C 765	ENGINE COMPT – TO J1939	DEUTSCH	3		562884
C 766	ENGINE COMPT – TO J1939	DEUTSCH	3		562884
C X	CLUSTER	JAE	22		562766
C Y	CLUSTER	JAE	30		562767
L X	CLUSTER	JAE	22		562764
L					
R					

DIODES NUMBER CODE

No.	PAGE	AMP	#PREV.	LOCATION	FUNCTION
D 1	13.1	3A	560931	EVAP.COMP.	BYPASS VALVE
D 2					
D 3	1.1	3A	561740	RR JCT BOX	24V DISC. CUT OUT RLY
D 4	9.2	3A	561740	FR JCT BOX	WARNING HAZARD-RH
D 5	9.2	3A	561740	FR JCT BOX	WARNING HAZARD-LH
D 6	5	3A	561740	FR JCT BOX	WCL NEUT. SIGN INTERFACE TO PARK BRK TTLT
D 7					
D 8	9.1	3A	561740	FR JCT BOX	HI/LO BEAMS
D 9	12	3A	561740	FR L.H. HAT-RACK	HOSTESS & PASSENGER CHIME
D 10	9.1	3A	561740	FR JCT BOX	DAY-TIME RUN LIGHT –ENGINE NOT RUN
D 11	17	3A	561740	RR JCT BOX	LAVATORY OCCUPIED SIGN
D 12	17	3A	561740	RR JCT BOX	LAVATORY OCCUPIED SIGN
D 13	17	3A	561740	FR DEST. SIGN	FR DESTINATION SIGN
D 14	17	3A	561740	FR DEST. SIGN	FR DESTINATION SIGN
D 15	18	3A	561740	FR JCT BOX	KNEELING SYSTEM CTR-UP
D 16	18	3A	561740	FR JCT BOX	KNEELING SYSTEM CTR-DOWN
D 17	9.2	3A	561740	FR JCT BOX	WARNING HAZARD-LH
D 18	9.2	3A	561740	FR JCT BOX	WARNING HAZARD-RH
D 19	9	3A	561740	FR JCT BOX	DAYTIME RUN LTS-PARK BRK CALL SW.
D 20	9	3A	561740	FR JCT BOX	DAYTIME RUN LTS-HEAD LT SW
D 21	18	3A	561740	FR JCT BOX	KNEELING SYSTEM FEED BACK
D 22	4.2	3A	561740	FR JCT BOX	ALTERNATOR POWER IGNITION
D 23					
D 24					
D 25	11.1	3A	561740	FR JCT BOX	LUGGAGE DOOR AJAR T.T.LT.
D 26	11.1	3A	561740	FR JCT BOX	LUGGAGE DOOR AJAR T.T.LT.
D 27	11.1	3A	561740	FR JCT BOX	LUGGAGE DOOR AJAR T.T.LT.
D 28	11.1	3A	561740	FR JCT BOX	LUGGAGE DOOR AJAR T.T.LT.
D 29	11.1	3A	561740	FR JCT BOX	LUGGAGE DOOR AJAR T.T.LT.
D 30	11.1	3A	561740	FR JCT BOX	LUGGAGE DOOR AJAR T.T.LT.
D 31					
D 32					
D 33					
D 34					
D 35	25	3A	561740	RR JCT BOX	WCL DOOR AJAR ALARM T.T.LT.
D 36	11.4	3A	561740	RR JCT BOX	CHARGEUR 24V/110V
D 37	11.4	3A	561740	RR JCT BOX	CHARGEUR 24V/110V
D 38	11.4	3A	561740	RR JCT BOX	CHARGEUR 24V/110V
D 39					
D 40					
D 41					
D 42					
D 43	10	3A	561740	LOWER WIPER MOT.	WIPER MOTOR SUPRESSOR
D 44	10	3A	561740	LOWER WIPER MOT.	WIPER MOTOR SUPRESSOR
D 45	10	3A	561740	UPPER WIPER MOT.	WIPER MOTOR SUPRESSOR
D 46	9.3	3A	561740	RR JCT BOX	PARK BRAKE STOP LIGHT
D 47	9.3	3A	561740	RR JCT BOX	CYCLOP LTS
D 48					
D 49					
D 50					
D 51					
D 52					
D 53					
D 54					
D 55	25	3A	561740	RR JCT BOX	SHIFTER INHIBIT R109
D 56	9.3	3A	561740	RR JCT BOX	PARK BRAKE STOP LTS SIGNAL BLOCKED
D 57					

No.	PAGE	AMP	#PREV.	LOCATION	FUNCTION
D 58	17	3A	561740	FR JCT BOX	RR HIGH BUOY - KNEELING
D 59	13.2	3A	561740	RR JCT BOX	A/C & HEAT BYPASS SWITCH
D 60	13.1	3A	561740	RR JCT BOX	A/C PASS. LIQ. SOL. VALVE
D 61	9.2	3A	561740	FR JCT BOX	KNEELING SIDE FR RH DIRECTIONNAL LT
D 62	13.2	3A	561740	RR JCT BOX	WATER PUMP FEED
D 63	17	3A	561740	FR JCT BOX	LAVATORY SONALERT
D 64	17	3A	561740	FR JCT BOX	WCL DOOR ALARM
D 65	13.2	3A	561740	RR JCT BOX	WATER PUMP - PRE-HEAT FEED
D 66	13.2	3A	561740	RR JCT BOX	WATER VALVE - HEAT SW. FEED
D 67	9.2	3A	561740	UNDER DASH	AUDIBLE FLASHER RLY - RH
D 68	9.2	3A	561740	UNDER DASH	AUDIBLE FLASHER RLY - LH
D 69					
D 70	18	3A	561740	FR JCT BOX	FR HIGH BUOY - KNEELING
D 71	18	3A	561740	FR JCT BOX	FR HIGH BUOY - KNEELING
D 72	18	3A	561740	FR JCT BOX	FR HIGH BUOY - KNEELING
D 73	18	3A	561740	FR JCT BOX	FR HIGH BUOY - KNEELING
D 74					
D 75	4	3A	381351	RR JCT BOX	STARTER-SUPPRESSOR COIL RLY
D 76	9.3	3A	561740	RR JCT BOX	STOP LIGHT RLY
D 77	18	3A	561740	FR JCT BOX	PARKING BRAKE - KNEELING
D 78	26	3A	561740	LH CONSOLE	PRE-HEAT WATER HEATER SW.
D 79	26	3A	561740	LH CONSOLE	PRE-HEAT WATER HEATER SW.
D 80					
D 81	18	3A	561740	FR JCT BOX	PIEZO-KNEELING
D 82	8.1	3A	561740	RR JCT BOX	FAN CLUTCH
D 83	8	3A	561740	RR JCT BOX	FAN CLUTCH W/RETARDER
D 84	13.2	3A	561740	RR JCT BOX	WATER VALVE
D 85	16.1	3A	561740	FR JCT BOX	ENTRANCE DOOR SEDAN
D 86	16	3A	561740	UNDER DASH RH	ENTRANCE DOOR SEDAN
D 87	16	3A	561740	UNDER DASH RH	ENTRANCE DOOR SEDAN
D 88	16	3A	561740	UNDER DASH RH	ENTRANCE DOOR SEDAN
D 89	16	3A	561740	UNDER DASH RH	ENTRANCE DOOR SEDAN
D 90	16	3A	561740	UNDER DASH RH	ENTRANCE DOOR SEDAN
D 91	16	3A	561740	UNDER DASH RH	ENTRANCE DOOR SEDAN
D F1	8.1	3A	561740	RR. JCT. BOX	FAN CLUTCH - SUPPRESSOR
D F2	8.1	3A	561740	RR. JCT. BOX	FAN CLUTCH - SUPPRESSOR

DIODES NUMBER CODE

No.	PAGE	AMP	#PREV.	LOCATION	FUNCTION
D 1	13.1	3A	560931	EVAP.COMP.	BYPASS VALVE
D 2					
D 3	1.1	3A	561740	RR JCT BOX	24V DISC. CUT OUT RLY
D 4	9.2	3A	561740	FR JCT BOX	WARNING HAZARD-RH
D 5	9.2	3A	561740	FR JCT BOX	WARNING HAZARD-LH
D 6	5	3A	561740	FR JCT BOX	WCL NEUT. SIGN INTERFACE TO PARK BRK TTLT
D 7					
D 8	9.1	3A	561740	FR JCT BOX	HI/LO BEAMS
D 9	12	3A	561740	FR L.H. HAT-RACK	HOSTESS & PASSENGER CHIME
D 10	9.1	3A	561740	FR JCT BOX	DAY-TIME RUN LIGHT –ENGINE NOT RUN
D 11	17	3A	561740	RR JCT BOX	LAVATORY OCCUPIED SIGN
D 12	17	3A	561740	RR JCT BOX	LAVATORY OCCUPIED SIGN
D 13	17	3A	561740	FR DEST. SIGN	FR DESTINATION SIGN
D 14	17	3A	561740	FR DEST. SIGN	FR DESTINATION SIGN
D 15	18	3A	561740	FR JCT BOX	KNEELING SYSTEM CTR-UP
D 16	18	3A	561740	FR JCT BOX	KNEELING SYSTEM CTR-DOWN
D 17	9.2	3A	561740	FR JCT BOX	WARNING HAZARD-LH
D 18	9.2	3A	561740	FR JCT BOX	WARNING HAZARD-RH
D 19	9	3A	561740	FR JCT BOX	DAYTIME RUN LTS-PARK BRK CALL SW.
D 20	9	3A	561740	FR JCT BOX	DAYTIME RUN LTS-HEAD LT SW
D 21	18	3A	561740	FR JCT BOX	KNEELING SYSTEM FEED BACK
D 22	4.2	3A	561740	FR JCT BOX	ALTERNATOR POWER IGNITION
D 23					
D 24					
D 25	11.1	3A	561740	FR JCT BOX	LUGGAGE DOOR AJAR T.T.LT.
D 26	11.1	3A	561740	FR JCT BOX	LUGGAGE DOOR AJAR T.T.LT.
D 27	11.1	3A	561740	FR JCT BOX	LUGGAGE DOOR AJAR T.T.LT.
D 28	11.1	3A	561740	FR JCT BOX	LUGGAGE DOOR AJAR T.T.LT.
D 29	11.1	3A	561740	FR JCT BOX	LUGGAGE DOOR AJAR T.T.LT.
D 30	11.1	3A	561740	FR JCT BOX	LUGGAGE DOOR AJAR T.T.LT.
D 31					
D 32					
D 33					
D 34					
D 35	25	3A	561740	RR JCT BOX	WCL DOOR AJAR ALARM T.T.LT.
D 36	11.4	3A	561740	RR JCT BOX	CHARGEUR 24V/110V
D 37	11.4	3A	561740	RR JCT BOX	CHARGEUR 24V/110V
D 38	11.4	3A	561740	RR JCT BOX	CHARGEUR 24V/110V
D 39					
D 40					
D 41					
D 42					
D 43	10	3A	561740	LOWER WIPER MOT.	WIPER MOTOR SUPRESSOR
D 44	10	3A	561740	LOWER WIPER MOT.	WIPER MOTOR SUPRESSOR
D 45	10	3A	561740	UPPER WIPER MOT.	WIPER MOTOR SUPRESSOR
D 46	9.3	3A	561740	RR JCT BOX	PARK BRAKE STOP LIGHT
D 47	9.3	3A	561740	RR JCT BOX	CYCLOP LTS
D 48					
D 49					
D 50					
D 51					
D 52					
D 53					
D 54					
D 55	25	3A	561740	RR JCT BOX	SHIFTER INHIBIT R109
D 56	9.3	3A	561740	RR JCT BOX	PARK BRAKE STOP LTS SIGNAL BLOCKED
D 57					

No.	PAGE	AMP	#PREV.	LOCATION	FUNCTION
D 58	17	3A	561740	FR JCT BOX	RR HIGH BUOY - KNEELING
D 59	13.2	3A	561740	RR JCT BOX	A/C & HEAT BYPASS SWITCH
D 60	13.1	3A	561740	RR JCT BOX	A/C PASS. LIQ. SOL. VALVE
D 61	9.2	3A	561740	FR JCT BOX	KNEELING SIDE FR RH DIRECTIONNAL LT
D 62	13.2	3A	561740	RR JCT BOX	WATER PUMP FEED
D 63	17	3A	561740	FR JCT BOX	LAVATORY SONALERT
D 64	17	3A	561740	FR JCT BOX	WCL DOOR ALARM
D 65	13.2	3A	561740	RR JCT BOX	WATER PUMP - PRE-HEAT FEED
D 66	13.2	3A	561740	RR JCT BOX	WATER VALVE - HEAT SW. FEED
D 67	9.2	3A	561740	UNDER DASH	AUDIBLE FLASHER RLY - RH
D 68	9.2	3A	561740	UNDER DASH	AUDIBLE FLASHER RLY - LH
D 69					
D 70	18	3A	561740	FR JCT BOX	FR HIGH BUOY - KNEELING
D 71	18	3A	561740	FR JCT BOX	FR HIGH BUOY - KNEELING
D 72	18	3A	561740	FR JCT BOX	FR HIGH BUOY - KNEELING
D 73	18	3A	561740	FR JCT BOX	FR HIGH BUOY - KNEELING
D 74					
D 75	4	3A	381351	RR JCT BOX	STARTER-SUPPRESSOR COIL RLY
D 76	9.3	3A	561740	RR JCT BOX	STOP LIGHT RLY
D 77	18	3A	561740	FR JCT BOX	PARKING BRAKE - KNEELING
D 78	26	3A	561740	LH CONSOLE	PRE-HEAT WATER HEATER SW.
D 79	26	3A	561740	LH CONSOLE	PRE-HEAT WATER HEATER SW.
D 80					
D 81	18	3A	561740	FR JCT BOX	PIEZO-KNEELING
D 82	8.1	3A	561740	RR JCT BOX	FAN CLUTCH
D 83	8	3A	561740	RR JCT BOX	FAN CLUTCH W/RETARDER
D 84	13.2	3A	561740	RR JCT BOX	WATER VALVE
D 85	16.1	3A	561740	FR JCT BOX	ENTRANCE DOOR SEDAN
D 86	16	3A	561740	UNDER DASH RH	ENTRANCE DOOR SEDAN
D 87	16	3A	561740	UNDER DASH RH	ENTRANCE DOOR SEDAN
D 88	16	3A	561740	UNDER DASH RH	ENTRANCE DOOR SEDAN
D 89	16	3A	561740	UNDER DASH RH	ENTRANCE DOOR SEDAN
D 90	16	3A	561740	UNDER DASH RH	ENTRANCE DOOR SEDAN
D 91	16	3A	561740	UNDER DASH RH	ENTRANCE DOOR SEDAN
D 92	6.3	3A	561740	RR JCT. BOX	ZF TRANSMISSION
D 93	6.3	3A	561740	RR JCT. BOX	ZF TRANSMISSION
D F1	8.1	3A	561740	RR. JCT. BOX	FAN CLUTCH - SUPPRESSOR
D F2	8.1	3A	561740	RR. JCT. BOX	FAN CLUTCH - SUPPRESSOR

DIODES NUMBER CODE

No.	PAGE	AMP	#PREV.	LOCATION	FUNCTION
D 1	13.1	3A	560931	EVAP.COMP.	BYPASS VALVE
D 2					
D 3	1.1	3A	561740	RR JCT BOX	24V DISC. CUT OUT RLY
D 4	9.2	3A	561740	FR JCT BOX	WARNING HAZARD-RH
D 5	9.2	3A	561740	FR JCT BOX	WARNING HAZARD-LH
D 6	5	3A	561740	FR JCT BOX	WCL NEUT. SIGN INTERFACE TO PARK BRK TTLT
D 7					
D 8	9.1	3A	561740	FR JCT BOX	HI/LO BEAMS
D 9	12	3A	561740	FR L.H. HAT-RACK	HOSTESS & PASSENGER CHIME
D 10	9.1	3A	561740	FR JCT BOX	DAY-TIME RUN LIGHT –ENGINE NOT RUN
D 11	17	3A	561740	RR JCT BOX	LAVATORY OCCUPIED SIGN
D 12	17	3A	561740	RR JCT BOX	LAVATORY OCCUPIED SIGN
D 13	17	3A	561740	FR DEST. SIGN	FR DESTINATION SIGN
D 14	17	3A	561740	FR DEST. SIGN	FR DESTINATION SIGN
D 15	18	3A	561740	FR JCT BOX	KNEELING SYSTEM CTR-UP
D 16	18	3A	561740	FR JCT BOX	KNEELING SYSTEM CTR-DOWN
D 17	9.2	3A	561740	FR JCT BOX	WARNING HAZARD-LH
D 18	9.2	3A	561740	FR JCT BOX	WARNING HAZARD-RH
D 19	9	3A	561740	FR JCT BOX	DAYTIME RUN LTS-PARK BRK CALL SW.
D 20	9	3A	561740	FR JCT BOX	DAYTIME RUN LTS-HEAD LT SW
D 21	18	3A	561740	FR JCT BOX	KNEELING SYSTEM FEED BACK
D 22	4.2	3A	561740	FR JCT BOX	ALTERNATOR POWER IGNITION
D 23					
D 24					
D 25	11.1	3A	561740	FR JCT BOX	LUGGAGE DOOR AJAR T.T.LT.
D 26	11.1	3A	561740	FR JCT BOX	LUGGAGE DOOR AJAR T.T.LT.
D 27	11.1	3A	561740	FR JCT BOX	LUGGAGE DOOR AJAR T.T.LT.
D 28	11.1	3A	561740	FR JCT BOX	LUGGAGE DOOR AJAR T.T.LT.
D 29	11.1	3A	561740	FR JCT BOX	LUGGAGE DOOR AJAR T.T.LT.
D 30	11.1	3A	561740	FR JCT BOX	LUGGAGE DOOR AJAR T.T.LT.
D 31					
D 32					
D 33	13.2	3A	561740	UNDER DASH	PASS. REC. DAMPER SW.
D 34					
D 35	25	3A	561740	RR JCT BOX	WCL DOOR AJAR ALARM T.T.LT.
D 36	11.4	3A	561740	RR JCT BOX	CHARGEUR 24V/110V
D 37	11.4	3A	561740	RR JCT BOX	CHARGEUR 24V/110V
D 38	11.4	3A	561740	RR JCT BOX	CHARGEUR 24V/110V
D 39					
D 40					
D 41					
D 42					
D 43	10	3A	561740	LOWER WIPER MOT.	WIPER MOTOR SUPRESSOR
D 44	10	3A	561740	LOWER WIPER MOT.	WIPER MOTOR SUPRESSOR
D 45	10	3A	561740	UPPER WIPER MOT.	WIPER MOTOR SUPRESSOR
D 46	9.3	3A	561740	RR JCT BOX	PARK BRAKE STOP LIGHT
D 47	9.3	3A	561740	RR JCT BOX	CYCLOP LTS
D 48					
D 49					
D 50					
D 51					
D 52					
D 53					
D 54					
D 55	25	3A	561740	RR JCT BOX	SHIFTER INHIBIT R109
D 56	9.3	3A	561740	RR JCT BOX	PARK BRAKE STOP LTS SIGNAL BLOCKED
D 57					

No.	PAGE	AMP	#PREV.	LOCATION	FUNCTION
D 58	17	3A	561740	FR JCT BOX	RR HIGH BUOY - KNEELING
D 59	13.2	3A	561740	RR JCT BOX	A/C & HEAT BYPASS SWITCH
D 60	13.1	3A	561740	RR JCT BOX	A/C PASS. LIQ. SOL. VALVE
D 61	9.2	3A	561740	FR JCT BOX	KNEELING SIDE FR RH DIRECTIONNAL LT
D 62	13.2	3A	561740	RR JCT BOX	WATER PUMP FEED
D 63	17	3A	561740	FR JCT BOX	LAVATORY SONALERT
D 64	17	3A	561740	FR JCT BOX	WCL DOOR ALARM
D 65	13.2	3A	561740	RR JCT BOX	WATER PUMP - PRE-HEAT FEED
D 66	13.2	3A	561740	RR JCT BOX	WATER VALVE - HEAT SW. FEED
D 67	9.2	3A	561740	UNDER DASH	AUDIBLE FLASHER RLY - RH
D 68	9.2	3A	561740	UNDER DASH	AUDIBLE FLASHER RLY - LH
D 69					
D 70	18	3A	561740	FR JCT BOX	FR HIGH BUOY - KNEELING
D 71	18	3A	561740	FR JCT BOX	FR HIGH BUOY - KNEELING
D 72	18	3A	561740	FR JCT BOX	FR HIGH BUOY - KNEELING
D 73	18	3A	561740	FR JCT BOX	FR HIGH BUOY - KNEELING
D 74					
D 75	4	3A	381351	RR JCT BOX	STARTER-SUPPRESSOR COIL RLY
D 76	9.3	3A	561740	RR JCT BOX	STOP LIGHT RLY
D 77	18	3A	561740	FR JCT BOX	PARKING BRAKE - KNEELING
D 78	26	3A	561740	LH CONSOLE	PRE-HEAT WATER HEATER SW.
D 79	26	3A	561740	LH CONSOLE	PRE-HEAT WATER HEATER SW.
D 80					
D 81	18	3A	561740	FR JCT BOX	PIEZO-KNEELING
D 82	8.1	3A	561740	RR JCT BOX	FAN CLUTCH
D 83	8	3A	561740	RR JCT BOX	FAN CLUTCH W/RETARDER
D 84	13.2	3A	561740	RR JCT BOX	WATER VALVE
D 85	16.1	3A	561740	FR JCT BOX	ENTRANCE DOOR SEDAN
D 86	16	3A	561740	UNDER DASH RH	ENTRANCE DOOR SEDAN
D 87	16	3A	561740	UNDER DASH RH	ENTRANCE DOOR SEDAN
D 88	16	3A	561740	UNDER DASH RH	ENTRANCE DOOR SEDAN
D 89	16	3A	561740	UNDER DASH RH	ENTRANCE DOOR SEDAN
D 90	16	3A	561740	UNDER DASH RH	ENTRANCE DOOR SEDAN
D 91	16	3A	561740	UNDER DASH RH	ENTRANCE DOOR SEDAN
D 92	6.3	3A	561740	RR JCT. BOX	ZF TRANSMISSION
D 93	6.3	3A	561740	RR JCT. BOX	ZF TRANSMISSION
D F1	8.1	3A	561740	RR. JCT. BOX	FAN CLUTCH - SUPPRESSOR
D F2	8.1	3A	561740	RR. JCT. BOX	FAN CLUTCH - SUPPRESSOR

DIODES NUMBER CODE

No.	PAGE	AMP	#PREV.	LOCATION	FUNCTION
D 1	13.1	3A	560931	EVAP.COMP.	BYPASS VALVE
D 2					
D 3	1.1	3A	561740	RR JCT BOX	24V DISC. CUT OUT RLY
D 4	9.2	3A	561740	FR JCT BOX	WARNING HAZARD-RH
D 5	9.2	3A	561740	FR JCT BOX	WARNING HAZARD-LH
D 6	5	3A	561740	FR JCT BOX	WCL NEUT. SIGN INTERFACE TO PARK BRK TTLT
D 7					
D 8	9.5	3A	561740	FR JCT BOX	HI / LO BEAMS
D 9	12	3A	561740	FR L.H. HAT-RACK	HOSTESS & PASSENGER CHIME
D 10	9.1	3A	561740	FR JCT BOX	DAY-TIME RUN LIGHT –ENGINE NOT RUN
D 11	17	3A	561740	RR JCT BOX	LAVATORY OCCUPIED SIGN
D 12	17	3A	561740	RR JCT BOX	LAVATORY OCCUPIED SIGN
D 13	17	3A	561740	FR DEST. SIGN	FR DESTINATION SIGN
D 14	17	3A	561740	FR DEST. SIGN	FR DESTINATION SIGN
D 15	18	3A	561740	FR JCT BOX	KNEELING SYSTEM CTR-UP
D 16	18	3A	561740	FR JCT BOX	KNEELING SYSTEM CTR-DOWN
D 17	9.2	3A	561740	FR JCT BOX	WARNING HAZARD-LH
D 18	9.2	3A	561740	FR JCT BOX	WARNING HAZARD-RH
D 19	9	3A	561740	FR JCT BOX	DAYTIME RUN LTS-PARK BRK CALL SW.
D 20	9	3A	561740	FR JCT BOX	DAYTIME RUN LTS-HEAD LT SW
D 21	18	3A	561740	FR JCT BOX	KNEELING SYSTEM FEED BACK
D 22	4.2	3A	561740	FR JCT BOX	ALTERNATOR POWER IGNITION
D 23					
D 24					
D 25	11.1	3A	561740	FR JCT BOX	LUGGAGE DOOR AJAR T.T.LT.
D 26	11.1	3A	561740	FR JCT BOX	LUGGAGE DOOR AJAR T.T.LT.
D 27	11.1	3A	561740	FR JCT BOX	LUGGAGE DOOR AJAR T.T.LT.
D 28	11.1	3A	561740	FR JCT BOX	LUGGAGE DOOR AJAR T.T.LT.
D 29	11.1	3A	561740	FR JCT BOX	LUGGAGE DOOR AJAR T.T.LT.
D 30	11.1	3A	561740	FR JCT BOX	LUGGAGE DOOR AJAR T.T.LT.
D 31					
D 32					
D 33	13.2	3A	561740	UNDER DASH	PASS. REC. DAMPER SW.
D 34					
D 35	25	3A	561740	RR JCT BOX	WCL DOOR AJAR ALARM T.T.LT.
D 36	11.4	3A	561740	RR JCT BOX	CHARGEUR 24V/110V
D 37	11.4	3A	561740	RR JCT BOX	CHARGEUR 24V/110V
D 38	11.4	3A	561740	RR JCT BOX	CHARGEUR 24V/110V
D 39					
D 40					
D 41					
D 42					
D 43	10	3A	561740	LOWER WIPER MOT.	WIPER MOTOR SUPRESSOR
D 44	10	3A	561740	LOWER WIPER MOT.	WIPER MOTOR SUPRESSOR
D 45	10	3A	561740	UPPER WIPER MOT.	WIPER MOTOR SUPRESSOR
D 46	9.3	3A	561740	RR JCT BOX	PARK BRAKE STOP LIGHT
D 47	9.3	3A	561740	RR JCT BOX	CYCLOP LTS
D 48					
D 49					
D 50					
D 51					
D 52					
D 53					
D 54					
D 55	25	3A	561740	RR JCT BOX	SHIFTER INHIBIT R109
D 56	9.3	3A	561740	RR JCT BOX	PARK BRAKE STOP LTS SIGNAL BLOCKED
D 57					

No.	PAGE	AMP	#PREV.	LOCATION	FUNCTION
D 58	17	3A	561740	FR JCT BOX	RR HIGH BUOY - KNEELING
D 59	13.2	3A	561740	RR JCT BOX	A/C & HEAT BYPASS SWITCH
D 60	13.1	3A	561740	RR JCT BOX	A/C PASS. LIQ. SOL. VALVE
D 61	9.2	3A	561740	FR JCT BOX	KNEELING SIDE FR RH DIRECTIONNAL LT
D 62	13.2	3A	561740	RR JCT BOX	WATER PUMP FEED
D 63	17	3A	561740	FR JCT BOX	LAVATORY SONALERT
D 64	17	3A	561740	FR JCT BOX	WCL DOOR ALARM
D 65	13.2	3A	561740	RR JCT BOX	WATER PUMP - PRE-HEAT FEED
D 66	13.2	3A	561740	RR JCT BOX	WATER VALVE - HEAT SW. FEED
D 67	9.2	3A	561740	UNDER DASH	AUDIBLE FLASHER RLY - RH
D 68	9.2	3A	561740	UNDER DASH	AUDIBLE FLASHER RLY - LH
D 69	19.1	3A	561740	FR JCT BOX	ENGINE BRAKE – LEAKAGE SUPPRESSOR
D 70	18	3A	561740	FR JCT BOX	FR HIGH BUOY - KNEELING
D 71	18	3A	561740	FR JCT BOX	FR HIGH BUOY - KNEELING
D 72	18	3A	561740	FR JCT BOX	FR HIGH BUOY - KNEELING
D 73	18	3A	561740	FR JCT BOX	FR HIGH BUOY - KNEELING
D 74					
D 75	4	3A	381351	RR JCT BOX	STARTER-SUPPRESSOR COIL RLY
D 76	9.3	3A	561740	RR JCT BOX	STOP LIGHT RLY
D 77	18	3A	561740	FR JCT BOX	PARKING BRAKE - KNEELING
D 78	26	3A	561740	LH CONSOLE	PRE-HEAT WATER HEATER SW.
D 79	26	3A	561740	LH CONSOLE	PRE-HEAT WATER HEATER SW.
D 80					
D 81	18	3A	561740	FR JCT BOX	PIEZO-KNEELING
D 82	8.1	3A	561740	RR JCT BOX	FAN CLUTCH
D 83	8	3A	561740	RR JCT BOX	FAN CLUTCH W/RETARDER
D 84	13.2	3A	561740	RR JCT BOX	WATER VALVE
D 85	16.1	3A	561740	FR JCT BOX	ENTRANCE DOOR SEDAN
D 86	16	3A	561740	UNDER DASH RH	ENTRANCE DOOR SEDAN
D 87	16	3A	561740	UNDER DASH RH	ENTRANCE DOOR SEDAN
D 88	16	3A	561740	UNDER DASH RH	ENTRANCE DOOR SEDAN
D 89	16	3A	561740	UNDER DASH RH	ENTRANCE DOOR SEDAN
D 90	16	3A	561740	UNDER DASH RH	ENTRANCE DOOR SEDAN
D 91	16	3A	561740	UNDER DASH RH	ENTRANCE DOOR SEDAN
D 92	6.3	3A	561740	RR JCT. BOX	ZF TRANSMISSION
D 93	6.3	3A	561740	RR JCT. BOX	ZF TRANSMISSION
D F1	8.1	3A	561740	RR. JCT. BOX	FAN CLUTCH - SUPPRESSOR
D F2	8.1	3A	561740	RR. JCT. BOX	FAN CLUTCH - SUPPRESSOR

DIODES NUMBER CODE

No.	PAGE	AMP	#PREV.	LOCATION	FUNCTION
D 1	13.1	3A	560931	EVAP.COMP.	BYPASS VALVE
D 2					
D 3	1.1	3A	561740	RR JCT BOX	24V DISC. CUT OUT RLY
D 4	9.2	3A	561740	FR JCT BOX	WARNING HAZARD-RH
D 5	9.2	3A	561740	FR JCT BOX	WARNING HAZARD-LH
D 6	5	3A	561740	FR JCT BOX	WCL NEUT. SIGN INTERFACE TO PARK BRK TTLT
D 7					
D 8	9.5	3A	561740	FR JCT BOX	HI / LO BEAMS
D 9	12	3A	561740	FR L.H. HAT-RACK	HOSTESS & PASSENGER CHIME
D 10	9.1	3A	561740	FR JCT BOX	DAY-TIME RUN LIGHT –ENGINE NOT RUN
D 11	17	3A	561740	RR JCT BOX	LAVATORY OCCUPIED SIGN
D 12	17	3A	561740	RR JCT BOX	LAVATORY OCCUPIED SIGN
D 13	17	3A	561740	FR DEST. SIGN	FR DESTINATION SIGN
D 14	17	3A	561740	FR DEST. SIGN	FR DESTINATION SIGN
D 15	18.1	3A	561740	FR JCT BOX	KNEELING SYSTEM CTR-UP
D 16	18.1	3A	561740	FR JCT BOX	KNEELING SYSTEM CTR-DOWN
D 17	9.2	3A	561740	FR JCT BOX	WARNING HAZARD-LH
D 18	9.2	3A	561740	FR JCT BOX	WARNING HAZARD-RH
D 19	9	3A	561740	FR JCT BOX	DAYTIME RUN LTS-PARK BRK CALL SW.
D 20	9	3A	561740	FR JCT BOX	DAYTIME RUN LTS-HEAD LT SW
D 21	18	3A	561740	FR JCT BOX	KNEELING SYSTEM FEED BACK
D 22	4.2	3A	561740	FR JCT BOX	ALTERNATOR POWER IGNITION
D 23	18.1	3A	561740	FR JCT BOX	KNEELING SYSTEM UP ALARM – NY ONLY
D 24					
D 25	11.1	3A	561740	FR JCT BOX	LUGGAGE DOOR AJAR T.T.LT.
D 26	11.1	3A	561740	FR JCT BOX	LUGGAGE DOOR AJAR T.T.LT.
D 27	11.1	3A	561740	FR JCT BOX	LUGGAGE DOOR AJAR T.T.LT.
D 28	11.1	3A	561740	FR JCT BOX	LUGGAGE DOOR AJAR T.T.LT.
D 29	11.1	3A	561740	FR JCT BOX	LUGGAGE DOOR AJAR T.T.LT.
D 30	11.1	3A	561740	FR JCT BOX	LUGGAGE DOOR AJAR T.T.LT.
D 31					
D 32					
D 33	13.2	3A	561740	UNDER DASH	PASS. REC. DAMPER SW.
D 34					
D 35	25	3A	561740	RR JCT BOX	WCL DOOR AJAR ALARM T.T.LT.
D 36	11.4	3A	561740	RR JCT BOX	CHARGEUR 24V/110V
D 37	11.4	3A	561740	RR JCT BOX	CHARGEUR 24V/110V
D 38	11.4	3A	561740	RR JCT BOX	CHARGEUR 24V/110V
D 39					
D 40					
D 41					
D 42					
D 43	10	3A	561740	LOWER WIPER MOT.	WIPER MOTOR SUPRESSOR
D 44	10	3A	561740	LOWER WIPER MOT.	WIPER MOTOR SUPRESSOR
D 45	10	3A	561740	UPPER WIPER MOT.	WIPER MOTOR SUPRESSOR
D 46	9.3	3A	561740	RR JCT BOX	PARK BRAKE STOP LIGHT
D 47	9.3	3A	561740	RR JCT BOX	CYCLOP LTS
D 48					
D 49					
D 50					
D 51					
D 52					
D 53					
D 54					
D 55	25	3A	561740	RR JCT BOX	SHIFTER INHIBIT R109
D 56	9.3	3A	561740	RR JCT BOX	PARK BRAKE STOP LTS SIGNAL BLOCKED
D 57					

No.	PAGE	AMP	#PREV.	LOCATION	FUNCTION
D 58	17	3A	561740	FR JCT BOX	RR HIGH BUOY - KNEELING
D 59	13.2	3A	561740	RR JCT BOX	A/C & HEAT BYPASS SWITCH
D 60	13.1	3A	561740	RR JCT BOX	A/C PASS. LIQ. SOL. VALVE
D 61	9.2	3A	561740	FR JCT BOX	KNEELING SIDE FR RH DIRECTIONNAL LT
D 62	13.2	3A	561740	RR JCT BOX	WATER PUMP FEED
D 63	17	3A	561740	FR JCT BOX	LAVATORY SONALERT
D 64	17	3A	561740	FR JCT BOX	WCL DOOR ALARM
D 65	13.2	3A	561740	RR JCT BOX	WATER PUMP - PRE-HEAT FEED
D 66	13.2	3A	561740	RR JCT BOX	WATER VALVE - HEAT SW. FEED
D 67	9.2	3A	561740	UNDER DASH	AUDIBLE FLASHER RLY - RH
D 68	9.2	3A	561740	UNDER DASH	AUDIBLE FLASHER RLY - LH
D 69	19.1	3A	561740	FR JCT BOX	ENGINE BRAKE – LEAKAGE SUPPRESSOR
D 70	18	3A	561740	FR JCT BOX	FR HIGH BUOY - KNEELING
D 71	18	3A	561740	FR JCT BOX	FR HIGH BUOY - KNEELING
D 72	18	3A	561740	FR JCT BOX	FR HIGH BUOY - KNEELING
D 73	18	3A	561740	FR JCT BOX	FR HIGH BUOY - KNEELING
D 74					
D 75	4	3A	381351	RR JCT BOX	STARTER-SUPPRESSOR COIL RLY
D 76	9.3	3A	561740	RR JCT BOX	STOP LIGHT RLY
D 77	18	3A	561740	FR JCT BOX	PARKING BRAKE - KNEELING
D 78	26	3A	561740	LH CONSOLE	PRE-HEAT WATER HEATER SW.
D 79	26	3A	561740	LH CONSOLE	PRE-HEAT WATER HEATER SW.
D 80					
D 81	18	3A	561740	FR JCT BOX	PIEZO-KNEELING
D 82	8.1	3A	561740	RR JCT BOX	FAN CLUTCH
D 83	8	3A	561740	RR JCT BOX	FAN CLUTCH W/RETARDER
D 84	13.2	3A	561740	RR JCT BOX	WATER VALVE
D 85	16.1	3A	561740	FR JCT BOX	ENTRANCE DOOR SEDAN
D 86	16	3A	561740	UNDER DASH RH	ENTRANCE DOOR SEDAN
D 87	16	3A	561740	UNDER DASH RH	ENTRANCE DOOR SEDAN
D 88	16	3A	561740	UNDER DASH RH	ENTRANCE DOOR SEDAN
D 89	16	3A	561740	UNDER DASH RH	ENTRANCE DOOR SEDAN
D 90	16	3A	561740	UNDER DASH RH	ENTRANCE DOOR SEDAN
D 91	16	3A	561740	UNDER DASH RH	ENTRANCE DOOR SEDAN
D 92	6.3	3A	561740	RR JCT. BOX	ZF TRANSMISSION
D 93	6.3	3A	561740	RR JCT. BOX	ZF TRANSMISSION
D F1	8.1	3A	561740	RR. JCT. BOX	FAN CLUTCH - SUPPRESSOR
D F2	8.1	3A	561740	RR. JCT. BOX	FAN CLUTCH - SUPPRESSOR

RELAYS NUMBER CODE

No.	PAGE	COIL V	#PREV.	LOCATION	FUNCTION
R F2	8.1	24V	561707	RR JCT BOX	FAN CLUTCH W/RET. SPEED 2
R F3	8.1	24V	560772	RR JCT BOX	TIME DELAY
R LA	16.1	24V	561707	UNDER DASH RH.	ENTRANCE DOOR SEDAN (LATCH)
R LO	16.1	24V	561707	UNDER DASH RH.	ENTRANCE DOOR SEDAN (PRESS. SW.)
R LT	16.1	24V	561707	UNDER DASH RH.	ENTRANCE DOOR SEDAN (LIGHT)
R LV	16.1	24V	561707	UNDER DASH RH.	ENTRANCE DOOR SEDAN (VALVE)
R 1	1.1	24V	561991	FR JCT BOX	ENGINE RUN (24) FR
R 2	2.1	24V	561991	RR JCT BOX	ENGINE RUN (12) FR & RR
R 3					
R 4	4.1	24V	560407	RR JCT BOX	STARTING MOTOR
R 5	5.1	24V	561707	FR JCT BOX	CRUISE CTR. STOP SIGN.
R 6					
R 7	5.1	24V	561707	FR JCT BOX	FAST IDLE
R 8					
R 9	9.3	24V	561707	RR JCT BOX	BACK-UP LTS
R 10					
R 11					
R 12	7.2	12V	562092	FR JCT BOX	ELECTRICAL HORNS
R 13	9.3	24V	561707	FR JCT BOX	FOG LTS
R 14	9.1	24V	561707	FR JCT BOX	BLINKER
R 15	9.1	24V	561707	FR JCT BOX	FR MARKER LTS
R 16	9.1	24V	561707	FR JCT BOX	IDENT. & CLEARANCE LTS
R 17	9.1	24V	561707	RR JCT BOX	TAIL,LICENCE,MARKER-RR LTS
R 18	9.1	24V	561707	FR JCT BOX	D R L-PARK BRK CUT-OUT
R 19	9.1	24V	561707	FR JCT BOX	HEADLAMPS (HI)
R 20	9.1	24V	561707	FR JCT BOX	HEADLAMPS (LO)
R 21	9.2	24V	561707	FR JCT BOX	L.H. DIRECTIONNAL LT
R 22					
R 23	9.2	24V	561707	FR JCT BOX	R.H. DIRECTIONNAL LT
R 24	9.2	24V	561707	FR JCT BOX	R.H. CORNERING LT
R 25	9.2	24V	561707	FR JCT BOX	L.H. CORNERING LT
R 26	9.3	24V	561707	RR JCT BOX	STOP LTS
R 27	11.2	24V	561707	RR JCT BOX	AISLE & EMERG.EXIT - LTS
R 28	11.2	24V	561707	FR JCT BOX	DASH LTS RHEOSTAT
R 29	11.3	24V	561707	RR JCT BOX	READING LTS R.H.
R 30	11.3	24V	561707	RR JCT BOX	READING LTS L.H.
R 31	11.3	24V	561707	RR JCT BOX	GENERAL LTS
R 32	11.4	24V	561707	RR JCT BOX	24V FLUORESCENT
R 34	13.1	24V	561707	RR JCT BOX	A/C SYSTEM
R 35	13.1	24V	561707	RR JCT BOX	A/C SYSTEM
R 36	13.1	24V	561707	RR JCT BOX	A/C SYSTEM
R 37	9.2	24V	561707	FR JCT BOX	KNEELING LT
R 38	13.2	24v	561707	RR JCT BOX	A/C SYSTEM
R 39	13.2	24V	561005	EVAP. CPT.	CONDENSER FAN MOTOR
R 40	13.2	24V	561014	EVAP. CPT.	CONDENSER SPEED CTR HI
R 41	13.2	24V	561005	EVAP. CPT.	CONDENSER SPEED CTR HI
R 42					
R 43	18.1	24V	561707	FR JCT BOX	KNEELING SYSTEM
R 44	18.1	24V	561707	FR JCT BOX	KNEELING SYSTEM
R 45	13.2	24V	561707	RR JCT BOX	A/C SYSTEM
R 46					
R 47	23.1	24V	561707	GALLEY COMPT	GALLEY-LIQUID CONTAINERS
R 48	23.1	24V	561707	GALLEY COMPT	GALLEY-COFFEE MAKER
R 49	21.1	12V	562092	FR JCT BOX	ABS - SERVICE BRK RLY
R 50	13.2	24V	561005	EVAP CPT	EVAP FAN MOTOR 1ST SPEED
R 51	11.3	24V	562092	FR JCT BOX	DRIVER'S LTS RLY- ENT. DOOR SIGN.
R 52	21.1	12V	562092	FR JCT BOX	ABS - W/TR SIGN. RETARDER
R 53	1.1	24V	561991	RR JCT BOX	ENGINE RUN (24) RR
R 54	1.1	24V	561991	RR JCT BOX	12V CUT OUT RLY RR
R 55	1.1	24V	561991	RR JCT BOX	12V CUT OUT RLY FR
R 56	21.1				ATC LAMP
R 57	9.1	24V	561707	FR JCT BOX	DAY'S BLINKER
R 58	21.1sp1	12V	562092	FR JCT BOX	ATC TAG AXLE BREAK
R 59	9.3	12V	562092	RR JCT BOX	DOCKING LTS

No.	PAGE	COIL V	#PREV.	LOCATION	FUNCTION
R 60	13.2	24V	561707	EVAP CPT	EVAP FAN CONTROL SPEED 2
R 61	9.3	24V	561707	RR JCT BOX	STOP LTS-JACOB & RET. SIGNAL
R 62	5.1	24V	561707	FR JCT BOX	DDEC PARKING BRAKE RELAY
R 63	13.2	24V	560772	EVAP. CPT.	TIME DELAY EVAP. FAN
R 64					
R 65					
R 66	20.3	24V	561707	SS JCT PANEL	SOUND SYSTEM VIDEO
R 67	20.1	12V	562092	SS JCT PANEL	SOUND SYSTEM RADIO
R 68	20.1	24V	561991	SS JCT PANEL	SOUND SYSTEM AMPLIFIER
R 69					
R 70					
R 71					
R 72	23.1	24V	561005	LAST LUGG. CPT.	INVERTER CUT OFF
R 73	23.1SP	24V	561005	LAST LUGG. CPT.	INVERTER CUT OFF
R 74					
R 75					
R 76					
R 77					
R 78	1.1	12V	562092	FR JCT BOX	MASTER SWITCH
R 79	23	24V	561707	GALLEY CPT.	GALLEY-REFRIGERATOR
R 80	11.1	24V	561707	RR JCT BOX	ENGINE COMPARTMENT LTS
R 81	17.1	24V	561707	LAVATORY SW.	LAVATORY TIMER PUMP
R 82	19	24V	561707	FR JCT BOX	RETARDER WT
R 83	26	24V	561707	RR JCT BOX	PRE-HEAT WATER HEATER
R 84	8	24V	561707	RR JCT BOX	FAN CLUTCH-FIRST SPEED
R 85	8	24V	561707	RR JCT BOX	FAN CLUTCH-SECOND SPEED
R 86					
R 87	19	24V	561707	RR JCT BOX	ENGINE BRAKE REQUEST WT
R 88					
R 89					
R 90	18.1	24V	561707	FR JCT BOX	KNEELING SYSTEM
R 91					
R 92					
R 93					
R 94	25	24V	561707	RR JCT BOX	WCL - SYSTEM
R 95	25	24V	561707	RR JCT BOX	WCL - MAGNETIC SW. SIGN.
R 96	25	24V	561707	RR JCT BOX	WCL - DOOR AJAR ALARM
R 97	25	24V	561707	RR JCT BOX	WCL - DOOR AJAR PARK. BRAKE
R 98	25	24V	561707	RR JCT BOX	WCL -.ALTERNATOR SIGNAL
R 99	8	24V	561707	RR JCT BOX	RADIATOR FAN CLUTCH
R 100					
R 101				RR JCT BOX	FUEL FILTER HEATER
R 102	17	24V	561707	RR JCT BOX	LAVATORY DOME
R 103	13.3	24V	561707	RR JCT BOX	HAT-RACK FAN
R 104	13.3	24V	561707	RR JCT BOX	HAT-RACK FAN - L.H.
R 105	13.3	24V	561707	RR JCT BOX	HAT-RACK FAN - R.H.
R 106	17.1	24V	561707	RR JCT BOX	LAVATORY FAN
R 107					
R 109	25	24V	561707	RR JCT BOX	THROTTLE INHIBIT
R 119					
R PS	4.1SP1	24V	561707	FR JCT BOX	IDLE POWER SHUT DOWN
R ZF1	15.1	12V	563033	FR JCT BOX	STEERING CTL UNIT - OPTIONNAL
R ZF2	6.3	12V	562092	RR JCT BOX	EASY START CTL – ZF TRANSM. OPTION
V IMN	6	12V	562092	RR JCT BOX	VIM WORLD TR.-NEUTRAL SIGNAL
V IMR	6	12V	562092	RR JCT BOX	VIM WORLD TR.-B/U SIGNAL
V IM1	6	12V	562092	RR JCT BOX	VIM WORLD TR.-OUTPUT 1
V IM2	6	12V	562092	RR JCT BOX	VIM WORLD TR.-OUTPUT 2 ENG. BRK DISABLE
V IM3	6	12V	562092	RR JCT BOX	VIM WORLD TR.-OUTPUT 3 SPD SW. 5MPH NO NC
V IM4	6.1	12V	562092	RR JCT BOX	VIM WORLD TR.-OUTPUT4 RETARD. ON SIGNAL

RELAYS NUMBER CODE

No.	PAGE	COIL V	#PREV.	LOCATION	FUNCTION	No.	PAGE	COIL V	#PREV.	LOCATION	FUNCTION

RELAYS NUMBER CODE

No.	PAGE	COIL V	#PREV.	LOCATION	FUNCTION
R F2	8.1	24V	561707	RR JCT BOX	FAN CLUTCH W/RET. SPEED 2
R F3	8.1	24V	560772	RR JCT BOX	TIME DELAY
R LA	16.1	24V	561707	UNDER DASH RH.	ENTRANCE DOOR SEDAN (LATCH)
R LO	16.1	24V	561707	UNDER DASH RH.	ENTRANCE DOOR SEDAN (PRESS. SW.)
R LT	16.1	24V	561707	UNDER DASH RH.	ENTRANCE DOOR SEDAN (LIGHT)
R LV	16.1	24V	561707	UNDER DASH RH.	ENTRANCE DOOR SEDAN (VALVE)
R 1	1.1	24V	561991	FR JCT BOX	ENGINE RUN (24) FR
R 2	2.1	24V	561991	RR JCT BOX	ENGINE RUN (12) FR & RR
R 3					
R 4	4.1	24V	560407	RR JCT BOX	STARTING MOTOR
R 5	5.1	24V	561707	FR JCT BOX	CRUISE CTR. STOP SIGN.
R 6					
R 7	5.1	24V	561707	FR JCT BOX	FAST IDLE
R 8					
R 9	9.3	24V	561707	RR JCT BOX	BACK-UP LTS
R 10					
R 11					
R 12	7.2	12V	562092	FR JCT BOX	ELECTRICAL HORNS
R 13	9.3	24V	561707	FR JCT BOX	FOG LTS
R 14	9.1	24V	561707	FR JCT BOX	BLINKER
R 15	9.1	24V	561707	FR JCT BOX	FR MARKER LTS
R 16	9.1	24V	561707	FR JCT BOX	IDENT. & CLEARANCE LTS
R 17	9.1	24V	561707	RR JCT BOX	TAIL,LICENCE,MARKER-RR LTS
R 18	9.1	24V	561707	FR JCT BOX	D R L-PARK BRK CUT-OUT
R 19	9.1	24V	561707	FR JCT BOX	HEADLAMPS (HI)
R 20	9.1	24V	561707	FR JCT BOX	HEADLAMPS (LO)
R 21	9.2	24V	561707	FR JCT BOX	L.H. DIRECTIONNAL LT
R 22					
R 23	9.2	24V	561707	FR JCT BOX	R.H. DIRECTIONNAL LT
R 24	9.2	24V	561707	FR JCT BOX	R.H. CORNERING LT
R 25	9.2	24V	561707	FR JCT BOX	L.H. CORNERING LT
R 26	9.3	24V	561707	RR JCT BOX	STOP LTS
R 27	11.2	24V	561707	RR JCT BOX	AISLE & EMERG.EXIT - LTS
R 28	11.2	24V	561707	FR JCT BOX	DASH LTS RHEOSTAT
R 29	11.3	24V	561707	RR JCT BOX	READING LTS R.H.
R 30	11.3	24V	561707	RR JCT BOX	READING LTS L.H.
R 31	11.3	24V	561707	RR JCT BOX	GENERAL LTS
R 32	11.4	24V	561707	RR JCT BOX	24V FLUORESCENT
R 34	13.1	24V	561707	RR JCT BOX	A/C SYSTEM
R 35	13.1	24V	561707	RR JCT BOX	A/C SYSTEM
R 36	13.1	24V	561707	RR JCT BOX	A/C SYSTEM
R 37	9.2	24V	561707	FR JCT BOX	KNEELING LT
R 38	13.2	24v	561707	RR JCT BOX	A/C SYSTEM
R 39	13.2	24V	561005	EVAP. CPT.	CONDENSER FAN MOTOR
R 40	13.2	24V	561014	EVAP. CPT.	CONDENSER SPEED CTR HI
R 41	13.2	24V	561005	EVAP. CPT.	CONDENSER SPEED CTR HI
R 42					
R 43	18.1	24V	561707	FR JCT BOX	KNEELING SYSTEM
R 44	18.1	24V	561707	FR JCT BOX	KNEELING SYSTEM
R 45	13.2	24V	561707	RR JCT BOX	A/C SYSTEM
R 46					
R 47	23.1	24V	561707	GALLEY COMPT	GALLEY-LIQUID CONTAINERS
R 48	23.1	24V	561707	GALLEY COMPT	GALLEY-COFFEE MAKER
R 49	21.1	12V	562092	FR JCT BOX	ABS - SERVICE BRK RLY
R 50	13.2	24V	561005	EVAP CPT	EVAP FAN MOTOR 1ST SPEED
R 51	11.3	24V	562092	FR JCT BOX	DRIVER'S LTS RLY- ENT. DOOR SIGN.
R 52	21.1	12V	562092	FR JCT BOX	ABS - W/TR SIGN. RETARDER
R 53	1.1	24V	561991	RR JCT BOX	ENGINE RUN (24) RR
R 54	1.1	24V	561991	RR JCT BOX	12V CUT OUT RLY RR
R 55	1.1	24V	561991	RR JCT BOX	12V CUT OUT RLY FR
R 56	21.1				ATC LAMP
R 57	9.1	24V	561707	FR JCT BOX	DAY'S BLINKER
R 58	21.1sp1	12V	562092	FR JCT BOX	ATC TAG AXLE BREAK
R 59	9.3	12V	562092	RR JCT BOX	DOCKING LTS

No.	PAGE	COIL V	#PREV.	LOCATION	FUNCTION
R 60	13.2	24V	561707	EVAP CPT	EVAP FAN CONTROL SPEED 2
R 61	9.3	24V	561707	RR JCT BOX	STOP LTS-JACOB & RET. SIGNAL
R 62	5.1	24V	561707	FR JCT BOX	DDEC PARKING BRAKE RELAY
R 63	13.2	24V	560772	EVAP. CPT.	TIME DELAY EVAP. FAN
R 64					
R 65					
R 66	20.3	24V	561707	SS JCT PANEL	SOUND SYSTEM VIDEO
R 67	20.1	12V	562092	SS JCT PANEL	SOUND SYSTEM RADIO
R 68	20.1	24V	561991	SS JCT PANEL	SOUND SYSTEM AMPLIFIER
R 69					
R 70					
R 71					
R 72	23.1	24V	561005	LAST LUGG. CPT.	INVERTER CUT OFF
R 73	23.1SP	24V	561005	LAST LUGG. CPT.	INVERTER CUT OFF
R 74					
R 75					
R 76					
R 77					
R 78	1.1	12V	562092	FR JCT BOX	MASTER SWITCH
R 79	23	24V	561707	GALLEY CPT.	GALLEY-REFRIGERATOR
R 80	11.1	24V	561707	RR JCT BOX	ENGINE COMPARTMENT LTS
R 81	17.1	24V	561707	LAVATORY SW.	LAVATORY TIMER PUMP
R 82	19	24V	561707	FR JCT BOX	RETARDER WT
R 83	26	24V	561707	RR JCT BOX	PRE-HEAT WATER HEATER
R 84	8	24V	561707	RR JCT BOX	FAN CLUTCH-FIRST SPEED
R 85	8	24V	561707	RR JCT BOX	FAN CLUTCH-SECOND SPEED
R 86					
R 87	19	24V	561707	RR JCT BOX	ENGINE BRAKE REQUEST WT
R 88					
R 89					
R 90	18.1	24V	561707	FR JCT BOX	KNEELING SYSTEM
R 91					
R 92					
R 93					
R 94	25	24V	561707	RR JCT BOX	WCL - SYSTEM
R 95	25	24V	561707	RR JCT BOX	WCL - MAGNETIC SW. SIGN.
R 96	25	24V	561707	RR JCT BOX	WCL - DOOR AJAR ALARM
R 97	25	24V	561707	RR JCT BOX	WCL - DOOR AJAR PARK. BRAKE
R 98	25	24V	561707	RR JCT BOX	WCL -.ALTERNATOR SIGNAL
R 99	8	24V	561707	RR JCT BOX	RADIATOR FAN CLUTCH
R 100					
R 101				RR JCT BOX	FUEL FILTER HEATER
R 102	17	24V	561707	RR JCT BOX	LAVATORY DOME
R 103	13.3	24V	561707	RR JCT BOX	HAT-RACK FAN
R 104	13.3	24V	561707	RR JCT BOX	HAT-RACK FAN - L.H.
R 105	13.3	24V	561707	RR JCT BOX	HAT-RACK FAN - R.H.
R 106	17.1	24V	561707	RR JCT BOX	LAVATORY FAN
R 107					
R 109	25	24V	561707	RR JCT BOX	THROTTLE INHIBIT
R 119					
R PS	4.1SP1	24V	561707	FR JCT BOX	IDLE POWER SHUT DOWN
R ZF1	15.1	12V	563033	FR JCT BOX	STEERING CTL UNIT - OPTIONNAL
R ZF2	6.3	24V	561707	RR JCT BOX	EASY START CTL – ZF TRANSM. OPTION
R ZF3	6.3	24V	561707	RR JCT BOX	DECELERATION LTS – ZF TRANSM. OPTION
V IMN	6	12V	562092	RR JCT BOX	VIM WORLD TR.-NEUTRAL SIGNAL
V IMR	6	12V	562092	RR JCT BOX	VIM WORLD TR.-B/U SIGNAL
V IM1	6	12V	562092	RR JCT BOX	VIM WORLD TR.-OUTPUT 1
V IM2	6	12V	562092	RR JCT BOX	VIM WORLD TR.-OUTPUT 2 ENG. BRK DISABLE
V IM3	6	12V	562092	RR JCT BOX	VIM WORLD TR.-OUTPUT 3 SPD SW. 5MPH NO NC
V IM4	6.1	12V	562092	RR JCT BOX	VIM WORLD TR.-OUTPUT4 RETARD. ON SIGNAL

RELAYS NUMBER CODE

No.	PAGE	COIL V	#PREV.	LOCATION	FUNCTION	No.	PAGE	COIL V	#PREV.	LOCATION	FUNCTION

RELAYS NUMBER CODE

No.	PAGE	COIL V	#PREV.	LOCATION	FUNCTION
R F2	8.1	24V	561707	RR JCT BOX	FAN CLUTCH W/RET. SPEED 2
R F3	8.1	24V	560772	RR JCT BOX	TIME DELAY
R LA	16.1	24V	561707	UNDER DASH RH.	ENTRANCE DOOR SEDAN (LATCH)
R LO	16.1	24V	561707	UNDER DASH RH.	ENTRANCE DOOR SEDAN (PRESS. SW.)
R LT	16.1	24V	561707	UNDER DASH RH.	ENTRANCE DOOR SEDAN (LIGHT)
R LV	16.1	24V	561707	UNDER DASH RH.	ENTRANCE DOOR SEDAN (VALVE)
R 1	1.1	24V	561991	FR JCT BOX	ENGINE RUN (24) FR
R 2	2.1	24V	561991	RR JCT BOX	ENGINE RUN (12) FR & RR
R 3					
R 4	4.1	24V	560407	RR JCT BOX	STARTING MOTOR
R 5	5.1	24V	561707	FR JCT BOX	CRUISE CTR. STOP SIGN.
R 6					
R 7	5.1	24V	561707	FR JCT BOX	FAST IDLE
R 8					
R 9	9.3	24V	561707	RR JCT BOX	BACK-UP LTS
R 10					
R 11	6.1	24V	561707	RR JCT BOX	TRANSMISSION INHIBIT
R 12	7.2	12V	562092	FR JCT BOX	ELECTRICAL HORNS
R 13	9.3	24V	561707	FR JCT BOX	FOG LTS
R 14	9.1	24V	561707	FR JCT BOX	BLINKER
R 15	9.1	24V	561707	FR JCT BOX	FR MARKER LTS
R 16	9.1	24V	561707	FR JCT BOX	IDENT. & CLEARANCE LTS
R 17	9.1	24V	561707	RR JCT BOX	TAIL,LICENCE,MARKER-RR LTS
R 18	9.1	24V	561707	FR JCT BOX	D R L-PARK BRK CUT-OUT
R 19	9.1	24V	561707	FR JCT BOX	HEADLAMPS (HI)
R 20	9.1	24V	561707	FR JCT BOX	HEADLAMPS (LO)
R 21	9.2	24V	561707	FR JCT BOX	L.H. DIRECTIONNAL LT
R 22					
R 23	9.2	24V	561707	FR JCT BOX	R.H. DIRECTIONNAL LT
R 24	9.2	24V	561707	FR JCT BOX	R.H. CORNERING LT
R 25	9.2	24V	561707	FR JCT BOX	L.H. CORNERING LT
R 26	9.3	24V	561707	RR JCT BOX	STOP LTS
R 27	11.2	24V	561707	RR JCT BOX	AISLE & EMERG.EXIT - LTS
R 28	11.2	24V	561707	FR JCT BOX	DASH LTS RHEOSTAT
R 29	11.3	24V	561707	RR JCT BOX	READING LTS R.H.
R 30	11.3	24V	561707	RR JCT BOX	READING LTS L.H.
R 31	11.3	24V	561707	RR JCT BOX	GENERAL LTS
R 32	11.4	24V	561707	RR JCT BOX	24V FLUORESCENT
R 34	13.1	24V	561707	RR JCT BOX	A/C SYSTEM
R 35	13.1	24V	561707	RR JCT BOX	A/C SYSTEM
R 36	13.1	24V	561707	RR JCT BOX	A/C SYSTEM
R 37	9.2	24V	561707	FR JCT BOX	KNEELING LT
R 38	13.2	24v	561707	RR JCT BOX	A/C SYSTEM
R 39	13.2	24V	561005	EVAP. CPT.	CONDENSER FAN MOTOR
R 40	13.2	24V	561014	EVAP. CPT.	CONDENSER SPEED CTR HI
R 41	13.2	24V	561005	EVAP. CPT.	CONDENSER SPEED CTR HI
R 42					
R 43	18.1	24V	561707	FR JCT BOX	KNEELING SYSTEM
R 44	18.1	24V	561707	FR JCT BOX	KNEELING SYSTEM
R 45	13.2	24V	561707	RR JCT BOX	A/C SYSTEM
R 46					
R 47	23.1	24V	561707	GALLEY COMPT	GALLEY-LIQUID CONTAINERS
R 48	23.1	24V	561707	GALLEY COMPT	GALLEY-COFFEE MAKER
R 49	21.1	12V	562092	FR JCT BOX	ABS - SERVICE BRK RLY
R 50	13.2	24V	561005	EVAP CPT	EVAP FAN MOTOR 1ST SPEED
R 51	11.3	24V	562092	FR JCT BOX	DRIVER'S LTS RLY- ENT. DOOR SIGN.
R 52	21.1	12V	562092	FR JCT BOX	ABS - W/TR SIGN. RETARDER
R 53	1.1	24V	561991	RR JCT BOX	ENGINE RUN (24) RR
R 54	1.1	24V	561991	RR JCT BOX	12V CUT OUT RLY RR
R 55	1.1	24V	561991	RR JCT BOX	12V CUT OUT RLY FR
R 56	21.1				ATC LAMP
R 57	9.1	24V	561707	FR JCT BOX	DAY'S BLINKER
R 58	21.1sp1	12V	562092	FR JCT BOX	ATC TAG AXLE BREAK
R 59	9.3	12V	562092	RR JCT BOX	DOCKING LTS

No.	PAGE	COIL V	#PREV.	LOCATION	FUNCTION
R 60	13.2	24V	561707	EVAP CPT	EVAP FAN CONTROL SPEED 2
R 61	9.3	24V	561707	RR JCT BOX	STOP LTS-JACOB & RET. SIGNAL
R 62	5.1	24V	561707	FR JCT BOX	DDEC PARKING BRAKE RELAY
R 63	13.2	24V	560772	EVAP. CPT.	TIME DELAY EVAP. FAN
R 64					
R 65					
R 66	20.3	24V	561707	SS JCT PANEL	SOUND SYSTEM VIDEO
R 67	20.1	12V	562092	SS JCT PANEL	SOUND SYSTEM RADIO
R 68	20.1	24V	561991	SS JCT PANEL	SOUND SYSTEM AMPLIFIER
R 69					
R 70					
R 71					
R 72	23.1	24V	561005	LAST LUGG. CPT.	INVERTER CUT OFF
R 73	23.1SP	24V	561005	LAST LUGG. CPT.	INVERTER CUT OFF
R 74					
R 75					
R 76					
R 77					
R 78	1.1	12V	562092	FR JCT BOX	MASTER SWITCH
R 79	23	24V	561707	GALLEY CPT.	GALLEY-REFRIGERATOR
R 80	11.1	24V	561707	RR JCT BOX	ENGINE COMPARTMENT LTS
R 81	17.1	24V	561707	LAVATORY SW.	LAVATORY TIMER PUMP
R 82	19	24V	561707	FR JCT BOX	RETARDER WT
R 83	26	24V	561707	RR JCT BOX	PRE-HEAT WATER HEATER
R 84	8	24V	561707	RR JCT BOX	FAN CLUTCH-FIRST SPEED
R 85	8	24V	561707	RR JCT BOX	FAN CLUTCH-SECOND SPEED
R 86					
R 87	19	24V	561707	RR JCT BOX	ENGINE BRAKE REQUEST WT
R 88					
R 89					
R 90	18.1	24V	561707	FR JCT BOX	KNEELING SYSTEM
R 91					
R 92					
R 93					
R 94	25	24V	561707	RR JCT BOX	WCL - SYSTEM
R 95	25	24V	561707	RR JCT BOX	WCL - MAGNETIC SW. SIGN.
R 96	25	24V	561707	RR JCT BOX	WCL - DOOR AJAR ALARM
R 97	25	24V	561707	RR JCT BOX	WCL - DOOR AJAR PARK. BRAKE
R 98	25	24V	561707	RR JCT BOX	WCL -.ALTERNATOR SIGNAL
R 99	8	24V	561707	RR JCT BOX	RADIATOR FAN CLUTCH
R 100					
R 101				RR JCT BOX	FUEL FILTER HEATER
R 102	17	24V	561707	RR JCT BOX	LAVATORY DOME
R 103	13.3	24V	561707	RR JCT BOX	HAT-RACK FAN
R 104	13.3	24V	561707	RR JCT BOX	HAT-RACK FAN - L.H.
R 105	13.3	24V	561707	RR JCT BOX	HAT-RACK FAN - R.H.
R 106	17.1	24V	561707	RR JCT BOX	LAVATORY FAN
R 107					
R 109	25	24V	561707	RR JCT BOX	THROTTLE INHIBIT
R 119					
R PS	4.1SP1	24V	561707	FR JCT BOX	IDLE POWER SHUT DOWN
R ZF1	15.1	12V	563033	FR JCT BOX	STEERING CTL UNIT - OPTIONNAL
R ZF2	6.3	24V	561707	RR JCT BOX	EASY START CTL – ZF TRANSM. OPTION
R ZF3	6.3	24V	561707	RR JCT BOX	DECELERATION LTS – ZF TRANSM. OPTION
V IMN	6	12V	562092	RR JCT BOX	VIM WORLD TR.-NEUTRAL SIGNAL
V IMR	6	12V	562092	RR JCT BOX	VIM WORLD TR.-B/U SIGNAL
V IM1	6	12V	562092	RR JCT BOX	VIM WORLD TR.-OUTPUT 1
V IM2	6	12V	562092	RR JCT BOX	VIM WORLD TR.-OUTPUT 2 ENG. BRK DISABLE
V IM3	6	12V	562092	RR JCT BOX	VIM WORLD TR.-OUTPUT 3 SPD SW. 5MPH NO NC
V IM4	6.1	12V	562092	RR JCT BOX	VIM WORLD TR.-OUTPUT4 RETARD. ON SIGNAL

RELAYS NUMBER CODE

No.	PAGE	COIL V	#PREV.	LOCATION	FUNCTION	No.	PAGE	COIL V	#PREV.	LOCATION	FUNCTION

RELAYS NUMBER CODE

No.	PAGE	COIL V	#PREV.	LOCATION	FUNCTION
R F2	8.1	24V	561707	RR JCT BOX	FAN CLUTCH W/RET. SPEED 2
R F3	8.1	24V	560772	RR JCT BOX	TIME DELAY
R LA	16.1	24V	561707	UNDER DASH RH.	ENTRANCE DOOR SEDAN (LATCH)
R LO	16.1	24V	561707	UNDER DASH RH.	ENTRANCE DOOR SEDAN (PRESS. SW.)
R LT	16.1	24V	561707	UNDER DASH RH.	ENTRANCE DOOR SEDAN (LIGHT)
R LV	16.1	24V	561707	UNDER DASH RH.	ENTRANCE DOOR SEDAN (VALVE)
R 1	1.1	24V	561991	FR JCT BOX	ENGINE RUN (24) FR
R 2	2.1	24V	561991	RR JCT BOX	ENGINE RUN (12) FR & RR
R 3					
R 4	4.1	24V	560407	RR JCT BOX	STARTING MOTOR
R 5	5.1	24V	561707	FR JCT BOX	CRUISE CTR. STOP SIGN.
R 6					
R 7	5.1	24V	561707	FR JCT BOX	FAST IDLE
R 8					
R 9	9.3	24V	561707	RR JCT BOX	BACK-UP LTS
R 10					
R 11	6.1	24V	561707	RR JCT BOX	TRANSMISSION INHIBIT
R 12	7.2	12V	562092	FR JCT BOX	ELECTRICAL HORNS
R 13	9.3	24V	561707	FR JCT BOX	FOG LTS
R 14	9.1	24V	561707	FR JCT BOX	BLINKER
R 15	9.1	24V	561707	FR JCT BOX	FR MARKER LTS
R 16	9.1	24V	561707	FR JCT BOX	IDENT. & CLEARANCE LTS
R 17	9.1	24V	561707	RR JCT BOX	TAIL,LICENCE,MARKER-RR LTS
R 18	9.1	24V	561707	FR JCT BOX	D R L-PARK BRK CUT-OUT
R 19	9.1	24V	561707	FR JCT BOX	HEADLAMPS (HI)
R 20	9.1	24V	561707	FR JCT BOX	HEADLAMPS (LO)
R 21	9.2	24V	561707	FR JCT BOX	L.H. DIRECTIONNAL LT
R 22					
R 23	9.2	24V	561707	FR JCT BOX	R.H. DIRECTIONNAL LT
R 24	9.2	24V	561707	FR JCT BOX	R.H. CORNERING LT
R 25	9.2	24V	561707	FR JCT BOX	L.H. CORNERING LT
R 26	9.3	24V	561707	RR JCT BOX	STOP LTS
R 27	11.2	24V	561707	RR JCT BOX	AISLE & EMERG.EXIT - LTS
R 28	11.2	24V	561707	FR JCT BOX	DASH LTS RHEOSTAT
R 29	11.3	24V	561707	RR JCT BOX	READING LTS R.H.
R 30	11.3	24V	561707	RR JCT BOX	READING LTS L.H.
R 31	11.3	24V	561707	RR JCT BOX	GENERAL LTS
R 32	11.4	24V	561707	RR JCT BOX	24V FLUORESCENT
R 34	13.1	24V	561707	RR JCT BOX	A/C SYSTEM
R 35	13.1	24V	561707	RR JCT BOX	A/C SYSTEM
R 36	13.1	24V	561707	RR JCT BOX	A/C SYSTEM
R 37	9.2	24V	561707	FR JCT BOX	KNEELING LT
R 38	13.2	24v	561707	RR JCT BOX	A/C SYSTEM
R 39	13.2	24V	561005	EVAP. CPT.	CONDENSER FAN MOTOR
R 40	13.2	24V	561014	EVAP. CPT.	CONDENSER SPEED CTR HI
R 41	13.2	24V	561005	EVAP. CPT.	CONDENSER SPEED CTR HI
R 42					
R 43	18.1	24V	561707	FR JCT BOX	KNEELING SYSTEM
R 44	18.1	24V	561707	FR JCT BOX	KNEELING SYSTEM
R 45	13.2	24V	561707	RR JCT BOX	A/C SYSTEM
R 46					
R 47	23.1	24V	561707	GALLEY COMPT	GALLEY-LIQUID CONTAINERS
R 48	23.1	24V	561707	GALLEY COMPT	GALLEY-COFFEE MAKER
R 49	21.1	12V	562092	FR JCT BOX	ABS - SERVICE BRK RLY
R 50	13.2	24V	561005	EVAP CPT	EVAP FAN MOTOR 1ST SPEED
R 51	11.3	24V	562092	FR JCT BOX	DRIVER'S LTS RLY- ENT. DOOR SIGN.
R 52	21.1	12V	562092	FR JCT BOX	ABS - W/TR SIGN. RETARDER
R 53	1.1	24V	561991	RR JCT BOX	ENGINE RUN (24) RR
R 54	1.1	24V	561991	RR JCT BOX	12V CUT OUT RLY RR
R 55	1.1	24V	561991	RR JCT BOX	12V CUT OUT RLY FR
R 56	21.1				ATC LAMP
R 57	9.1	24V	561707	FR JCT BOX	DAY'S BLINKER
R 58	21.1sp1	12V	562092	FR JCT BOX	ATC TAG AXLE BREAK
R 59	9.3	12V	562092	RR JCT BOX	DOCKING LTS

No.	PAGE	COIL V	#PREV.	LOCATION	FUNCTION
R 60	13.2	24V	561707	EVAP CPT	EVAP FAN CONTROL SPEED 2
R 61	9.3	24V	561707	RR JCT BOX	STOP LTS-JACOB & RET. SIGNAL
R 62	5.1	24V	561707	FR JCT BOX	DDEC PARKING BRAKE RELAY
R 63	13.2	24V	560772	EVAP. CPT.	TIME DELAY EVAP. FAN
R 64					
R 65					
R 66	20.3	24V	561707	SS JCT PANEL	SOUND SYSTEM VIDEO
R 67	20.1	12V	562092	SS JCT PANEL	SOUND SYSTEM RADIO
R 68	20.1	24V	561991	SS JCT PANEL	SOUND SYSTEM AMPLIFIER
R 69					
R 70					
R 71					
R 72	23.1	24V	561005	LAST LUGG. CPT.	INVERTER CUT OFF
R 73	23.1SP	24V	561005	LAST LUGG. CPT.	INVERTER CUT OFF
R 74					
R 75					
R 76					
R 77					
R 78	1.1	12V	562092	FR JCT BOX	MASTER SWITCH
R 79	23	24V	561707	GALLEY CPT.	GALLEY-REFRIGERATOR
R 80	11.1	24V	561707	RR JCT BOX	ENGINE COMPARTMENT LTS
R 81	17.1	24V	561707	LAVATORY SW.	LAVATORY TIMER PUMP
R 82	19	24V	561707	FR JCT BOX	RETARDER WT
R 83	26	24V	561707	RR JCT BOX	PRE-HEAT WATER HEATER
R 84	8	24V	561707	RR JCT BOX	FAN CLUTCH-FIRST SPEED
R 85	8	24V	561707	RR JCT BOX	FAN CLUTCH-SECOND SPEED
R 86					
R 87	19	24V	561707	RR JCT BOX	ENGINE BRAKE REQUEST WT
R 88					
R 89					
R 90	18.1	24V	561707	FR JCT BOX	KNEELING SYSTEM
R 91					
R 92					
R 93					
R 94	25	24V	561707	RR JCT BOX	WCL - SYSTEM
R 95	25	24V	561707	RR JCT BOX	WCL - MAGNETIC SW. SIGN.
R 96	25	24V	561707	RR JCT BOX	WCL - DOOR AJAR ALARM
R 97	25	24V	561707	RR JCT BOX	WCL - DOOR AJAR PARK. BRAKE
R 98	25	24V	561707	RR JCT BOX	WCL -.ALTERNATOR SIGNAL
R 99	8	24V	561707	RR JCT BOX	RADIATOR FAN CLUTCH
R 100					
R 101				RR JCT BOX	FUEL FILTER HEATER
R 102	17	24V	561707	RR JCT BOX	LAVATORY DOME
R 103	13.3	24V	561707	RR JCT BOX	HAT-RACK FAN
R 104	13.3	24V	561707	RR JCT BOX	HAT-RACK FAN - L.H.
R 105	13.3	24V	561707	RR JCT BOX	HAT-RACK FAN - R.H.
R 106	17.1	24V	561707	RR JCT BOX	LAVATORY FAN
R 107					
R 109	25	24V	561707	RR JCT BOX	THROTTLE INHIBIT
R 119					
R PS	4.1SP1	24V	561707	FR JCT BOX	IDLE POWER SHUT DOWN
R ZF1	15.1	12V	563033	FR JCT BOX	STEERING CTL UNIT - OPTIONNAL
R ZF2	6.3	24V	561707	RR JCT BOX	EASY START CTL – ZF TRANSM. OPTION
R ZF3	9.3	24V	561707	RR JCT BOX	DECELERATION LTS – ZF TRANSM. OPTION
V IMN	6	12V	562092	RR JCT BOX	VIM WORLD TR.-NEUTRAL SIGNAL
V IMR	6	12V	562092	RR JCT BOX	VIM WORLD TR.-B/U SIGNAL
V IM1	6	12V	562092	RR JCT BOX	VIM WORLD TR.-OUTPUT 1
V IM2	6	12V	562092	RR JCT BOX	VIM WORLD TR.-OUTPUT 2 ENG. BRK DISABLE
V IM3	6	12V	562092	RR JCT BOX	VIM WORLD TR.-OUTPUT 3 SPD SW. 5MPH NO NC
V IM4	6.1	12V	562092	RR JCT BOX	VIM WORLD TR.-OUTPUT4 RETARD. ON SIGNAL

RELAYS NUMBER CODE

No.	PAGE	COIL V	#PREV.	LOCATION	FUNCTION	No.	PAGE	COIL V	#PREV.	LOCATION	FUNCTION

RESISTORS NUMBER CODE

No.	PAGE	OHM(S)	#PREV.	LOCATION	FUNCTION
RS 1	5	11 K	561898	FR JCT BOX	FAST IDLE DDEC CONTROL
RS 2	5	3.6 K	561897	FR JCT BOX	FAST IDLE DDEC CONTROL
RS 3	9.3	1 (2)	561537	FR JCT BOX	FOG LT - RH
RS 4	9.3	1 (2)	561537	FR JCT BOX	FOG LT - LH
RS 5	9.2	1 (2)	061976	FR JCT BOX	CORNERING LT - LH
RS 6	16.1	5	563006	RH UNDER DASH	VOLTAGE DIV. OPEN DOOR SOL.
RS 7	9.3	.82 (2)	060806	RR JCT BOX	PARKING BRAKE STOP LTS
RS 8	9.2	1 (2)	061976	FR JCT BOX	CORNERING LT - RH
RS 9	9.3	1 (2)	061976	RR JCT BOX	DOCKING LT - RH
RS 10	9.3	1 (2)	061976	RR JCT BOX	DOCKING LT - LH
RS 11	22	12	561191	FR TOP	DEFROSTER SPEED
RS 12	22	12	561191	FR TOP	DEFROSTER SPEED
RS 13	17	80 (2)	562108	FR TOP	FR DESTINATION SIGN
RS 14					
RS 15					
RS 16					
RS 17	7	220	562498	FR JCT BOX	FIRE ALARM
RS 18	8	75 K	064208	RR JCT BOX	FAN CLUTCH W/RETARDER
RS 19	13.2	330K	065755	EVAP. CPT.	TIME DELAY RELAY EVAP. FAN
RS 20	15	1 K	562470	RR JCT BOX	WORLD TR. SPEED TO DDEC III
RS 21	22	15K	562908	DASH	CURRENT LIMIT FOR LED
RS 24	9.1	1.5K	562908	DASH	CURRENT LIMIT FOR LED
RS 25	9.3	1.5K	562908	DASH	CURRENT LIMIT FOR LED
RS 26	10	1.5K	562908	DASH	CURRENT LIMIT FOR LED
RS 28	26.1	1.5K	562908	DASH	CURRENT LIMIT FOR LED
RS 29	23.1	1.5K	562908	GALLEY	CURRENT LIMIT FOR LED
RS 30	23.1	1.5K	562908	GALLEY	CURRENT LIMIT FOR LED
RS 31	23.1	1.5K	562908	GALLEY	CURRENT LIMIT FOR LED
RS 32	13.3	1.5K	562908	DASH	CURRENT LIMIT FOR LED
RS 33	4.2	30	562948	RR JCT BOX	CURRENT LOAD FOR RELAY CONTACT
RS 33	23.1	1.5K	562908	GALLEY	CURRENT LIMIT FOR LED
RS 34	23.1	1.5K	562908	GALLEY	CURRENT LIMIT FOR LED
RS 35	23.1	1.5K	562908	GALLEY	CURRENT LIMIT FOR LED
RS 36	13.2	10	064907	EVAP. CPT.	CURRENT LIMIT FOR RELAY
RS 37	13.2	5	064907	EVAP. CPT.	CURRENT LIMIT FOR RELAY
RS 38	21.1	620	563205	FR. SERV. COMPT	ABS
RS 39	21.1	620	563205	FR. SERV. COMPT	TRAILER ABS
RS 40					
RS 41	17.1	1M	065830	LAVATORY TRAP SW.	FLUSH PUMP TIME DELAY

RESISTORS NUMBER CODE

No.	PAGE	OHM(S)	#PREV.	LOCATION	FUNCTION
RS 1	5	11 K	561898	FR JCT BOX	FAST IDLE DDEC CONTROL
RS 2	5	3.6 K	561897	FR JCT BOX	FAST IDLE DDEC CONTROL
RS 3	9.3	1 (2)	561537	FR JCT BOX	FOG LT - RH
RS 4	9.3	1 (2)	561537	FR JCT BOX	FOG LT - LH
RS 5	9.2	1 (2)	061976	FR JCT BOX	CORNERING LT - LH
RS 6	16.1	5	563006	RH UNDER DASH	VOLTAGE DIV. OPEN DOOR SOL.
RS 7	9.3	.82 (2)	060806	RR JCT BOX	PARKING BRAKE STOP LTS
RS 8	9.2	1 (2)	061976	FR JCT BOX	CORNERING LT - RH
RS 9	9.3	1 (2)	061976	RR JCT BOX	DOCKING LT - RH
RS 10	9.3	1 (2)	061976	RR JCT BOX	DOCKING LT - LH
RS 11	22	12	561191	FR TOP	DEFROSTER SPEED
RS 12	22	12	561191	FR TOP	DEFROSTER SPEED
RS 13	17	80 (2)	562108	FR TOP	FR DESTINATION SIGN
RS 14					
RS 15					
RS 16					
RS 17	7	220	562498	FR JCT BOX	FIRE ALARM
RS 18	8	75 K	064208	RR JCT BOX	FAN CLUTCH W/RETARDER
RS 19	13.2	330K	065755	EVAP. CPT.	TIME DELAY RELAY EVAP. FAN
RS 20	15	1 K	562470	RR JCT BOX	WORLD TR. SPEED TO DDEC III
RS 21	22	15K	562908	DASH	CURRENT LIMIT FOR LED
RS 24	9.1	1.5K	562908	DASH	CURRENT LIMIT FOR LED
RS 25	9.3	1.5K	562908	DASH	CURRENT LIMIT FOR LED
RS 26	10	1.5K	562908	DASH	CURRENT LIMIT FOR LED
RS 28	26.1	1.5K	562908	DASH	CURRENT LIMIT FOR LED
RS 29	23.1	1.5K	562908	GALLEY	CURRENT LIMIT FOR LED
RS 30	23.1	1.5K	562908	GALLEY	CURRENT LIMIT FOR LED
RS 31	23.1	1.5K	562908	GALLEY	CURRENT LIMIT FOR LED
RS 32	13.3	1.5K	562908	DASH	CURRENT LIMIT FOR LED
RS 33	4.2	30	562948	RR JCT BOX	CURRENT LOAD FOR RELAY CONTACT
RS 33	23.1	1.5K	562908	GALLEY	CURRENT LIMIT FOR LED
RS 34	23.1	1.5K	562908	GALLEY	CURRENT LIMIT FOR LED
RS 35	23.1	1.5K	562908	GALLEY	CURRENT LIMIT FOR LED
RS 36	13.2	10	064907	EVAP. CPT.	CURRENT LIMIT FOR RELAY
RS 37	13.2	5	064907	EVAP. CPT.	CURRENT LIMIT FOR RELAY
RS 38	21.1	620	563205	FR. SERV. COMPT	ABS
RS 39	21.1	620	563205	FR. SERV. COMPT	TRAILER ABS
RS 40					
RS 41	17.1	1M	065830	LAVATORY TRAP SW.	FLUSH PUMP TIME DELAY
RS 42	9.5	0.2	066001	FR JCT BOX	RH LOW BEAM (HALOGEN ONLY)
RS 43	9.5	0.2	066001	FR JCT BOX	LH LOW BEAM (HALOGEN ONLY)

RESISTORS NUMBER CODE

No.	PAGE	OHM(S)	#PREV.	LOCATION	FUNCTION
RS 1	5	11 K	561898	FR JCT BOX	FAST IDLE DDEC CONTROL
RS 2	5	3.6 K	561897	FR JCT BOX	FAST IDLE DDEC CONTROL
RS 3	9.3	1 (2)	561537	FR JCT BOX	FOG LT - RH
RS 4	9.3	1 (2)	561537	FR JCT BOX	FOG LT - LH
RS 5	9.2	1 (2)	061976	FR JCT BOX	CORNERING LT - LH
RS 6	16.1	5	563006	RH UNDER DASH	VOLTAGE DIV. OPEN DOOR SOL.
RS 7	9.3	.82 (2)	060806	RR JCT BOX	PARKING BRAKE STOP LTS
RS 8	9.2	1 (2)	061976	FR JCT BOX	CORNERING LT - RH
RS 9	9.3	1 (2)	061976	RR JCT BOX	DOCKING LT - RH
RS 10	9.3	1 (2)	061976	RR JCT BOX	DOCKING LT - LH
RS 11					
RS 12	22	6	563436	FR TOP	DEFROSTER SPEED
RS 13	17	80 (2)	562108	FR TOP	FR DESTINATION SIGN
RS 14					
RS 15					
RS 16					
RS 17	7	220	562498	FR JCT BOX	FIRE ALARM
RS 18	8	75 K	064208	RR JCT BOX	FAN CLUTCH W/RETARDER
RS 19	13.2	330K	065755	EVAP. CPT.	TIME DELAY RELAY EVAP. FAN
RS 20	15	1 K	562470	RR JCT BOX	WORLD TR. SPEED TO DDEC III
RS 21	22	15K	562908	DASH	CURRENT LIMIT FOR LED
RS 24	9.1	1.5K	562908	DASH	CURRENT LIMIT FOR LED
RS 25	9.3	1.5K	562908	DASH	CURRENT LIMIT FOR LED
RS 26	10	1.5K	562908	DASH	CURRENT LIMIT FOR LED
RS 28	26.1	1.5K	562908	DASH	CURRENT LIMIT FOR LED
RS 29	23.1	1.5K	562908	GALLEY	CURRENT LIMIT FOR LED
RS 30	23.1	1.5K	562908	GALLEY	CURRENT LIMIT FOR LED
RS 31	23.1	1.5K	562908	GALLEY	CURRENT LIMIT FOR LED
RS 32	13.3	1.5K	562908	DASH	CURRENT LIMIT FOR LED
RS 33	4.2	30	562948	RR JCT BOX	CURRENT LOAD FOR RELAY CONTACT
RS 33	23.1	1.5K	562908	GALLEY	CURRENT LIMIT FOR LED
RS 34	23.1	1.5K	562908	GALLEY	CURRENT LIMIT FOR LED
RS 35	23.1	1.5K	562908	GALLEY	CURRENT LIMIT FOR LED
RS 36	13.2	10	064907	EVAP. CPT.	CURRENT LIMIT FOR RELAY
RS 37	13.2	5	064907	EVAP. CPT.	CURRENT LIMIT FOR RELAY
RS 38	21.1	620	563205	FR. SERV. COMPT	ABS
RS 39	21.1	620	563205	FR. SERV. COMPT	TRAILER ABS
RS 40					
RS 41	17.1	1M	065830	LAVATORY TRAP SW.	FLUSH PUMP TIME DELAY
RS 42	9.5	0.2	066001	FR JCT BOX	RH LOW BEAM (HALOGEN ONLY)
RS 43	9.5	0.2	066001	FR JCT BOX	LH LOW BEAM (HALOGEN ONLY)

WIRING DIAGRAM KEYS

24-85B-16
- GAUGE
- CIRCUIT NUMBER
- CIRCUIT VOLTAGE

WIRE CROSSING

WIRE SOLDERING JOINT

SHIELDED WIRES

TWISTED WIRES

STUD TERMINAL

JUNCTION BLOCK

DUMMY

FS — FROM GROUND STUD GROUND SECTION

CHASSIS GROUND

ACCESSORY CHASSIS GROUND

C23 — CONNECTOR CODE NUMBER
5 — PIN TERMINAL, CAVITY NUMBER, SOCKET TERMINAL

L.E.D.

ILLUMINATING LAMP

FLUORESCENT LAMP

D3 — CODE NUMBER
ANODE — CATHODE — DIODE/RECTIFIER

RS2 — CODE NUMBER
4.3 KΩ — RESISTOR OHMS

CODE NUMBER — R2 — SUPPRESSOR DIODE
COIL <85 — 86> COIL
N.O. <87 — 30> COM.
N.C. <87A
RELAY S.P.D.T.
SINGLE POLE, DOUBLE THROW

CODE NUMBER — R2 — SUPPRESSOR DIODE
COIL <85 — 86> COIL
N.O. <87 — 30> COM.
RELAY S.P.S.T.
SINGLE POLE, SINGLE THROW

CODE NUMBER — R2
COIL <85 — 86> COIL
N.O. <87 — 30> COM.
N.C. <87A
RELAY S.P.D.T.
SINGLE POLE, DOUBLE THROW

CODE NUMBER → R2
COIL — COIL
COM. — N.O.
COM. — N.C.
BAT.
RELAY-MAGNETIC
D.P.D.T.
DOUBLE POLE, DOUBLE THROW

CODE NUMBER → R2
COIL — COIL
COM. — N.O.
BAT.
RELAY-MAGNETIC
S.P.S.T.
SINGLE POLE, SINGLE THROW

7.5 — AMPACITY FUSE

CB23 — CIRCUIT BREAKER CODE NUMBER
10A — AMPACITY

N.O. / N.C. / COM. — SWITCH S.P.D.T.
SINGLE POLE, DOUBLE THROW

PRESSURE SWITCH N.C.

PRESSURE SWITCH N.O.

SWITCH MOMENTARY CONTACT

SWITCH PUSH BUTTON

SWITCH MECHANICAL LOCK

M — ELECTRIC MOTOR

110V EXTERIOR PLUG RECEPTACLE

ELECTRIC HORN

THERMOSTAT

HEATER

SOLENOID VALVE

T — THERMISTOR

BATTERY

FR. JCT BOX - JUNCTION BLOCK

RR. JCT BOX - JUNCTION BLOCK

BLK	BLACK
YEL	YELLOW
RED	RED
WH	WHITE
GRY	GREY
ORA	ORANGE
BLU	BLUE
GRN	GREEN
BRN	BROWN
PUR	PURPLE
PK	PINK

FUSES CODE

No.	PAGE	AMP.	#PREV.	LOCATION	FUNCTION
F 1	6.1	10A	562407	RR. JCT. BOX	WORLD TRANSMISSION 12V BATTERY
F 2	6.1	10A	562407	RR. JCT. BOX	WORLD TRANS.& EATON TRANS.12V IGNITION
F 3	7.2	20A	562605	FR. JCT. BOX	ELECTRICAL HORNS
F 4	7.2	5A	562259	FR. JCT. BOX	FIRE ALARM
F 5					
F 6	5.1	5A	562602	FR. JCT. BOX	CRUISE DECEL SW.
F 7	8.1	5A	562602	FR. JCT. BOX	PARKING BRAKE PRESSURE SW.
F 8	9.2	10A	562407	FR. JCT. BOX	CORNERING LTS
F 9	9.3	15A	562604	RR. JCT. BOX	DOCKING LTS
F 10	9.3	15A	562604	FR. JCT. BOX	FOG LTS
F 11	11.1	5A	562259	FR. JCT. BOX	FRONT SERVICE CPT LTS
F 12	11.2	10A	562407	RR. JCT. BOX	AISLE LTS
F 13	11.2	7.5A	562602	RR. JCT. BOX	EMERGENCY EXIT LTS
F 14	11.3	15A	562602	FR. JCT. BOX	DRIVER'S LTS
F 15	11.3	15A	562604	RR. JCT. BOX	READING LTS RH
F 16	11.3	15A	562604	RR. JCT. BOX	READING LTS LH
F 17	11.3	10A	562407	RR. JCT. BOX	INDIRECT LIGHTING R.H.
F 18	11.4	10A	562407	RR. JCT. BOX	24V FLUORESCENT RH
F 19	11.4	10A	562407	RR. JCT. BOX	24V FLUORESCENT LH
F 20	11.3	5A	562599	FR. JCT. BOX	GENERAL & READING LTS. SW.
F 21	12.1	10A	560061	RR. JCT. BOX	PRIME PUMP
F 22	14.1	10A	562407	FR. JCT. BOX	POWER 12V OUTLET
F 23	14.1	15A	562604	FR. JCT. BOX	DRIVER'S WINDOW LIFTER
F 24	14.1	15A	562604	FR. JCT. BOX	CIGAR LIGHTER
F 25	14.1	3A	562599	FR. JCT. BOX	SUN VISOR
F 26	26.1	7.5A	562259	FR. JCT. BOX	WATER HTR WEBASTO TIMER
F 27	17.1	5A	562259	RR. JCT. BOX	GALLEY LAMP & LAVATORY NIGHT LTS.
F 28	17.1	10A	562407	RR. JCT. BOX	LAVATORY PUMP
F 29	17.1	7.5A	562602	RR. JCT. BOX	LAVATORY LTS
F 31	17.1	5A	562259	FR. JCT. BOX	FRONT DESTINATION SIGN ELECTRONIC
F 31	17.1	7.5A	562602	FR. JCT. BOX	FRONT DESTINATION SIGN ELECTRIC
F 32	11.3	5A	562259	FR. JCT. BOX	PASSENGER NO SMOKING LTS
F 33	18.1	5A	562259	FR. JCT. BOX	KNEELING SYSTEM
F 34	19.1	3A	562599	FR. JCT. BOX	LUGGAGE DOOR LOCK
F 39	22.1	20A	562605	FR. JCT. BOX	UPPER WINDSHIELD FAN AND PUMP DEFROST
F 40					
F 41					
F 42	20.5	3A			WIRELESS MIC CHARGER
F 43	1.2	3A	562599	FR. JCT. BOX	12V SIGNAL TO BATT MONITOR
F 44	1.2	3A	562599	FR. JCT. BOX	24V SIGNAL TO BATT MONITOR
F 46	24.1	7.5A	562602	FR. JCT. BOX	MIRROR ADJUST & HEATED 24V SPARTAN
F 47	24.3	7.5A	562407	FR. JCT. BOX	MIRROR ADJUST & HEATED 12V RAMCO
F 48	25.2	10A	562407	RR. JCT. BOX	WHEEL CHAIR LIFT POWER CONTROL
F 49	26.1	15A	562605	RR. JCT. BOX	PRE-HEAT WATER HEATER WEBASTO
F 50	26.1	20A	562605	RR. JCT. BOX	PRE-HEAT WATER HEATER WEBASTO
F 51	11.2	7.5A	562602	RR. JCT. BOX	HAR RACK CPT LTS
F 57	17.1	5A	562259	RR. JCT. BOX	LAVATORY FLUORESCENT
F 58	11.3	10A	562407	RR. JCT. BOX	INDIRECT LIGHTING L.H.
F 59					
F 60	17.1	10A	562407	RR. JCT. BOX	LAVATORY FAN
F 61	27.1	1A	560893	FR. JCT. BOX	INTERCOM
F 62	2.1	3A	562599	RR. JCT. BOX	PRO-LINK & FIRE ALARM
F 63	27.1	3A	560893	MON. CLARION	BACK-UP MONITOR CLARION
F 70	23.1	7.5A	562602	GALLEY PANEL	GALLEY RH CONTAINER
F 71	23.1	7.5A	562602	GALLEY PANEL	GALLEY LH CONTAINER
F 72	23.1	10A	562407	GALLEY PANEL	GALLEY REFRIGERATOR COMPRESSOR

No.	PAGE	AMP.	#PREV.	LOCATION	FUNCTION
F 73	23.1	35A	562608	GALLEY PANEL	GALLEY COFFEMAKER
F 74	23.1	7.5	560598	BAT. CPT.	GALLEY REFRIGERATOR
F 75					
F 76	20.8	1A	562597	SOUND SYS JC	DVD KARAOKE
F 77	20.8	3A	562599	SOUND SYS JC	DVD KARAOKE
F 81	6.3	10A	562407	RR. JCT. BOX	Z F TRANSM.
F 82	6.3	10A	562407	RR. JCT. BOX	ZF TRANSM.
F 83	6.3	10A	562407	RR. JCT. BOX	ZF TRANSM.
F ZF1	15.1	3A	560893	FR.JCT.BOX	STEERING CONTROL

FUSES CODE

No.	PAGE	AMP.	#PREV.	LOCATION	FUNCTION	No.	PAGE	AMP.	#PREV.	LOCATION	FUNCTION

FUSES CODE

No.	PAGE	AMP.	#PREV.	LOCATION	FUNCTION
F 1	6.1	10A	562407	RR. JCT. BOX	WORLD TRANSMISSION 12V BATTERY
F 2	6.1	10A	562407	RR. JCT. BOX	WORLD TRANS.& EATON TRANS.12V IGNITION
F 3	7.2	20A	562605	FR. JCT. BOX	ELECTRICAL HORNS
F 4	7.2	5A	562259	FR. JCT. BOX	FIRE ALARM
F 5					
F 6	5.1	5A	562602	FR. JCT. BOX	CRUISE DECEL SW.
F 7	8.1	5A	562602	FR. JCT. BOX	PARKING BRAKE PRESSURE SW.
F 8	9.2	10A	562407	FR. JCT. BOX	CORNERING LTS
F 9	9.3	15A	562604	RR. JCT. BOX	DOCKING LTS
F 10	9.3	15A	562604	FR. JCT. BOX	FOG LTS
F 11	11.1	5A	562259	FR. JCT. BOX	FRONT SERVICE CPT LTS
F 12	11.2	10A	562407	RR. JCT. BOX	AISLE LTS
F 13	11.2	7.5A	562602	RR. JCT. BOX	EMERGENCY EXIT LTS
F 14	11.3	15A	562602	FR. JCT. BOX	DRIVER'S LTS
F 15	11.3	15A	562604	RR. JCT. BOX	READING LTS RH
F 16	11.3	15A	562604	RR. JCT. BOX	READING LTS LH
F 17	11.3	10A	562407	RR. JCT. BOX	INDIRECT LIGHTING R.H.
F 18	11.4	10A	562407	RR. JCT. BOX	24V FLUORESCENT RH
F 19	11.4	10A	562407	RR. JCT. BOX	24V FLUORESCENT LH
F 20	11.3	5A	562599	FR. JCT. BOX	GENERAL & READING LTS. SW.
F 21	12.1	10A	560061	RR. JCT. BOX	PRIME PUMP
F 22	14.1	10A	562407	FR. JCT. BOX	POWER 12V OUTLET
F 23	14.1	15A	562604	FR. JCT. BOX	DRIVER'S WINDOW LIFTER
F 24	14.1	15A	562604	FR. JCT. BOX	CIGAR LIGHTER
F 25	14.1	3A	562599	FR. JCT. BOX	SUN VISOR
F 26	26.1	7.5A	562259	FR. JCT. BOX	WATER HTR WEBASTO TIMER
F 27	17.1	5A	562259	RR. JCT. BOX	GALLEY LAMP & LAVATORY NIGHT LTS.
F 28	17.1	10A	562407	RR. JCT. BOX	LAVATORY PUMP
F 29	17.1	7.5A	562602	RR. JCT. BOX	LAVATORY LTS
F 31	17.1	5A	562259	FR. JCT. BOX	FRONT DESTINATION SIGN ELECTRONIC
F 31	17.1	7.5A	562602	FR. JCT. BOX	FRONT DESTINATION SIGN ELECTRIC
F 32	11.3	5A	562259	FR. JCT. BOX	PASSENGER NO SMOKING LTS
F 33	18.1	5A	562259	FR. JCT. BOX	KNEELING SYSTEM
F 34	19.1	3A	562599	FR. JCT. BOX	LUGGAGE DOOR LOCK
F 39	22.1	20A	562605	FR. JCT. BOX	UPPER WINDSHIELD FAN AND PUMP DEFROST
F 40					
F 41					
F 42	20.5	3A			WIRELESS MIC CHARGER
F 43	1.2	3A	562599	FR. JCT. BOX	12V SIGNAL TO BATT MONITOR
F 44	1.2	3A	562599	FR. JCT. BOX	24V SIGNAL TO BATT MONITOR
F 46	24.1	7.5A	562602	FR. JCT. BOX	MIRROR ADJUST & HEATED 24V SPARTAN
F 47	24.3	7.5A	562407	FR. JCT. BOX	MIRROR ADJUST & HEATED 12V RAMCO
F 48	25.2	10A	562407	RR. JCT. BOX	WHEEL CHAIR LIFT POWER CONTROL
F 49	26.1	15A	562605	RR. JCT. BOX	PRE-HEAT WATER HEATER WEBASTO
F 50	26.1	20A	562605	RR. JCT. BOX	PRE-HEAT WATER HEATER WEBASTO
F 51	11.2	7.5A	562602	RR. JCT. BOX	HAR RACK CPT LTS
F 57	17.1	5A	562259	RR. JCT. BOX	LAVATORY FLUORESCENT
F 58	11.3	10A	562407	RR. JCT. BOX	INDIRECT LIGHTING L.H.
F 59					
F 60	17.1	10A	562407	RR. JCT. BOX	LAVATORY FAN
F 61	27.1	1A	560893	FR. JCT. BOX	INTERCOM
F 62	2.1	3A	562599	RR. JCT. BOX	PRO-LINK & FIRE ALARM
F 63	27.1	3A	560893	MON. CLARION	BACK-UP MONITOR CLARION
F 70	23.1	7.5A	562602	GALLEY PANEL	GALLEY RH CONTAINER
F 71	23.1	7.5A	562602	GALLEY PANEL	GALLEY LH CONTAINER
F 72	23.1	10A	562407	GALLEY PANEL	GALLEY REFRIGERATOR COMPRESSOR

No.	PAGE	AMP.	#PREV.	LOCATION	FUNCTION
F 73	23.1	35A	562608	GALLEY PANEL	GALLEY COFFEMAKER
F 74	23.1	7.5	560598	BAT. CPT.	GALLEY REFRIGERATOR
F 75					
F 76	20.8	1A	562597	SOUND SYS JC	DVD KARAOKE
F 77	20.8	3A	562599	SOUND SYS JC	DVD KARAOKE
F 81	6.3	10A	562407	RR. JCT. BOX	Z F TRANSM.
F 82	6.3	10A	562407	RR. JCT. BOX	ZF TRANSM.
F 83	6.3	10A	562407	RR. JCT. BOX	ZF TRANSM.
F 84	6.3	10A	562407	RR. JCT. BOX	ZF TRANSM.
F ZF1	15.1	3A	560893	FR.JCT.BOX	STEERING CONTROL

FUSES CODE

No.	PAGE	AMP.	#PREV.	LOCATION	FUNCTION	No.	PAGE	AMP.	#PREV.	LOCATION	FUNCTION

FUSES CODE

No.	PAGE	AMP.	#PREV.	LOCATION	FUNCTION
F 1	6.1	10A	562407	RR. JCT. BOX	WORLD TRANSMISSION 12V BATTERY
F 2	6.1	10A	562407	RR. JCT. BOX	WORLD TRANS.& EATON TRANS.12V IGNITION
F 3	7.2	20A	562605	FR. JCT. BOX	ELECTRICAL HORNS
F 4	7.2	5A	562259	FR. JCT. BOX	FIRE ALARM
F 5					
F 6	5.1	5A	562602	FR. JCT. BOX	CRUISE DECEL SW.
F 7	8.1	5A	562602	FR. JCT. BOX	PARKING BRAKE PRESSURE SW.
F 8	9.2	10A	562407	FR. JCT. BOX	CORNERING LTS
F 9	9.3	15A	562604	RR. JCT. BOX	DOCKING LTS
F 10	9.3	15A	562604	FR. JCT. BOX	FOG LTS
F 11	11.1	5A	562259	FR. JCT. BOX	FRONT SERVICE CPT LTS
F 12	11.2	10A	562407	RR. JCT. BOX	AISLE LTS
F 13	11.2	7.5A	562602	RR. JCT. BOX	EMERGENCY EXIT LTS
F 14	11.3	15A	562602	FR. JCT. BOX	DRIVER'S LTS
F 15	11.3	15A	562604	RR. JCT. BOX	READING LTS RH
F 16	11.3	15A	562604	RR. JCT. BOX	READING LTS LH
F 17	11.3	10A	562407	RR. JCT. BOX	INDIRECT LIGHTING R.H.
F 18	11.4	10A	562407	RR. JCT. BOX	24V FLUORESCENT RH
F 19	11.4	10A	562407	RR. JCT. BOX	24V FLUORESCENT LH
F 20	11.3	5A	562599	FR. JCT. BOX	GENERAL & READING LTS. SW.
F 21	12.1	10A	560061	RR. JCT. BOX	PRIME PUMP
F 22	14.1	10A	562407	FR. JCT. BOX	POWER 12V OUTLET
F 23	14.1	15A	562604	FR. JCT. BOX	DRIVER'S WINDOW LIFTER
F 24	14.1	15A	562604	FR. JCT. BOX	CIGAR LIGHTER
F 25	14.1	3A	562599	FR. JCT. BOX	SUN VISOR
F 26	26.1	7.5A	562259	FR. JCT. BOX	WATER HTR WEBASTO TIMER
F 27	17.1	5A	562259	RR. JCT. BOX	GALLEY LAMP & LAVATORY NIGHT LTS.
F 28	17.1	10A	562407	RR. JCT. BOX	LAVATORY PUMP
F 29	17.1	7.5A	562602	RR. JCT. BOX	LAVATORY LTS
F 31	17.1	5A	562259	FR. JCT. BOX	FRONT DESTINATION SIGN ELECTRONIC
F 31	17.1	7.5A	562602	FR. JCT. BOX	FRONT DESTINATION SIGN ELECTRIC
F 32	11.3	5A	562259	FR. JCT. BOX	PASSENGER NO SMOKING LTS
F 33	18.1	5A	562259	FR. JCT. BOX	KNEELING SYSTEM
F 34	19.1	3A	562599	FR. JCT. BOX	LUGGAGE DOOR LOCK
F 39	22.1	20A	562605	FR. JCT. BOX	UPPER WINDSHIELD FAN AND PUMP DEFROST
F 40					
F 41					
F 42	20.5	3A			WIRELESS MIC CHARGER
F 43	1.2	3A	562599	FR. JCT. BOX	12V SIGNAL TO BATT MONITOR
F 44	1.2	3A	562599	FR. JCT. BOX	24V SIGNAL TO BATT MONITOR
F 46	24.1	7.5A	562602	FR. JCT. BOX	MIRROR ADJUST & HEATED 24V SPARTAN
F 47	24.3	7.5A	562407	FR. JCT. BOX	MIRROR ADJUST & HEATED 12V RAMCO
F 48	25.2	10A	562407	RR. JCT. BOX	WHEEL CHAIR LIFT POWER CONTROL
F 49	26.1	15A	562605	RR. JCT. BOX	PRE-HEAT WATER HEATER WEBASTO
F 50	26.1	20A	562605	RR. JCT. BOX	PRE-HEAT WATER HEATER WEBASTO
F 51	11.2	7.5A	562602	RR. JCT. BOX	HAT RACK CPT LTS
F 57	17.1	5A	562259	RR. JCT. BOX	LAVATORY FLUORESCENT
F 58	11.3	10A	562407	RR. JCT. BOX	INDIRECT LIGHTING L.H.
F 59					
F 60	17.1	10A	562407	RR. JCT. BOX	LAVATORY FAN
F 61	27.1	1A	560893	FR. JCT. BOX	INTERCOM
F 62	2.1	3A	562599	RR. JCT. BOX	PRO-LINK & FIRE ALARM
F 63	27.1	3A	560893	MON. CLARION	BACK-UP MONITOR CLARION
F 70	23.1	7.5A	562602	GALLEY PANEL	GALLEY RH CONTAINER
F 71	23.1	7.5A	562602	GALLEY PANEL	GALLEY LH CONTAINER
F 72	23.1	10A	562407	GALLEY PANEL	GALLEY REFRIGERATOR COMPRESSOR
F 73	23.1	35A	562608	GALLEY PANEL	GALLEY COFFEMAKER
F 74	23.1	7.5	560598	BAT. CPT.	GALLEY REFRIGERATOR
F 75					
F 76	20.8	1A	562597	SOUND SYS JC	DVD KARAOKE
F 77	20.8	3A	562599	SOUND SYS JC	DVD KARAOKE
F 81	6.3	10A	562407	RR. JCT. BOX	Z F TRANSM.
F 82	6.3	10A	562407	RR. JCT. BOX	ZF TRANSM.
F 83	6.3	10A	562407	RR. JCT. BOX	ZF TRANSM.
F 84	6.3	10A	562407	RR. JCT. BOX	ZF TRANSM.
F ZF1	15.1	3A	560893	FR.JCT.BOX	STEERING CONTROL

FUSES CODE

No.	PAGE	AMP.	#PREV.	LOCATION	FUNCTION	No.	PAGE	AMP.	#PREV.	LOCATION	FUNCTION

FUSES CODE

No.	PAGE	AMP.	#PREV.	LOCATION	FUNCTION
F 1	6.1	10A	562407	RR. JCT. BOX	WORLD TRANSMISSION 12V BATTERY
F 2	6.1	10A	562407	RR. JCT. BOX	WORLD TRANS.& EATON TRANS.12V IGNITION
F 3	7.2	20A	562605	FR. JCT. BOX	ELECTRICAL HORNS
F 4	7.2	5A	562259	FR. JCT. BOX	FIRE ALARM
F 5					
F 6	5.1	5A	562602	FR. JCT. BOX	CRUISE DECEL SW.
F 7	8.1	5A	562602	FR. JCT. BOX	PARKING BRAKE PRESSURE SW.
F 7S	4.2	3A	560893	STARTER	STARTER « ON » TTLT
F 8	9.2	10A	562407	FR. JCT. BOX	CORNERING LTS
F 9	9.3	15A	562604	RR. JCT. BOX	DOCKING LTS
F 10	9.3	15A	562604	FR. JCT. BOX	FOG LTS
F 11	11.1	5A	562259	FR. JCT. BOX	FRONT SERVICE CPT LTS
F 12	11.2	10A	562407	RR. JCT. BOX	AISLE LTS
F 13	11.2	7.5A	562602	RR. JCT. BOX	EMERGENCY EXIT LTS
F 14	11.3	15A	562602	FR. JCT. BOX	DRIVER'S LTS
F 15	11.3	15A	562604	RR. JCT. BOX	READING LTS RH
F 16	11.3	15A	562604	RR. JCT. BOX	READING LTS LH
F 17	11.3	10A	562407	RR. JCT. BOX	INDIRECT LIGHTING R.H.
F 18	11.4	10A	562407	RR. JCT. BOX	24V FLUORESCENT RH
F 19	11.4	10A	562407	RR. JCT. BOX	24V FLUORESCENT LH
F 20	11.3	5A	562599	FR. JCT. BOX	GENERAL & READING LTS. SW.
F 21	12.1	10A	560061	RR. JCT. BOX	PRIME PUMP
F 22	14.1	10A	562407	FR. JCT. BOX	POWER 12V OUTLET
F 23	14.1	15A	562604	FR. JCT. BOX	DRIVER'S WINDOW LIFTER
F 24	14.1	15A	562604	FR. JCT. BOX	CIGAR LIGHTER
F 25	14.1	3A	562599	FR. JCT. BOX	SUN VISOR
F 26	26.1	7.5A	562259	FR. JCT. BOX	WATER HTR WEBASTO TIMER
F 27	17.1	5A	562259	RR. JCT. BOX	GALLEY LAMP & LAVATORY NIGHT LTS.
F 28	17.1	10A	562407	RR. JCT. BOX	LAVATORY PUMP
F 29	17.1	7.5A	562602	RR. JCT. BOX	LAVATORY LTS
F 31	17.1	5A	562259	FR. JCT. BOX	FRONT DESTINATION SIGN ELECTRONIC
F 31	17.1	7.5A	562602	FR. JCT. BOX	FRONT DESTINATION SIGN ELECTRIC
F 32	11.3	5A	562259	FR. JCT. BOX	PASSENGER NO SMOKING LTS
F 33	18.1	5A	562259	FR. JCT. BOX	KNEELING SYSTEM
F 34	19.1	3A	562599	FR. JCT. BOX	LUGGAGE DOOR LOCK
F 39	22.1	20A	562605	FR. JCT. BOX	UPPER WINDSHIELD FAN AND PUMP DEFROST
F 40					
F 41					
F 42	20.5	3A	562599	FR. JCT. BOX	WIRELESS MIC CHARGER
F 43	1.2	3A	562599	FR. JCT. BOX	12V SIGNAL TO BATT MONITOR
F 44	1.2	3A	562599	FR. JCT. BOX	24V SIGNAL TO BATT MONITOR
F 46					
F 47	24.2,24.3	7.5A	562407	FR. JCT. BOX	MIRROR ADJUST & HEATED 12V RAMCO
F 48	25.2	10A	562407	RR. JCT. BOX	WHEEL CHAIR LIFT POWER CONTROL
F 49	26.1	15A	562605	RR. JCT. BOX	PRE-HEAT WATER HEATER WEBASTO
F 50	26.1	20A	562605	RR. JCT. BOX	PRE-HEAT WATER HEATER WEBASTO
F 51	11.2	7.5A	562602	RR. JCT. BOX	HAT RACK CPT LTS
F 57	17.1	5A	562259	RR. JCT. BOX	LAVATORY FLUORESCENT
F 58	11.3	10A	562407	RR. JCT. BOX	INDIRECT LIGHTING L.H.
F 59					
F 60	17.1	10A	562407	RR. JCT. BOX	LAVATORY FAN
F 61	27.1	1A	560893	FR. JCT. BOX	INTERCOM
F 62	2.1	3A	562599	RR. JCT. BOX	PRO-LINK & FIRE ALARM
F 63	27.1	3A	560893	MON. CLARION	BACK-UP MONITOR CLARION
F 70	23.1	7.5A	562602	GALLEY PANEL	GALLEY RH CONTAINER
F 71	23.1	7.5A	562602	GALLEY PANEL	GALLEY LH CONTAINER
F 72	23.1	10A	562407	GALLEY PANEL	GALLEY REFRIGERATOR COMPRESSOR

No.	PAGE	AMP.	#PREV.	LOCATION	FUNCTION
F 73	23.1	35A	562608	GALLEY PANEL	GALLEY COFFEMAKER
F 74	23.1	7.5	560598	BAT. CPT.	GALLEY REFRIGERATOR
F 75					
F 76	20.8	1A	562597	SOUND SYS JC	DVD KARAOKE
F 77	20.8	3A	562599	SOUND SYS JC	DVD KARAOKE
F 81	6.3	10A	562407	RR. JCT. BOX	Z F TRANSM.
F 82	6.3	10A	562407	RR. JCT. BOX	ZF TRANSM.
F 83	6.3	10A	562407	RR. JCT. BOX	ZF TRANSM.
F 84	6.3	10A	562407	RR. JCT. BOX	ZF TRANSM.
F ZF1	15.1	3A	560893	FR.JCT.BOX	STEERING CONTROL

FUSES CODE

No.	PAGE	AMP.	#PREV.	LOCATION	FUNCTION	No.	PAGE	AMP.	#PREV.	LOCATION	FUNCTION

FUSES CODE

No.	PAGE	AMP.	#PREV.	LOCATION	FUNCTION
F 1	6.1	10A	562407	RR. JCT. BOX	WORLD TRANSMISSION 12V BATTERY
F 2	6.1	10A	562407	RR. JCT. BOX	WORLD TRANS.& EATON TRANS.12V IGNITION
F 3	7.2	20A	562605	FR. JCT. BOX	ELECTRICAL HORNS
F 4	7.2	5A	562259	FR. JCT. BOX	FIRE ALARM
F 5					
F 6	5.1	5A	562602	FR. JCT. BOX	CRUISE DECEL SW.
F 7	8.1	5A	562602	FR. JCT. BOX	PARKING BRAKE PRESSURE SW.
F 7S	4.2	3A	560893	STARTER	STARTER « ON » TTLT
F 8	9.2	10A	562407	FR. JCT. BOX	CORNERING LTS
F 9	9.3	15A	562604	RR. JCT. BOX	DOCKING LTS
F 10	9.3	15A	562604	FR. JCT. BOX	FOG LTS
F 11	11.1	5A	562259	FR. JCT. BOX	FRONT SERVICE CPT LTS
F 12	11.2	10A	562407	RR. JCT. BOX	AISLE LTS
F 13	11.2	7.5A	562602	RR. JCT. BOX	EMERGENCY EXIT LTS
F 14	11.3	15A	562602	FR. JCT. BOX	DRIVER'S LTS
F 15	11.3	15A	562604	RR. JCT. BOX	READING LTS RH
F 16	11.3	15A	562604	RR. JCT. BOX	READING LTS LH
F 17	11.3	10A	562407	RR. JCT. BOX	INDIRECT LIGHTING R.H.
F 18	11.4	10A	562407	RR. JCT. BOX	24V FLUORESCENT RH
F 19	11.4	10A	562407	RR. JCT. BOX	24V FLUORESCENT LH
F 20	11.3	5A	562599	FR. JCT. BOX	GENERAL & READING LTS. SW.
F 21	12.1	10A	560061	RR. JCT. BOX	PRIME PUMP
F 22	14.1	10A	562407	FR. JCT. BOX	POWER 12V OUTLET
F 23	14.1	15A	562604	FR. JCT. BOX	DRIVER'S WINDOW LIFTER
F 24	14.1	15A	562604	FR. JCT. BOX	CIGAR LIGHTER
F 25	14.1	3A	562599	FR. JCT. BOX	SUN VISOR
F 26	26.1	7.5A	562259	FR. JCT. BOX	WATER HTR WEBASTO TIMER
F 27	17.1	5A	562259	RR. JCT. BOX	GALLEY LAMP & LAVATORY NIGHT LTS.
F 28	17.1	10A	562407	RR. JCT. BOX	LAVATORY PUMP
F 29	17.1	7.5A	562602	RR. JCT. BOX	LAVATORY LTS
F 31	17.1	5A	562259	FR. JCT. BOX	FRONT DESTINATION SIGN ELECTRONIC
F 31	17.1	7.5A	562602	FR. JCT. BOX	FRONT DESTINATION SIGN ELECTRIC
F 32	11.3	5A	562259	FR. JCT. BOX	PASSENGER NO SMOKING LTS
F 33	18.1	5A	562259	FR. JCT. BOX	KNEELING SYSTEM
F 34	19.1	3A	562599	FR. JCT. BOX	LUGGAGE DOOR LOCK
F 39	22.1	20A	562605	FR. JCT. BOX	UPPER WINDSHIELD FAN AND PUMP DEFROST
F 40					
F 41					
F 42	20.5	3A	562599	FR. JCT. BOX	WIRELESS MIC CHARGER
F 43	1.2	3A	562599	FR. JCT. BOX	12V SIGNAL TO BATT MONITOR
F 44	1.2	3A	562599	FR. JCT. BOX	24V SIGNAL TO BATT MONITOR
F 46					
F 47	24.2,24.3	7.5A	562407	FR. JCT. BOX	MIRROR ADJUST & HEATED 12V RAMCO
F 48	25.2	10A	562407	RR. JCT. BOX	WHEEL CHAIR LIFT POWER CONTROL
F 49	26.1	15A	562605	RR. JCT. BOX	PRE-HEAT WATER HEATER WEBASTO
F 50	26.1	20A	562605	RR. JCT. BOX	PRE-HEAT WATER HEATER WEBASTO
F 51	11.2	7.5A	562602	RR. JCT. BOX	HAT RACK CPT LTS
F 57	17.1	5A	562259	RR. JCT. BOX	LAVATORY FLUORESCENT
F 58	11.3	10A	562407	RR. JCT. BOX	INDIRECT LIGHTING L.H.
F 59					
F 60	17.1	10A	562407	RR. JCT. BOX	LAVATORY FAN
F 61	27.1	1A	560893	FR. JCT. BOX	INTERCOM
F 62	2.1	3A	562599	RR. JCT. BOX	PRO-LINK & FIRE ALARM
F 63	27.1	3A	560893	MON. CLARION	BACK-UP MONITOR CLARION
F 70	23.1	7.5A	562602	GALLEY PANEL	GALLEY RH CONTAINER
F 71	23.1	7.5A	562602	GALLEY PANEL	GALLEY LH CONTAINER

No.	PAGE	AMP.	#PREV.	LOCATION	FUNCTION
F 72	23.1	10A	562407	GALLEY PANEL	GALLEY REFRIGERATOR COMPRESSOR
F 73	23.1	35A	562608	GALLEY PANEL	GALLEY COFFEMAKER
F 74	23.1	7.5	560598	BAT. CPT.	GALLEY REFRIGERATOR
F 75					
F 76	20.8	3A	562599	SOUND SYS JC	DVD KARAOKE
F 77					
F 81	6.3	10A	562407	RR. JCT. BOX	Z F TRANSM.
F 82	6.3	10A	562407	RR. JCT. BOX	ZF TRANSM.
F 83	6.3	10A	562407	RR. JCT. BOX	ZF TRANSM.
F 84	6.3	10A	562407	RR. JCT. BOX	ZF TRANSM.
F ZF1	15.1	3A	560893	FR.JCT.BOX	STEERING CONTROL

FUSES CODE

No.	PAGE	AMP.	#PREV.	LOCATION	FUNCTION	No.	PAGE	AMP.	#PREV.	LOCATION	FUNCTION

LOGIC GATE

TRUTH TABLE

AND GATE

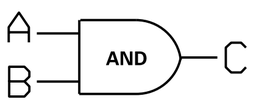

INPUT		OUT
A	B	C
Ø	Ø	Ø
Ø	1	Ø
1	Ø	Ø
1	1	1

*OUTPUT IS 1 WHEN ALL INPUT IS 1

NAND GATE

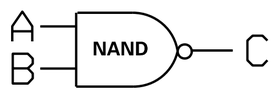

INPUT		OUT
A	B	C
Ø	Ø	1
Ø	1	1
1	Ø	1
1	1	Ø

* OUTPUT IS Ø WHEN ALL INPUT IS 1

OR GATE

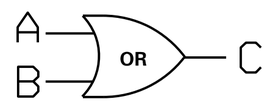

INPUT		OUT
A	B	C
Ø	Ø	Ø
Ø	1	1
1	Ø	1
1	1	1

* OUTPUT IS 1 WHEN EITHER INPUT IS 1

NOR GATE

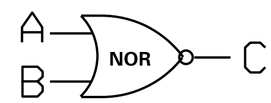

INPUT		OUT
A	B	C
Ø	Ø	1
Ø	1	Ø
1	Ø	Ø
1	1	Ø

* OUTPUT IS 1 WHEN NONE INPUT IS 1

NOT GATE

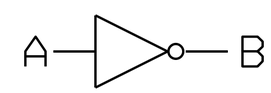

INPUT	OUT
A	B
Ø	1
1	Ø

* OUTPUT IS REVERSE OF INPUT

ON-DELAY

XX SECOND
AFTER A=1
THAN B=1

OFF-DELAY

XX SECOND
AFTER A=Ø
THAN B=Ø

INPUT OR OUTPUT LEVEL

LEVEL 1 = 12 VOLTS OR 24 VOLTS

LEVEL Ø = Ø VOLT (TO GROUND)

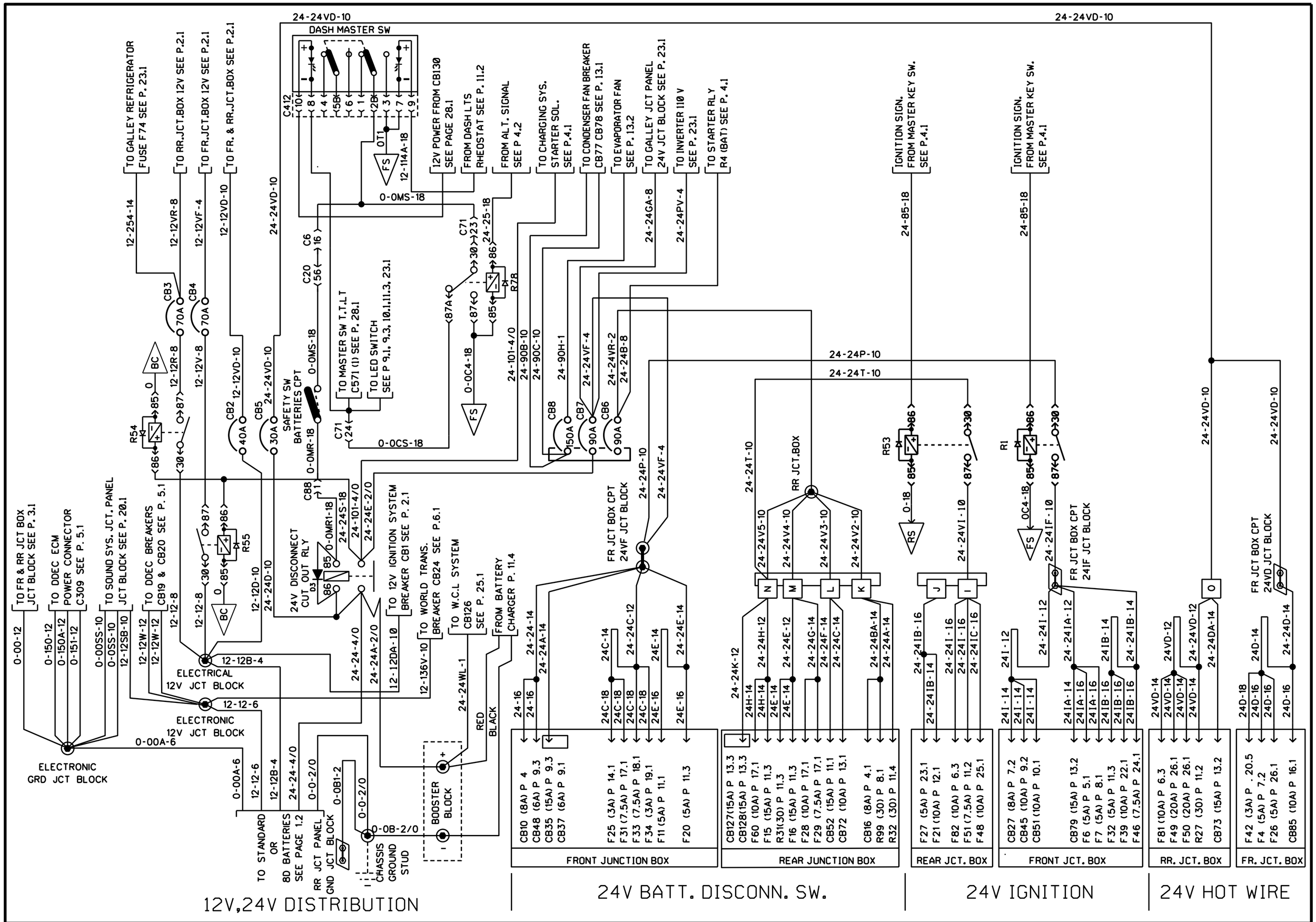

PREVOST	WIRING DIAGRAM	NO: D060976	PAGE: 1.1	REVISION 00

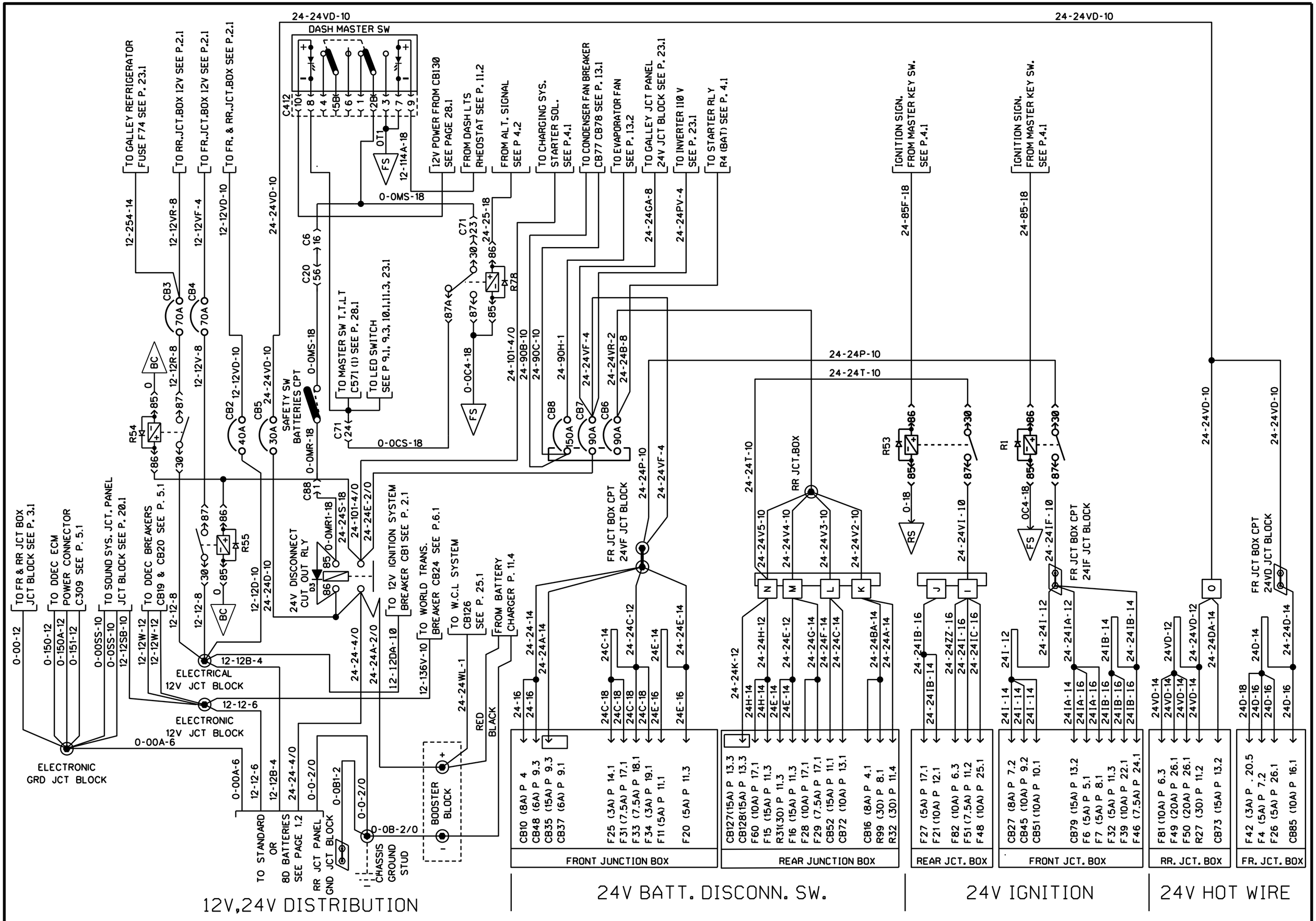

PREVOST	WIRING DIAGRAM	NO: D060976	PAGE: 1.1	REVISION 02

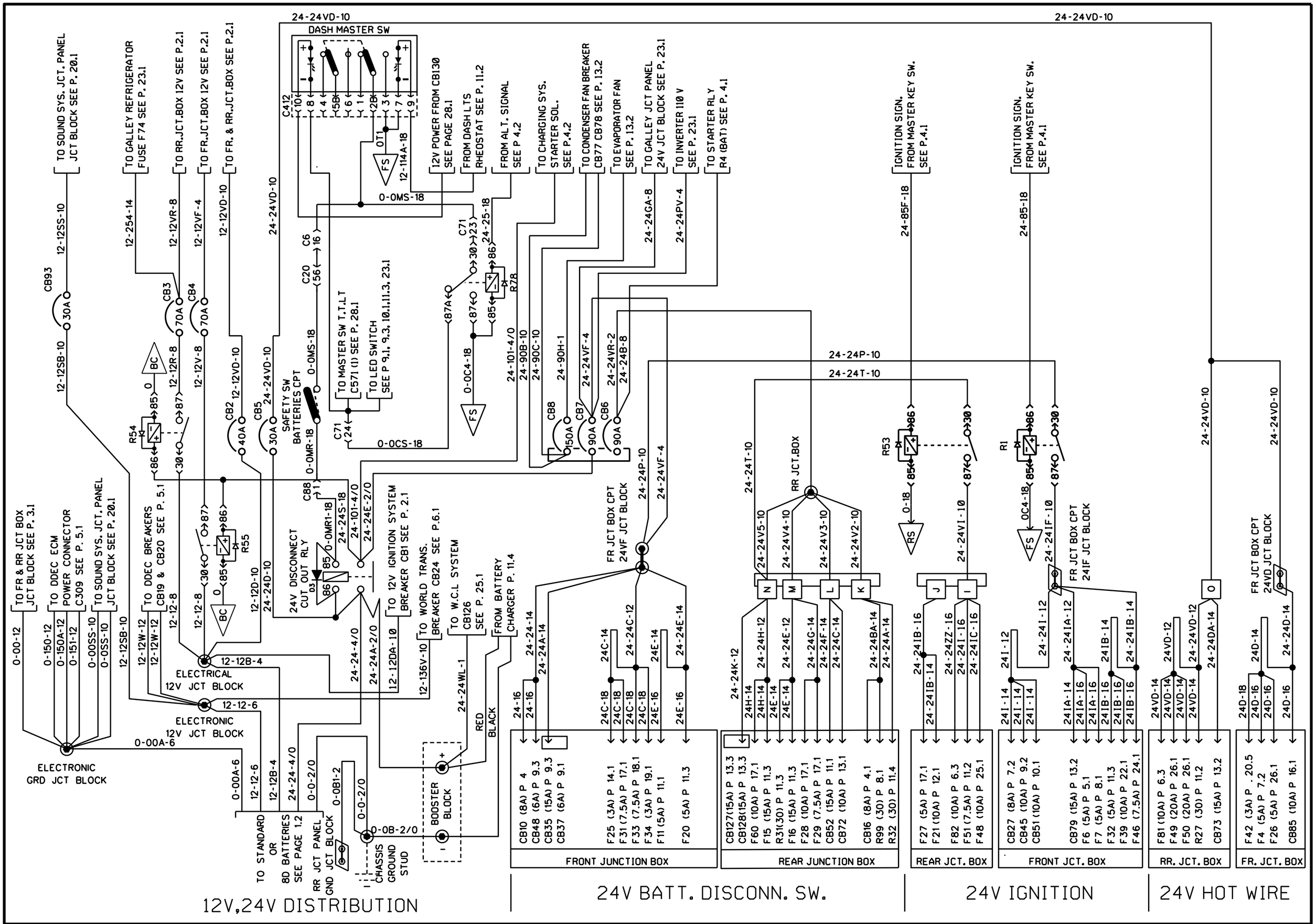

PREVOST	WIRING DIAGRAM	NO: D060976	PAGE: 1.1	REVISION 07

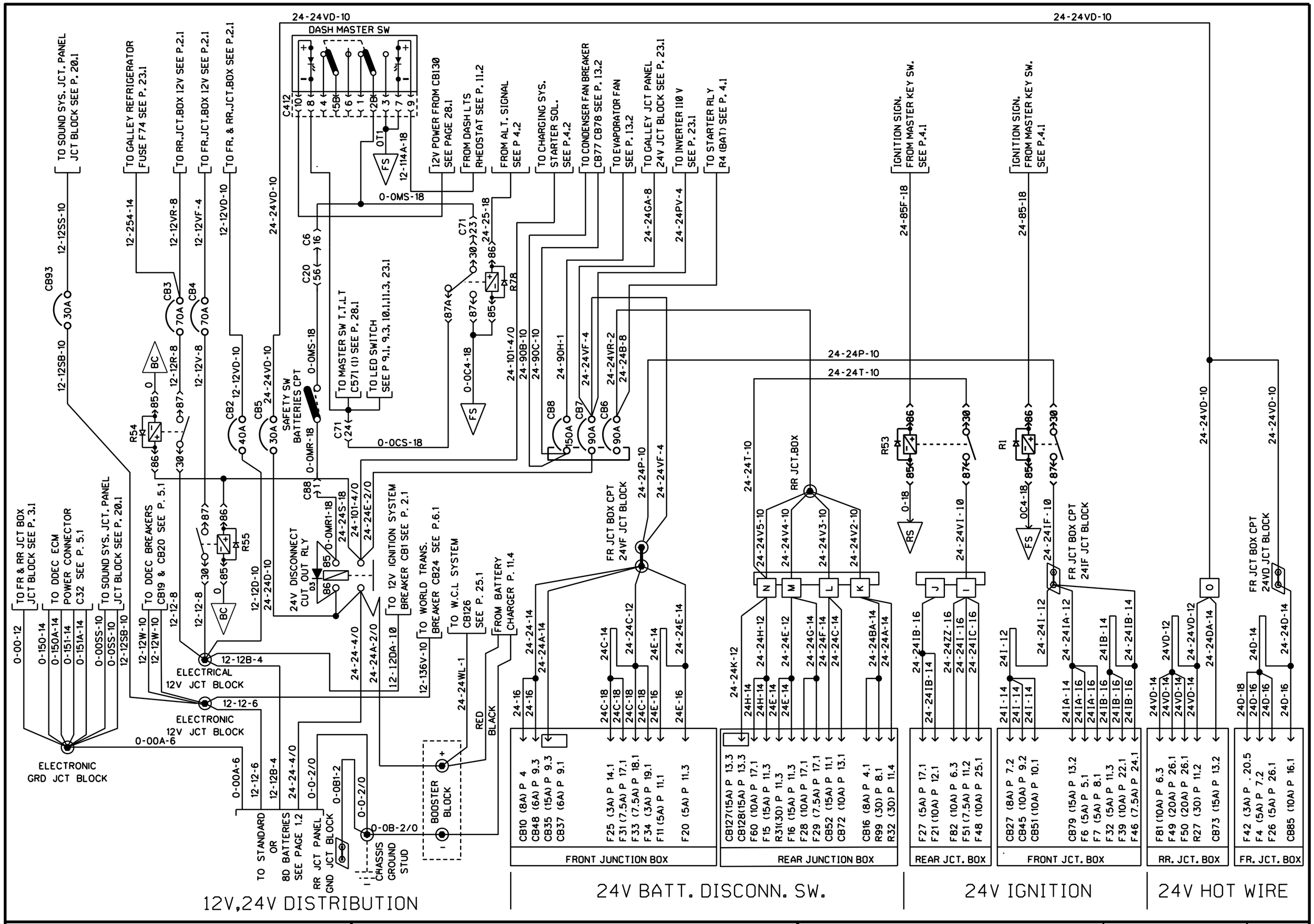

PREVOST | WIRING DIAGRAM | NO: D060976 | PAGE: 1.1 | REVISION 08

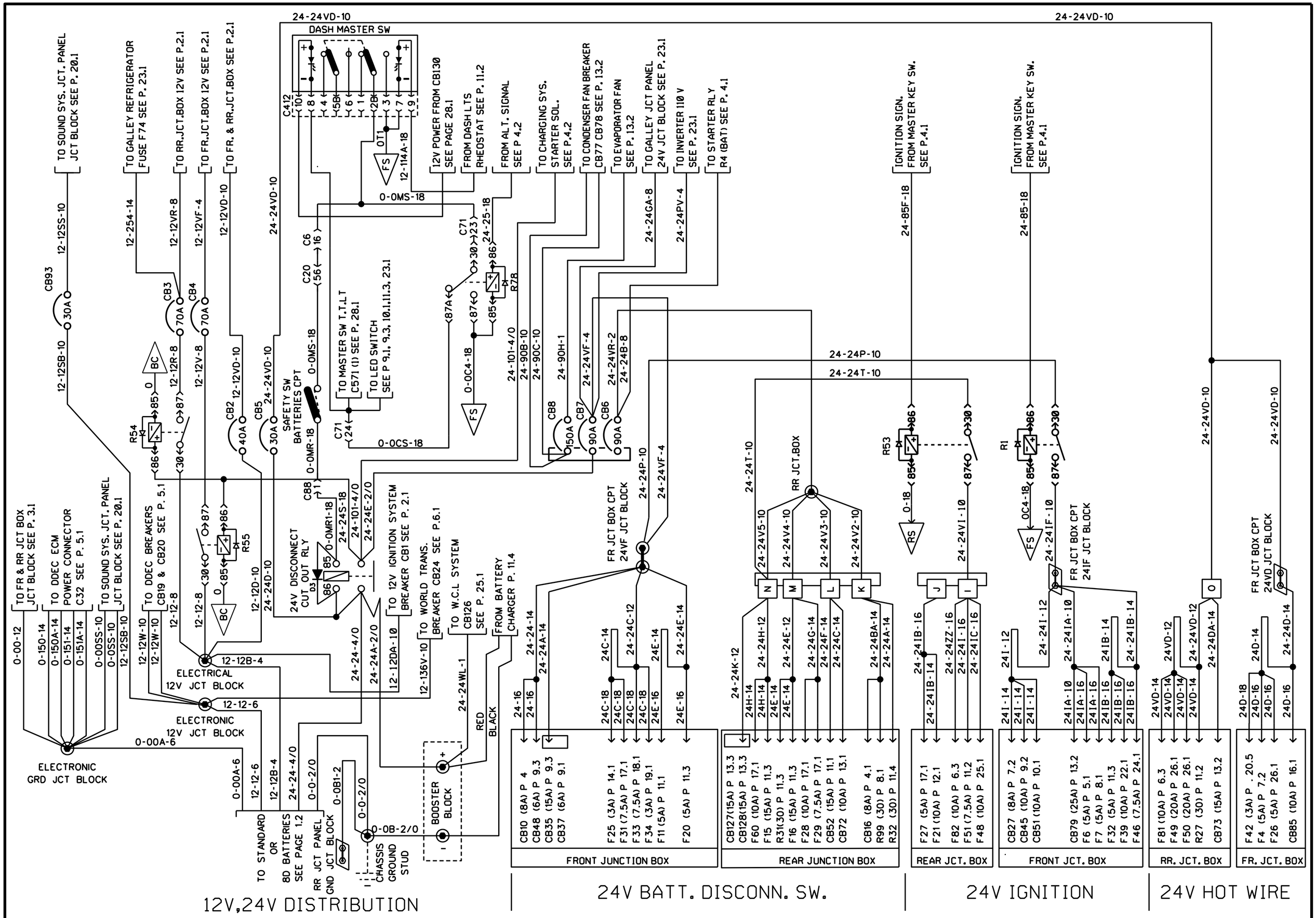

PREVOST | WIRING DIAGRAM | NO: D060976 | PAGE: 1.1 | REVISION 12

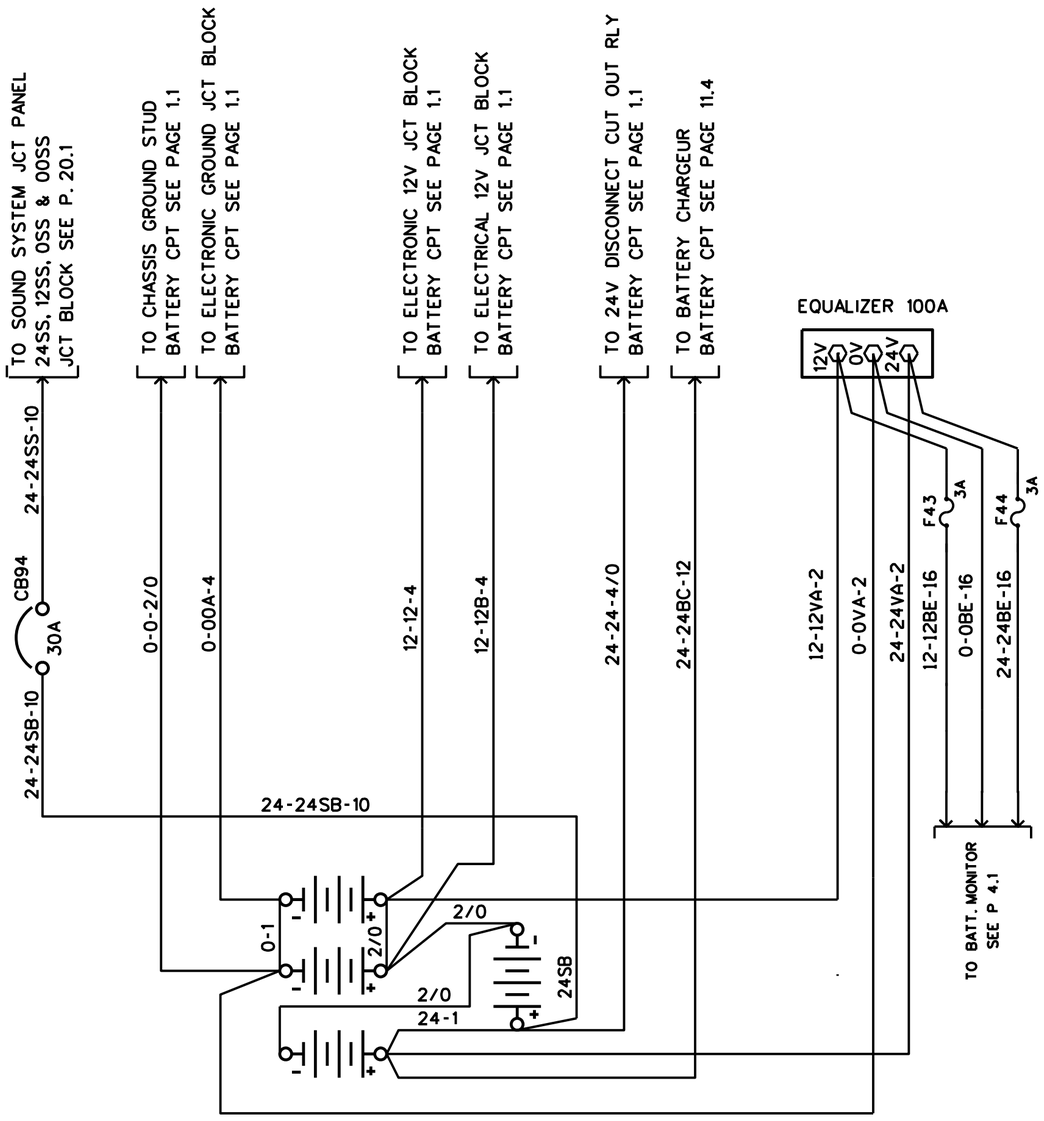

STANDARD BATTERIES

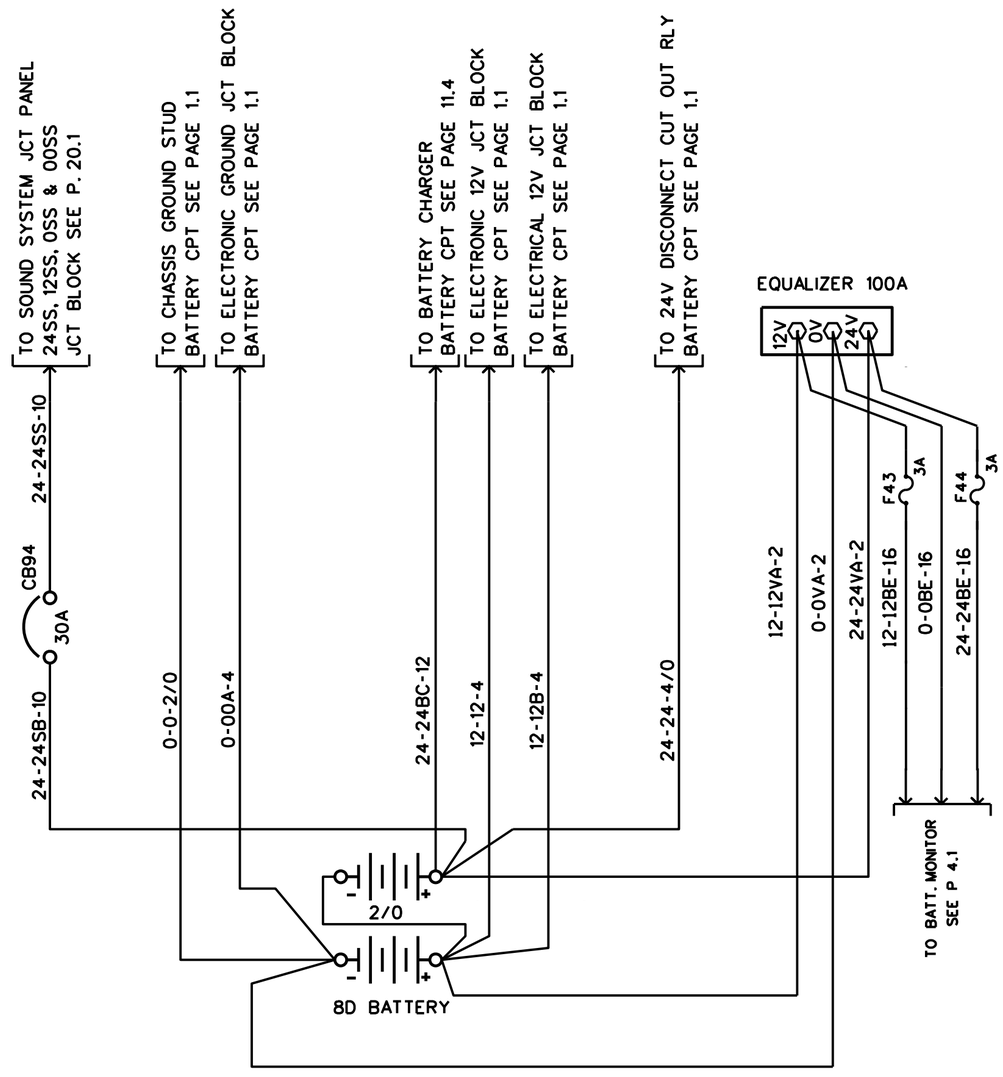

8D BATTERIES

PREVOST	WIRING DIAGRAM	NO: D060976	PAGE: 1.2	REVISION 00

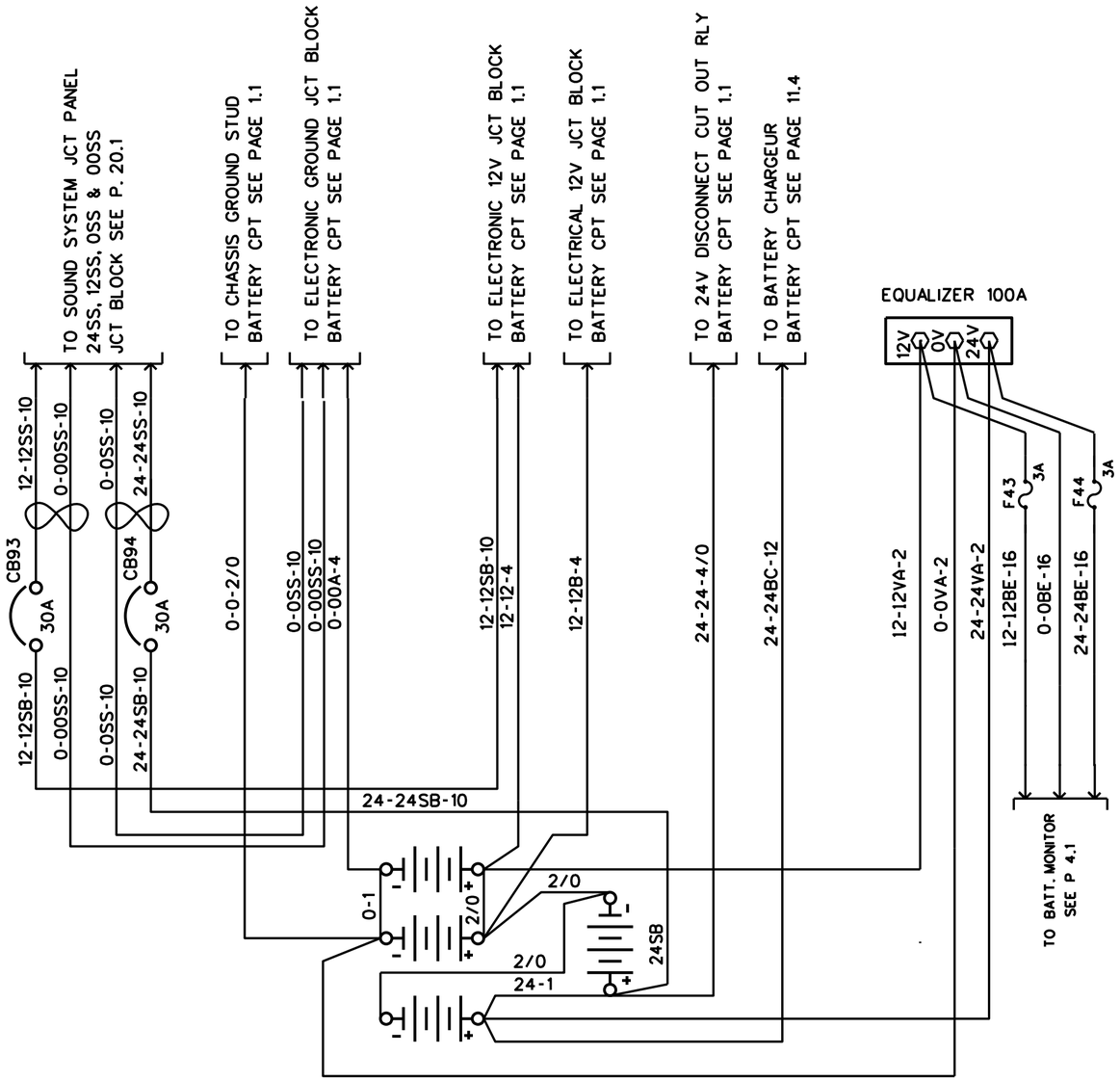

STANDARD BATTERIES

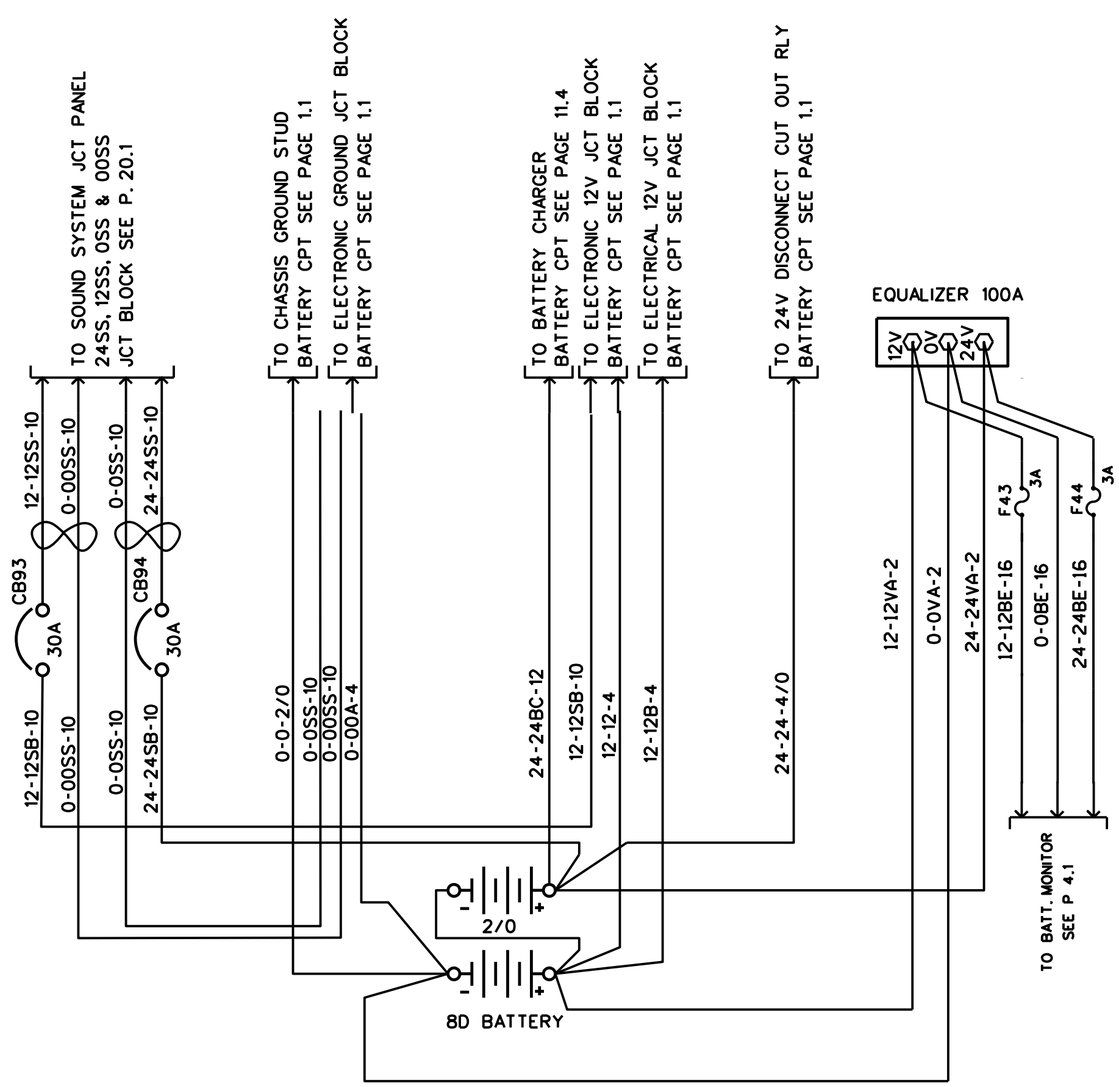

8D BATTERIES

PREVOST	WIRING DIAGRAM	NO: D060976	PAGE: 1.2	REVISION 08

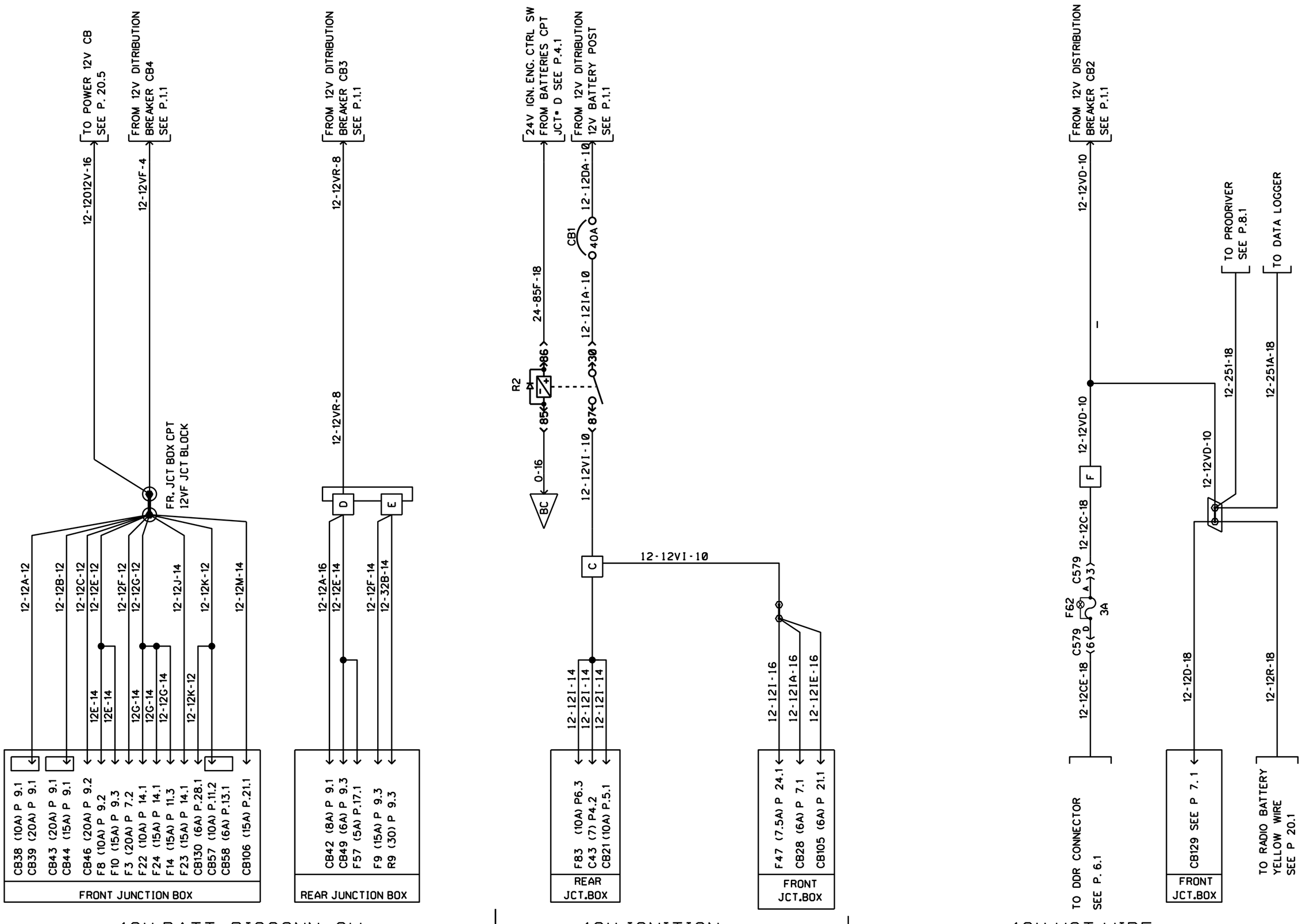

PREVOST	WIRING DIAGRAM	NO: D060976	PAGE: 2.1	REVISION 00

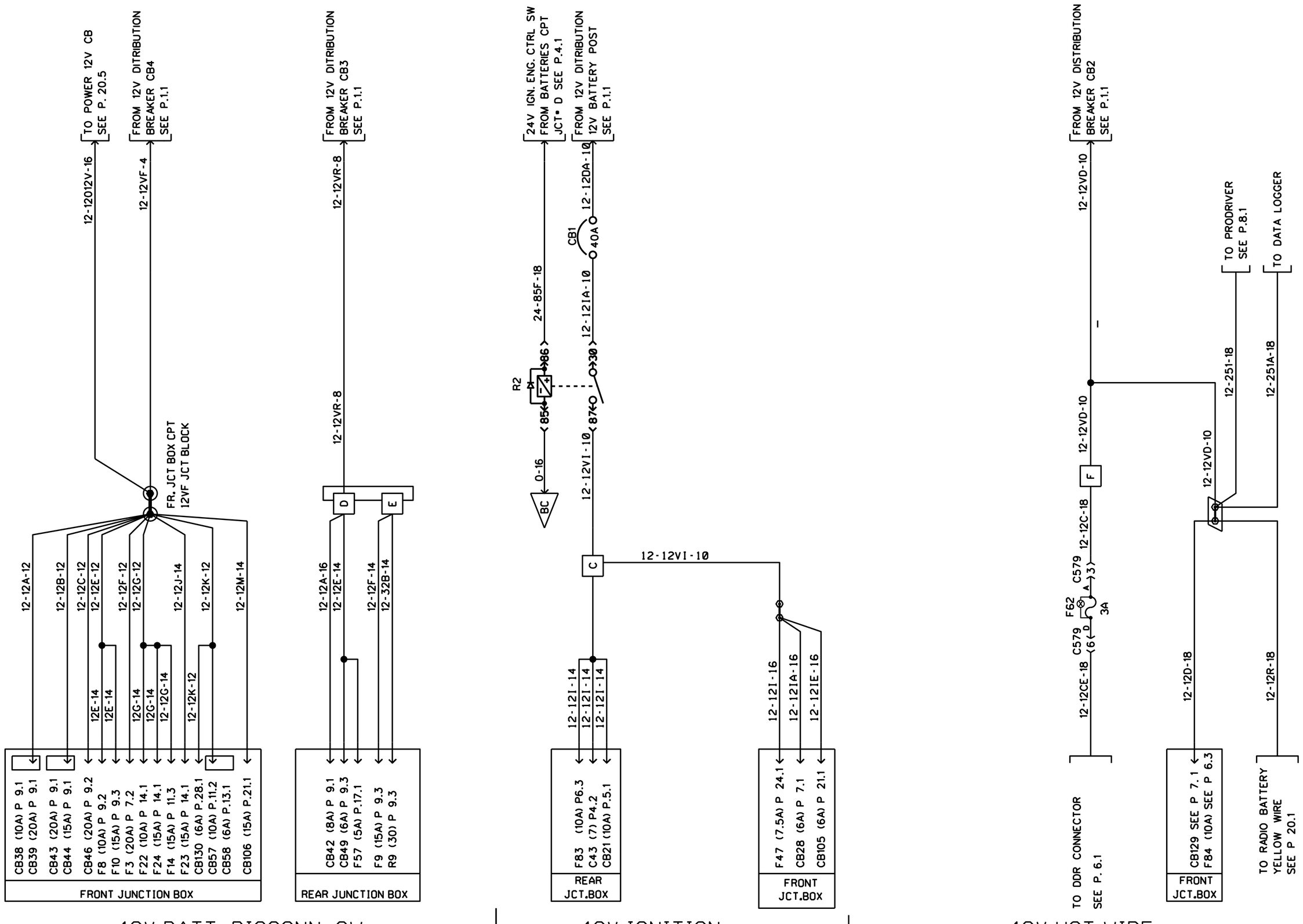

12V BATT. DISCONN. SW.

12V IGNITION

12V HOT WIRE

PREVOST	WIRING DIAGRAM	NO: D060976	PAGE: 2.1	REVISION 01

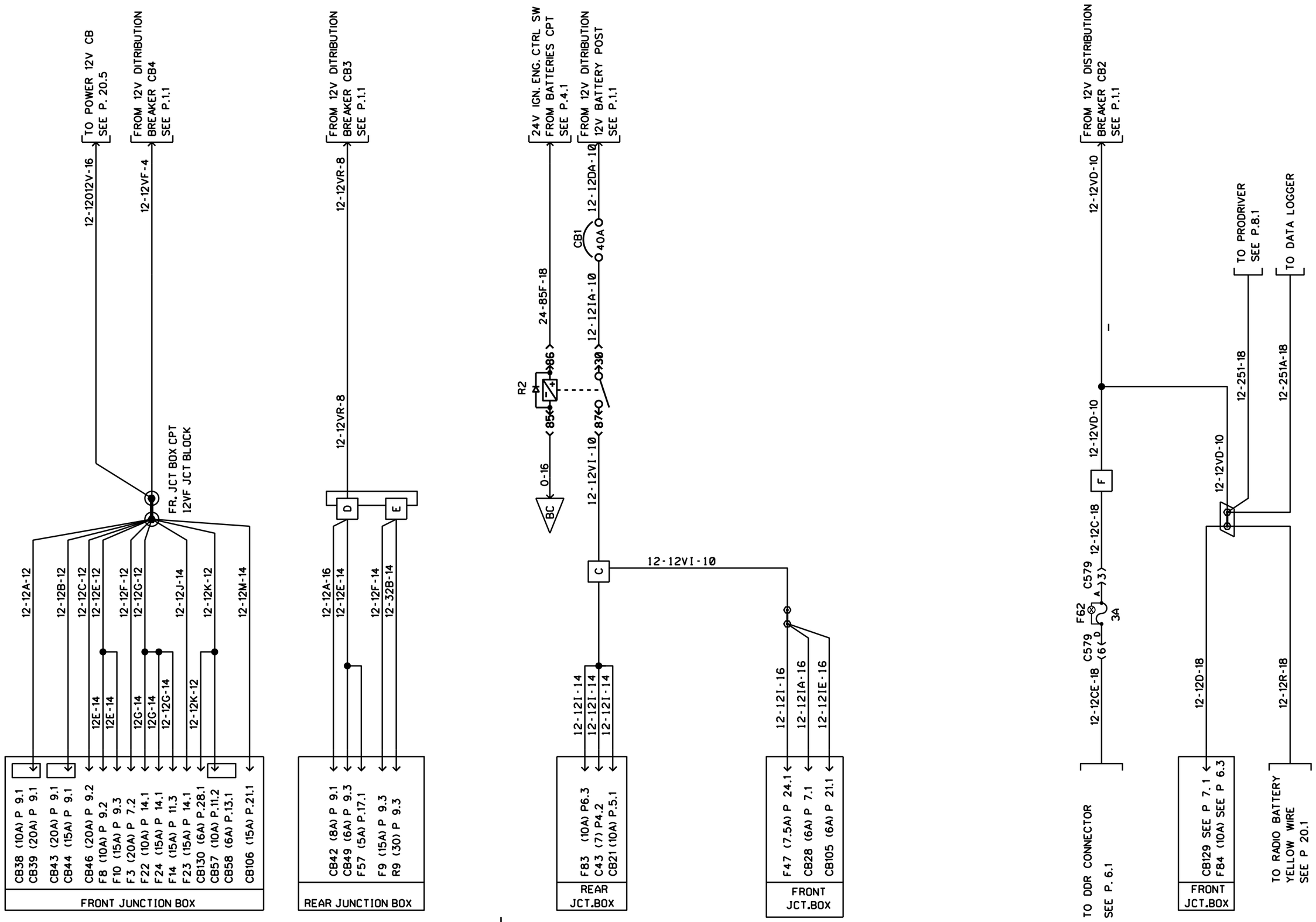

PREVOST	WIRING DIAGRAM	NO: D060976	PAGE: 2.1	REVISION 02

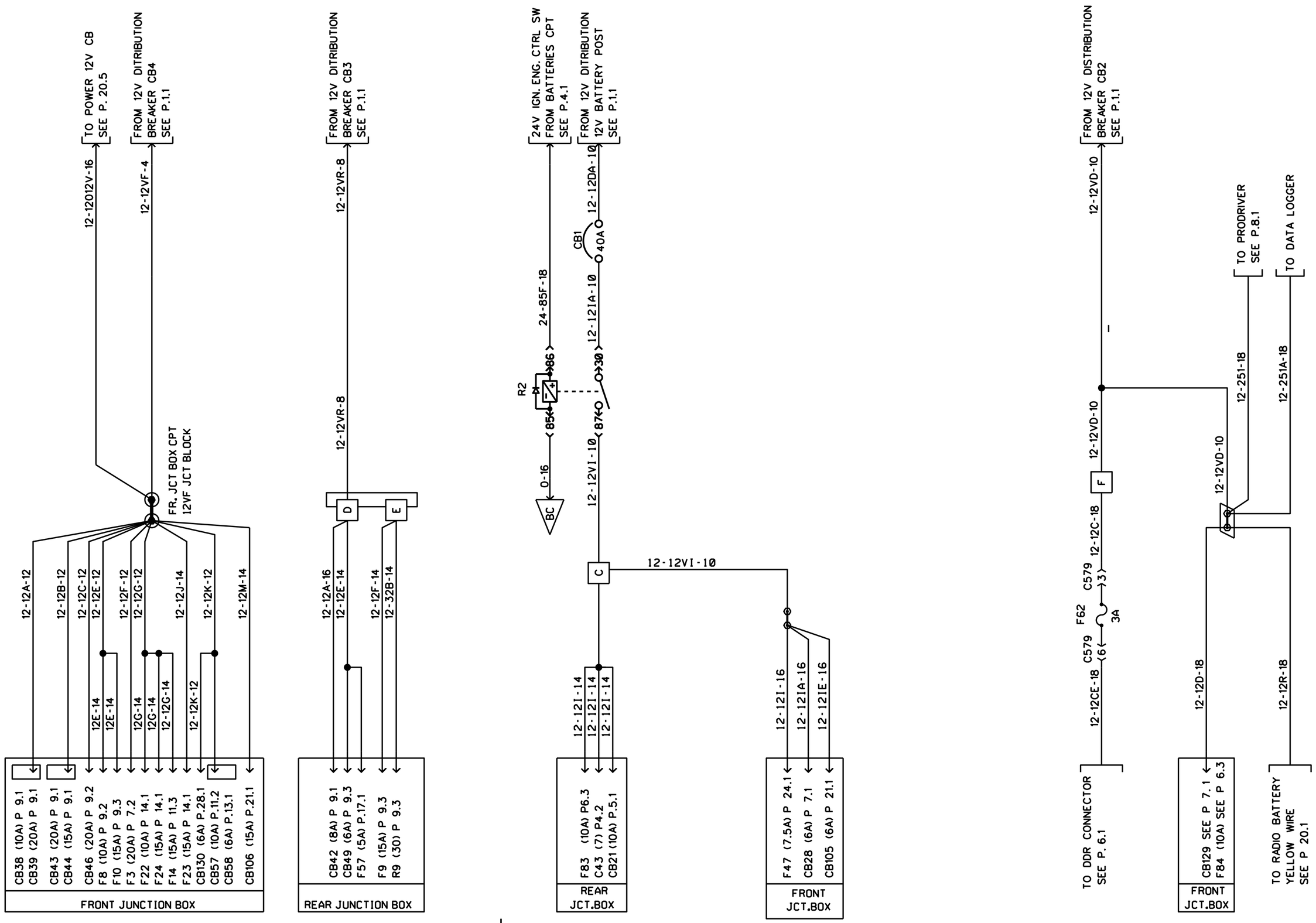

12V BATT. DISCONN. SW. | 12V IGNITION | 12V HOT WIRE

PREVOST	WIRING DIAGRAM	NO: D060976	PAGE: 2.1	REVISION 04

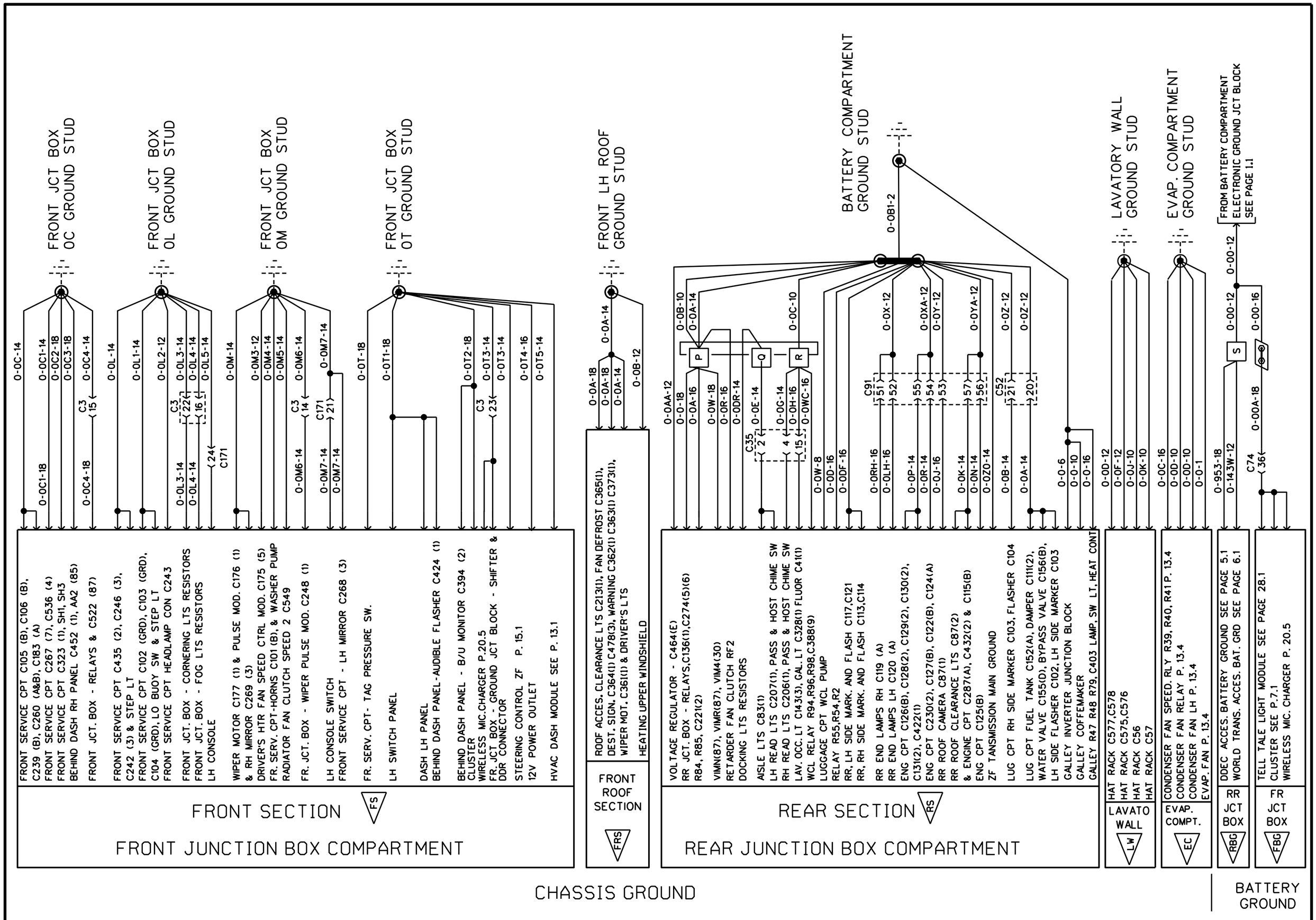

PREVOST | WIRING DIAGRAM | NO: D060976 | PAGE: 3.1 | REVISION 00

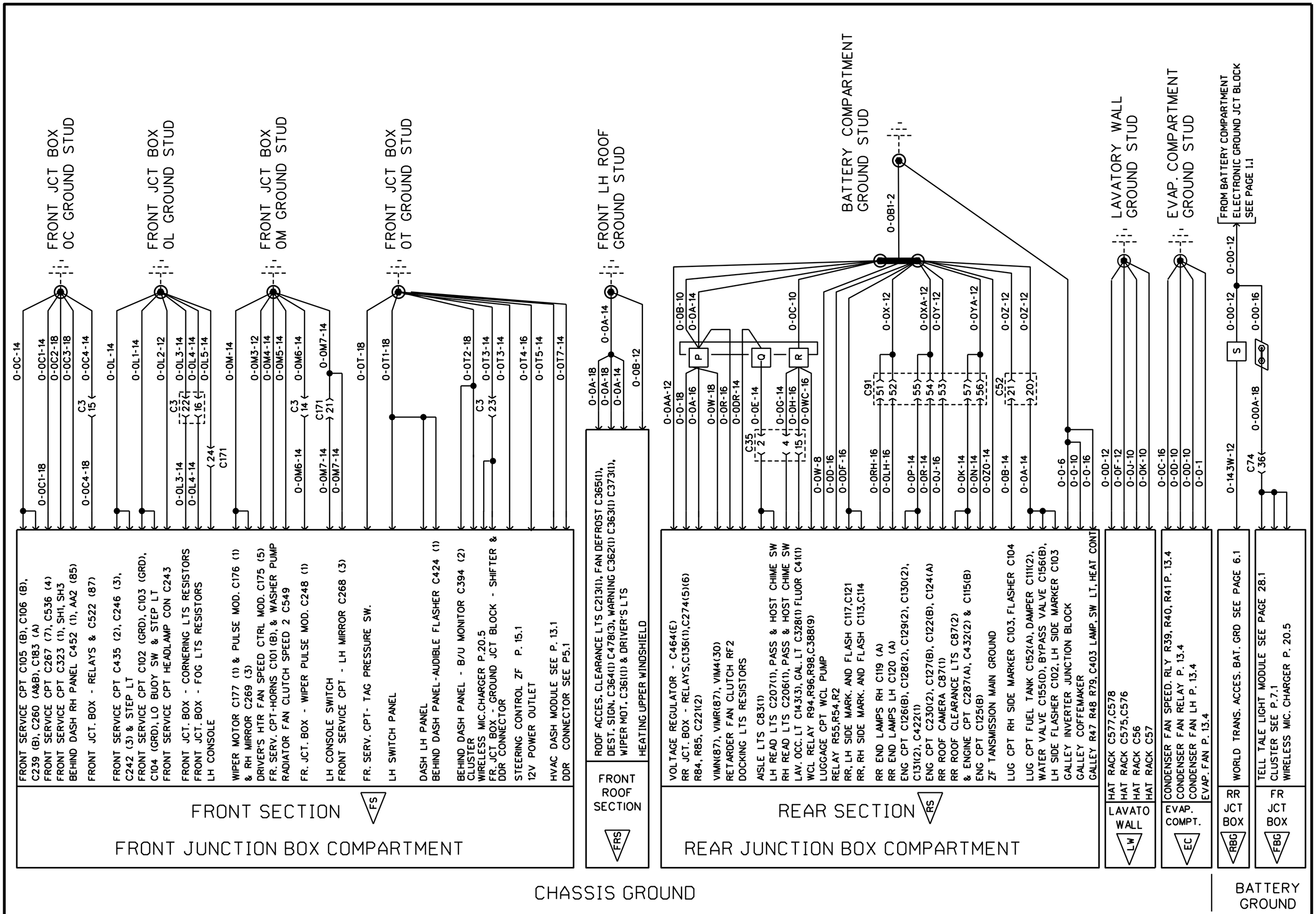

PREVOST | WIRING DIAGRAM | NO: D060976 | PAGE: 3.1 | REVISION 08

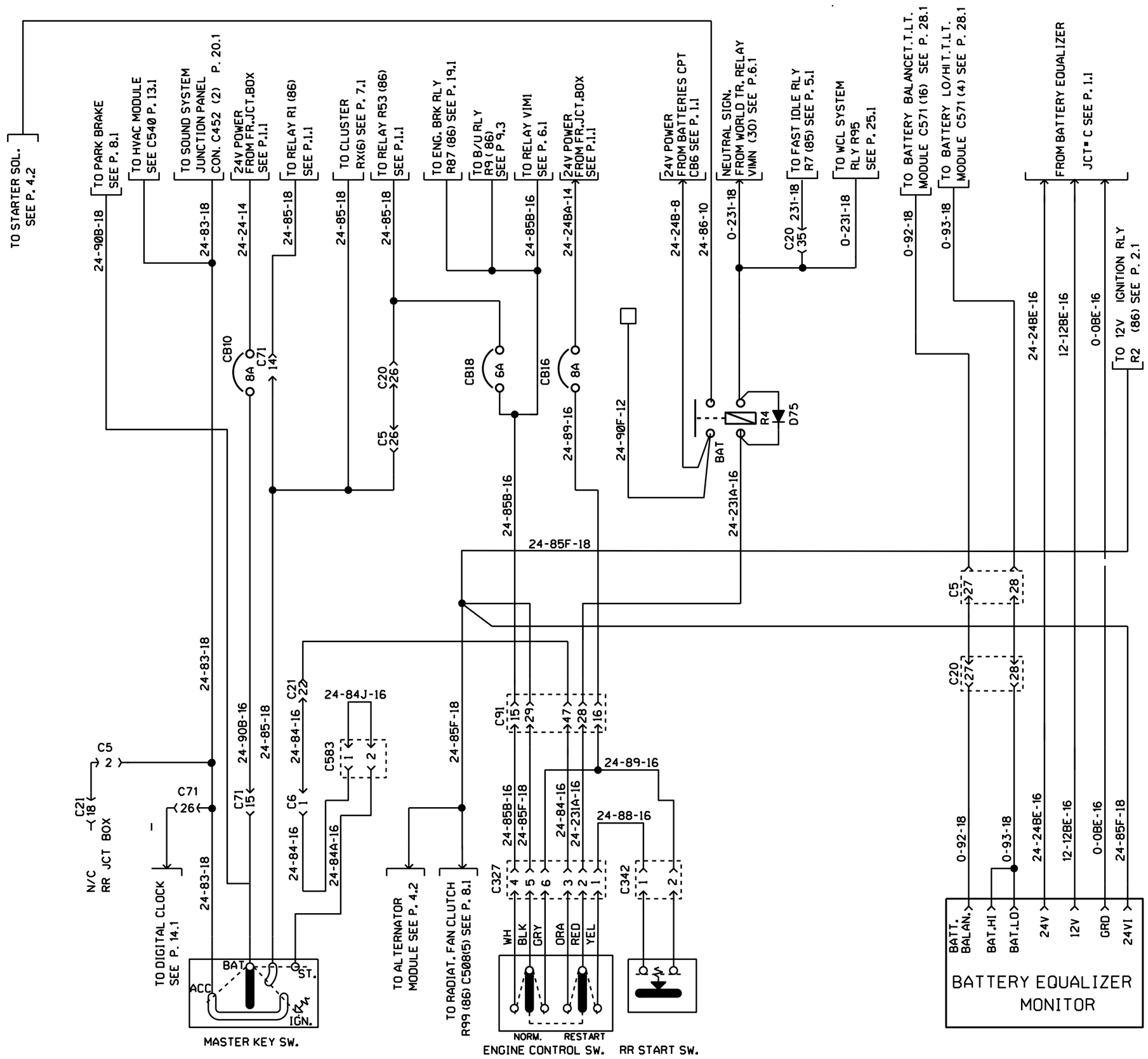

ENGINE CONTROL

PREVOST	WIRING DIAGRAM	NO: D060976	PAGE: 4.1	REVISION 00

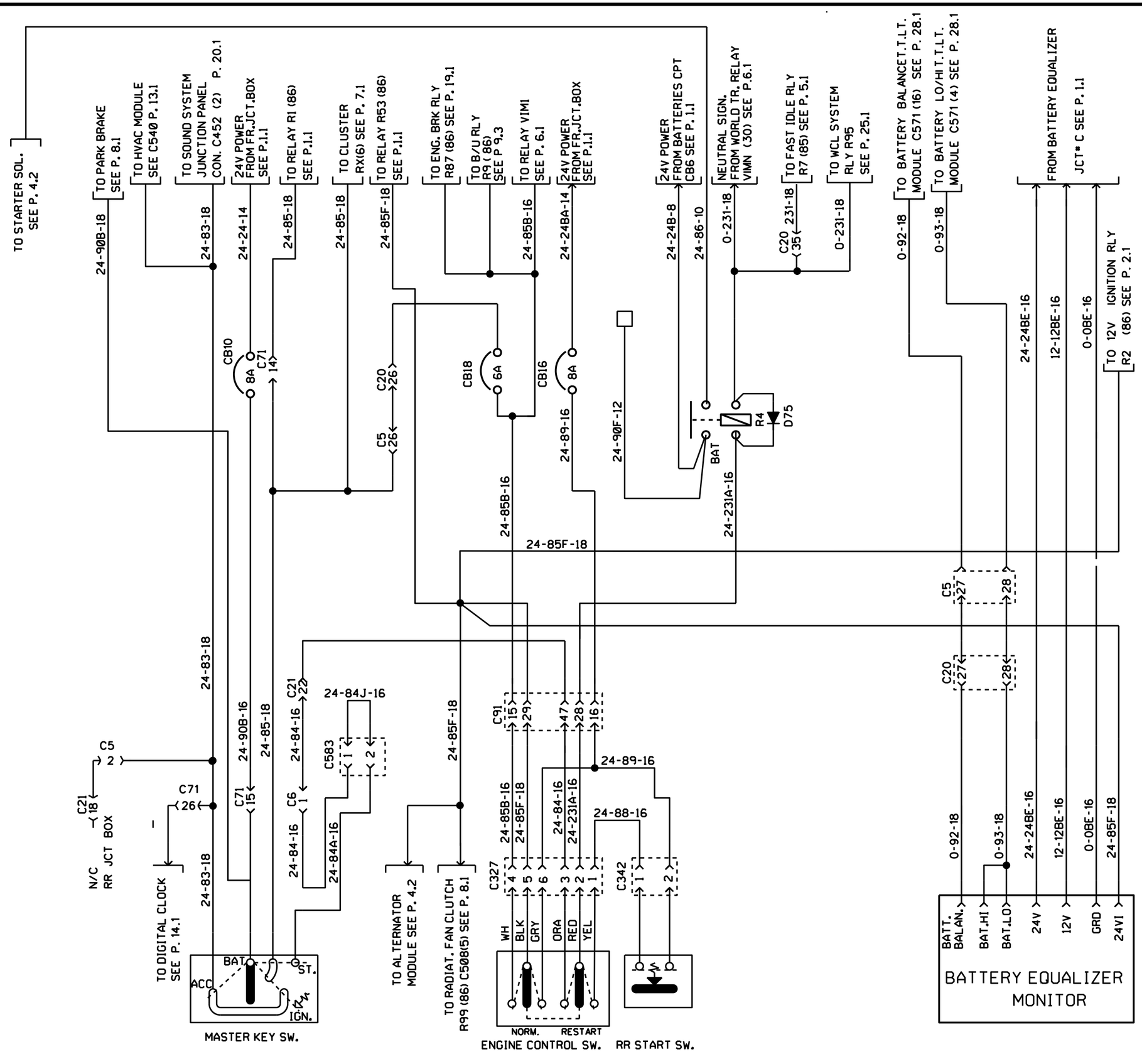

ENGINE CONTROL

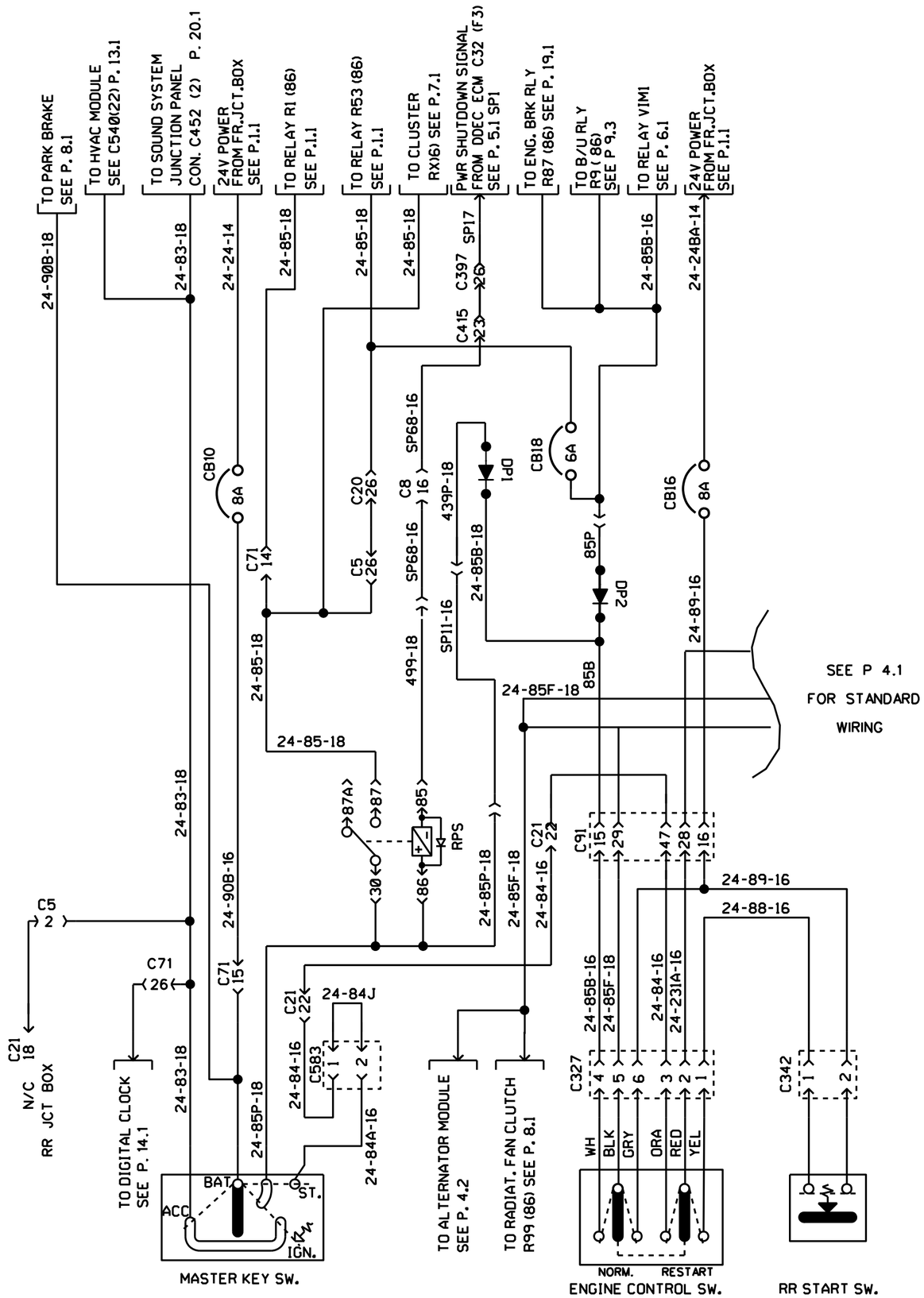

ENGINE CONTROL WITH POWER SHUTDOWN & IDLER TIMER

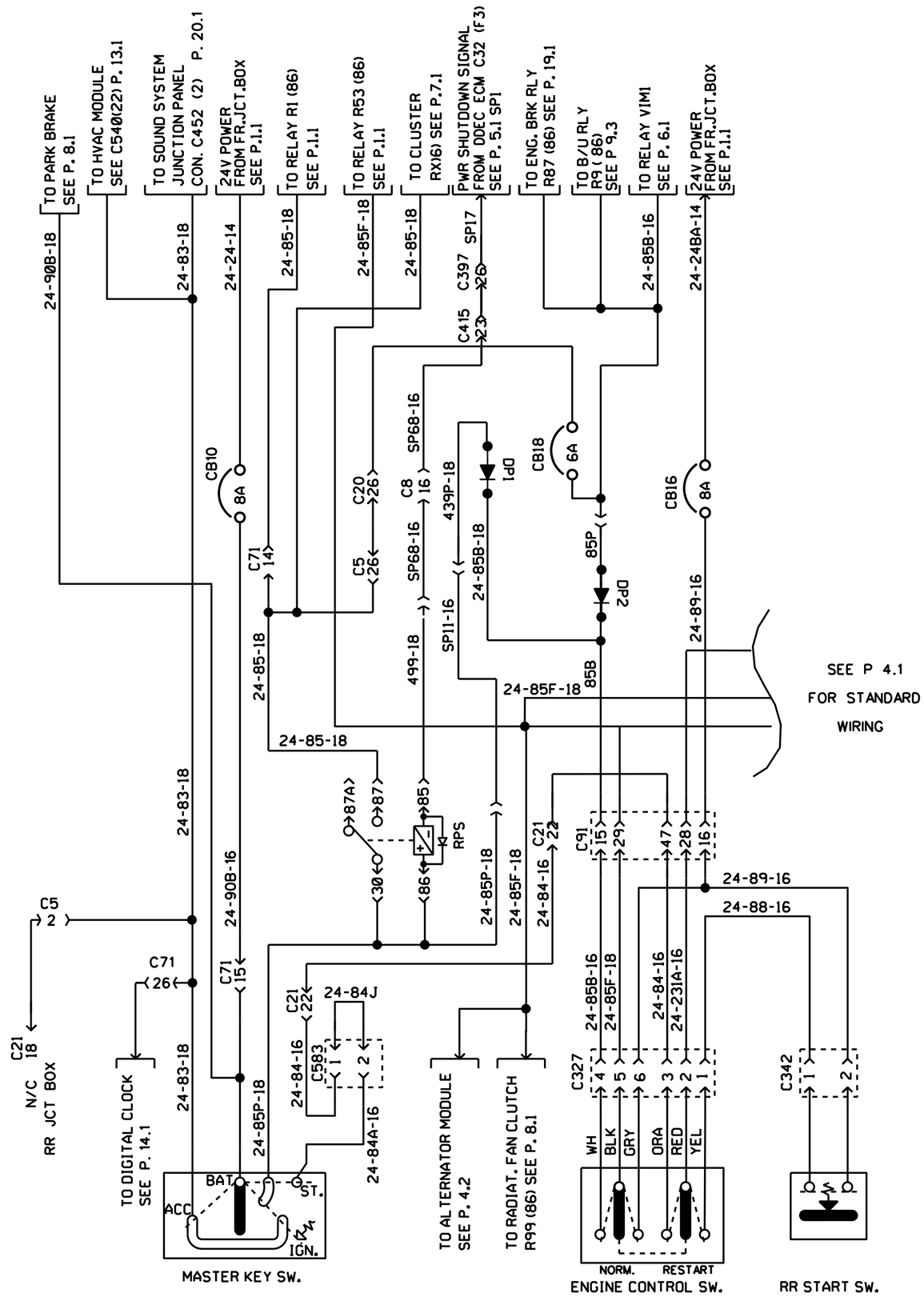

ENGINE CONTROL WITH POWER SHUTDOWN & IDLER TIMER

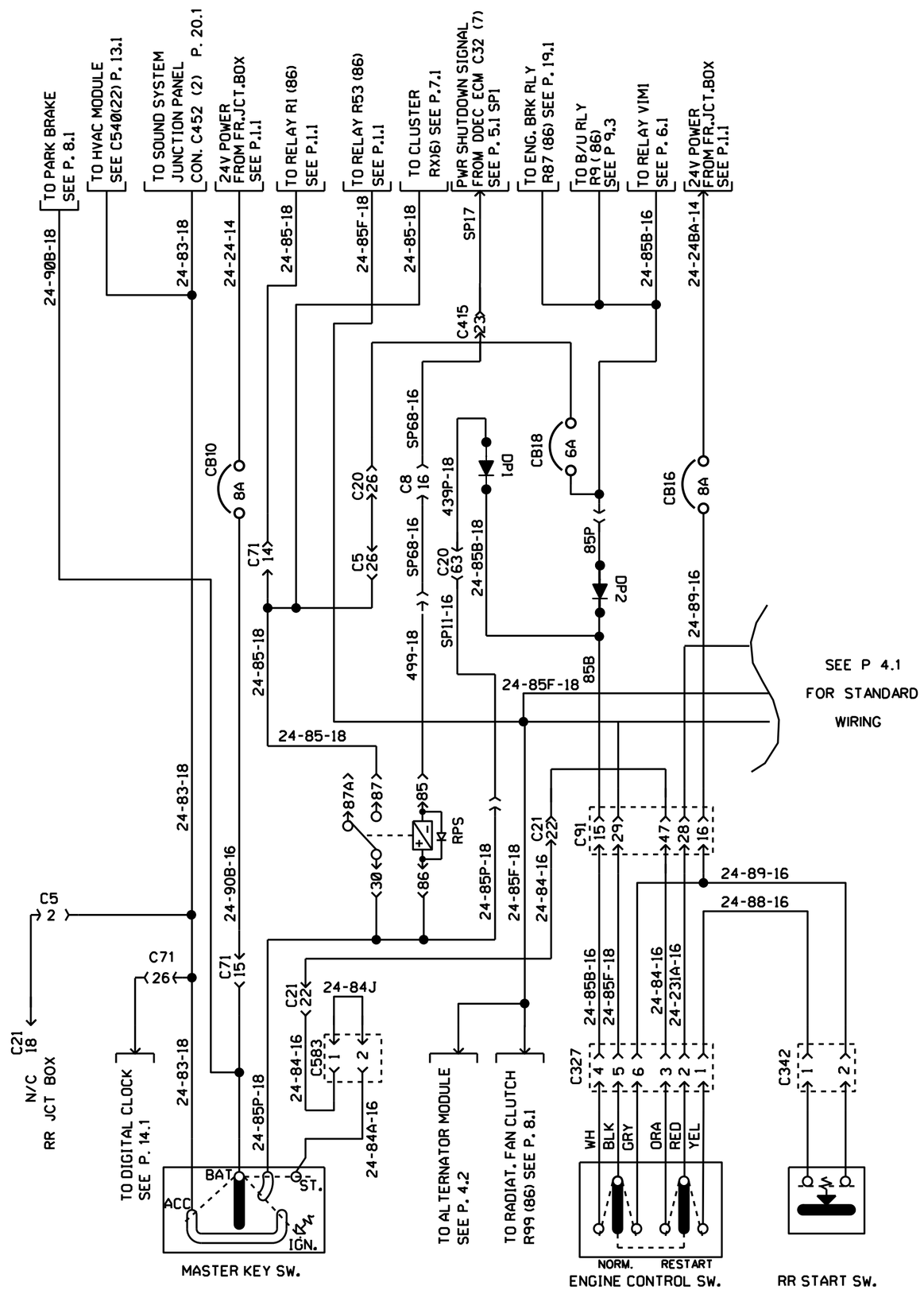

ENGINE CONTROL WITH POWER SHUTDOWN & IDLER TIMER

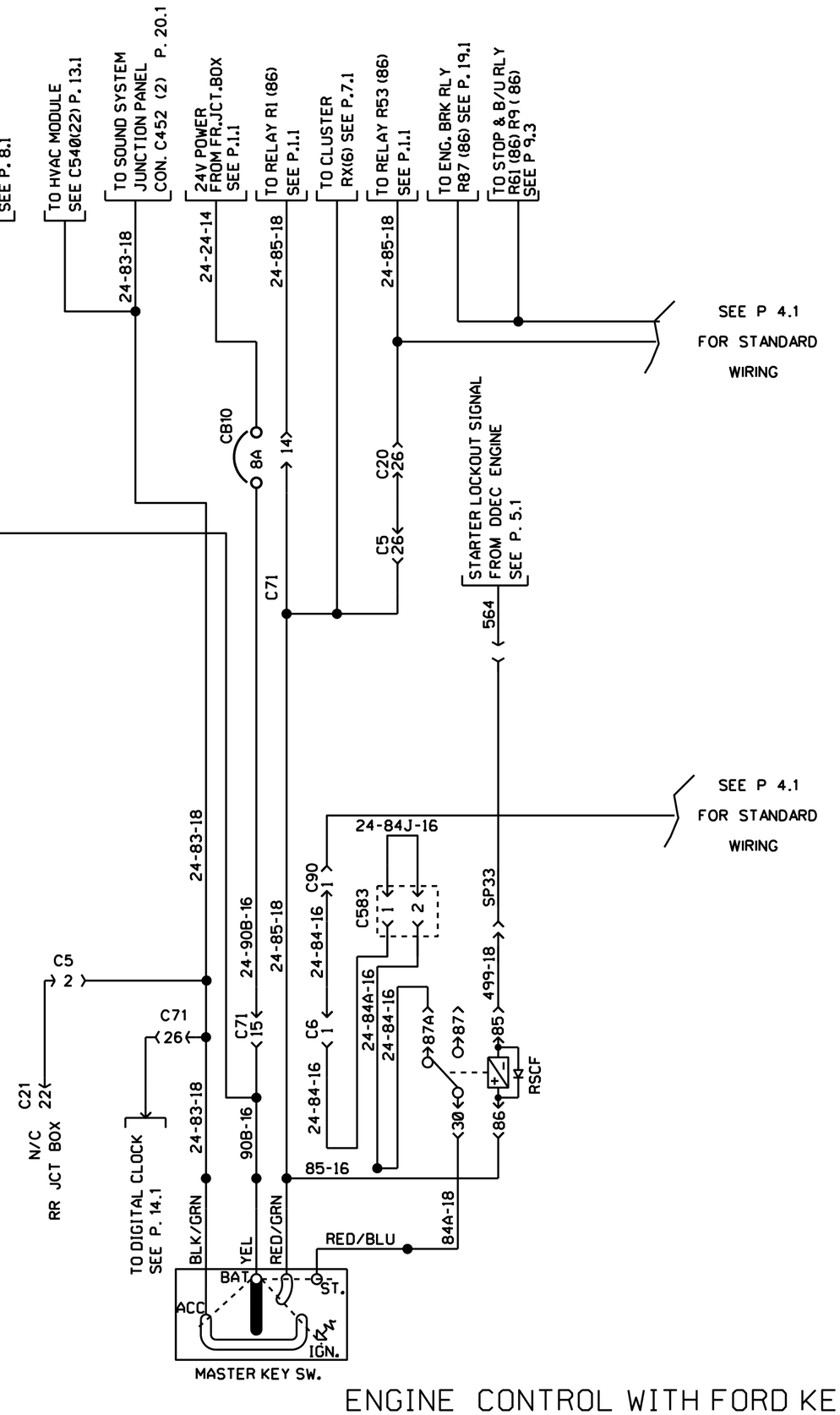

ENGINE CONTROL WITH FORD KEY

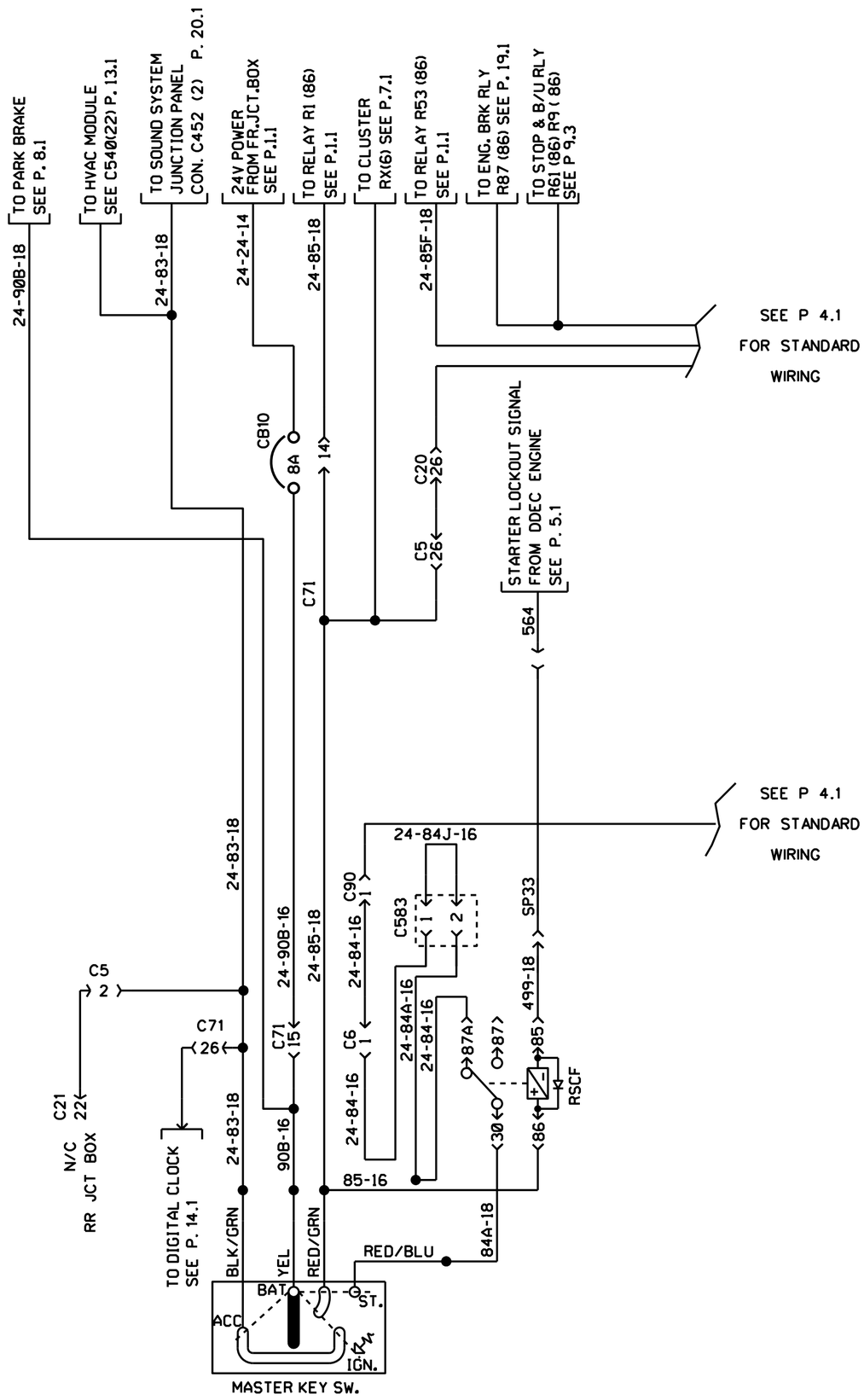

ENGINE CONTROL WITH FORD KEY

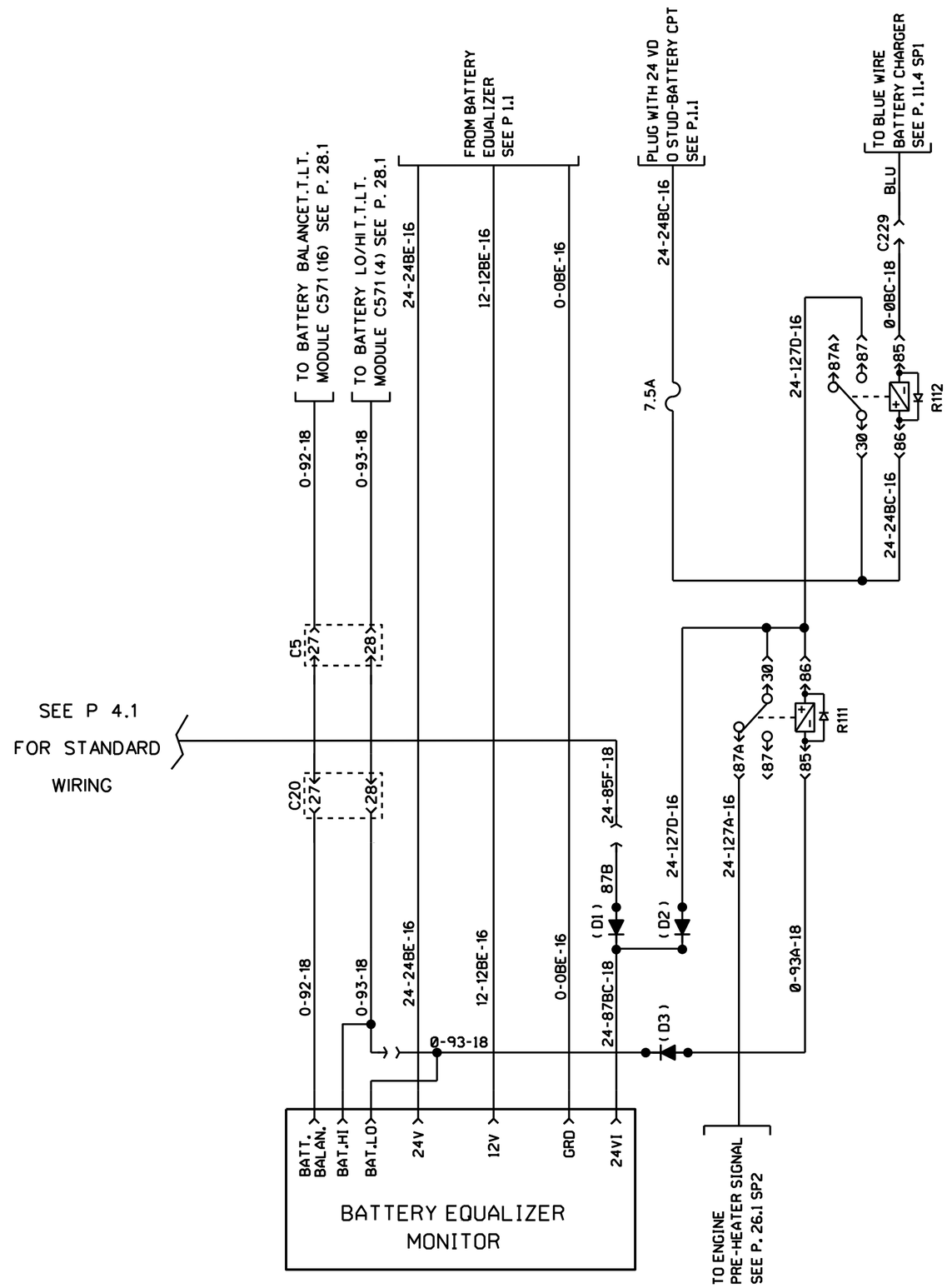

PRE-HEATER ON WITH CHARGER ON

PREVOST	WIRING DIAGRAM	NO: D060976	PAGE: 4.1sp3	REVISION 00

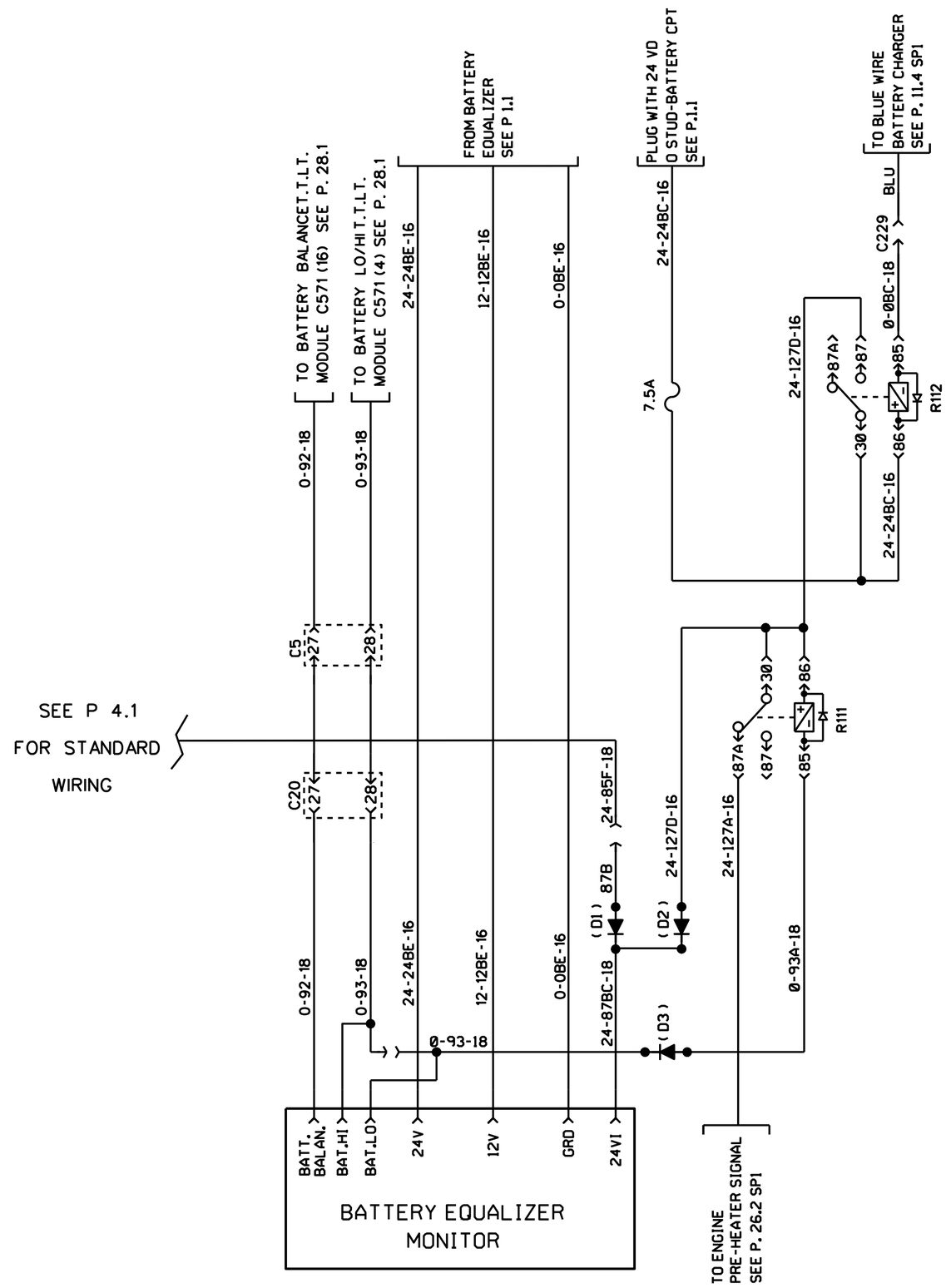

PRE-HEATER ON WITH CHARGER ON

PREVOST	WIRING DIAGRAM	NO: D060976	PAGE: 4.1sp3	REVISION 07

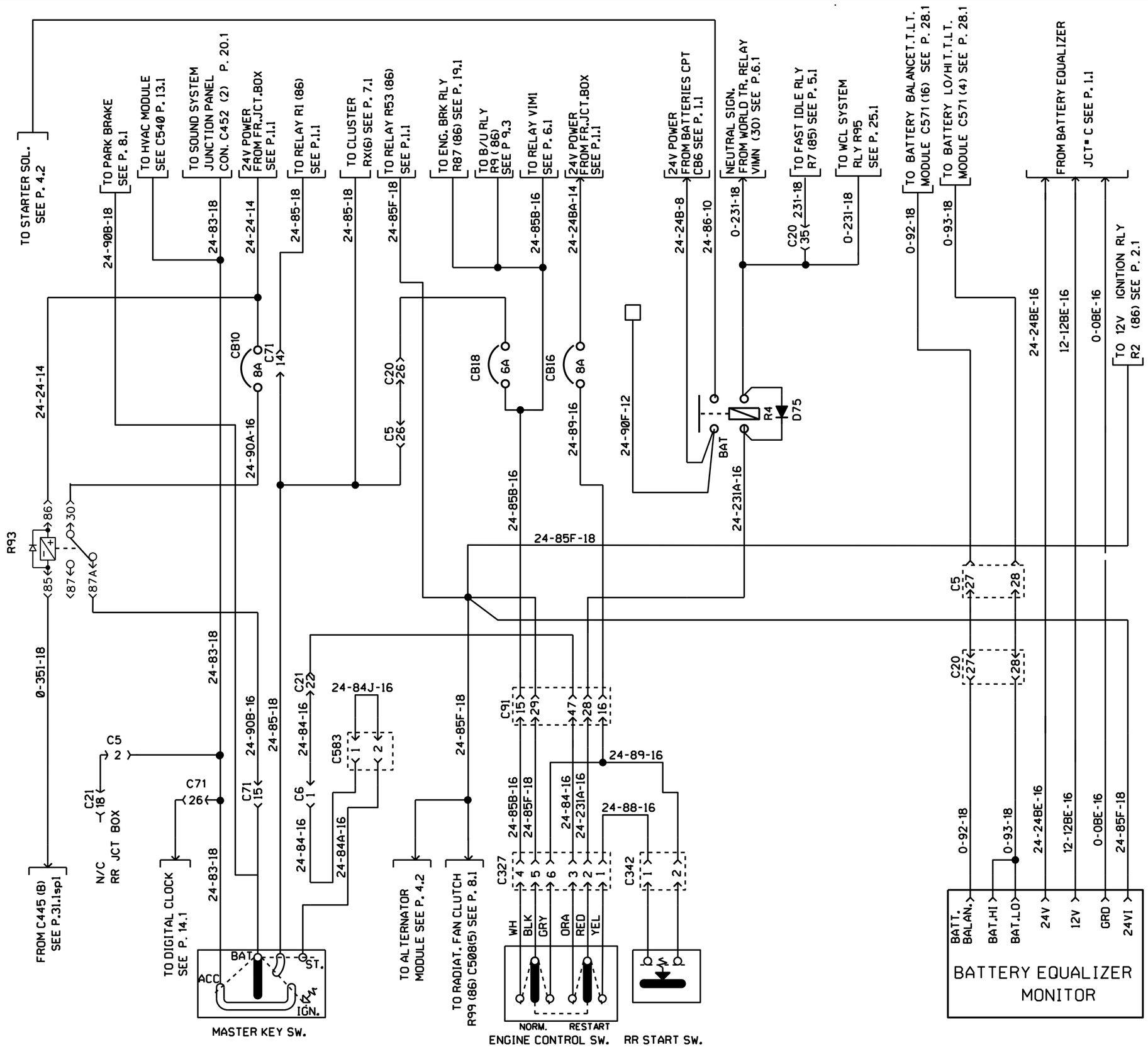

ENGINE CONTROL

PREVOST	WIRING DIAGRAM	NO: D060976	PAGE: 4.1sp4	REVISION 00

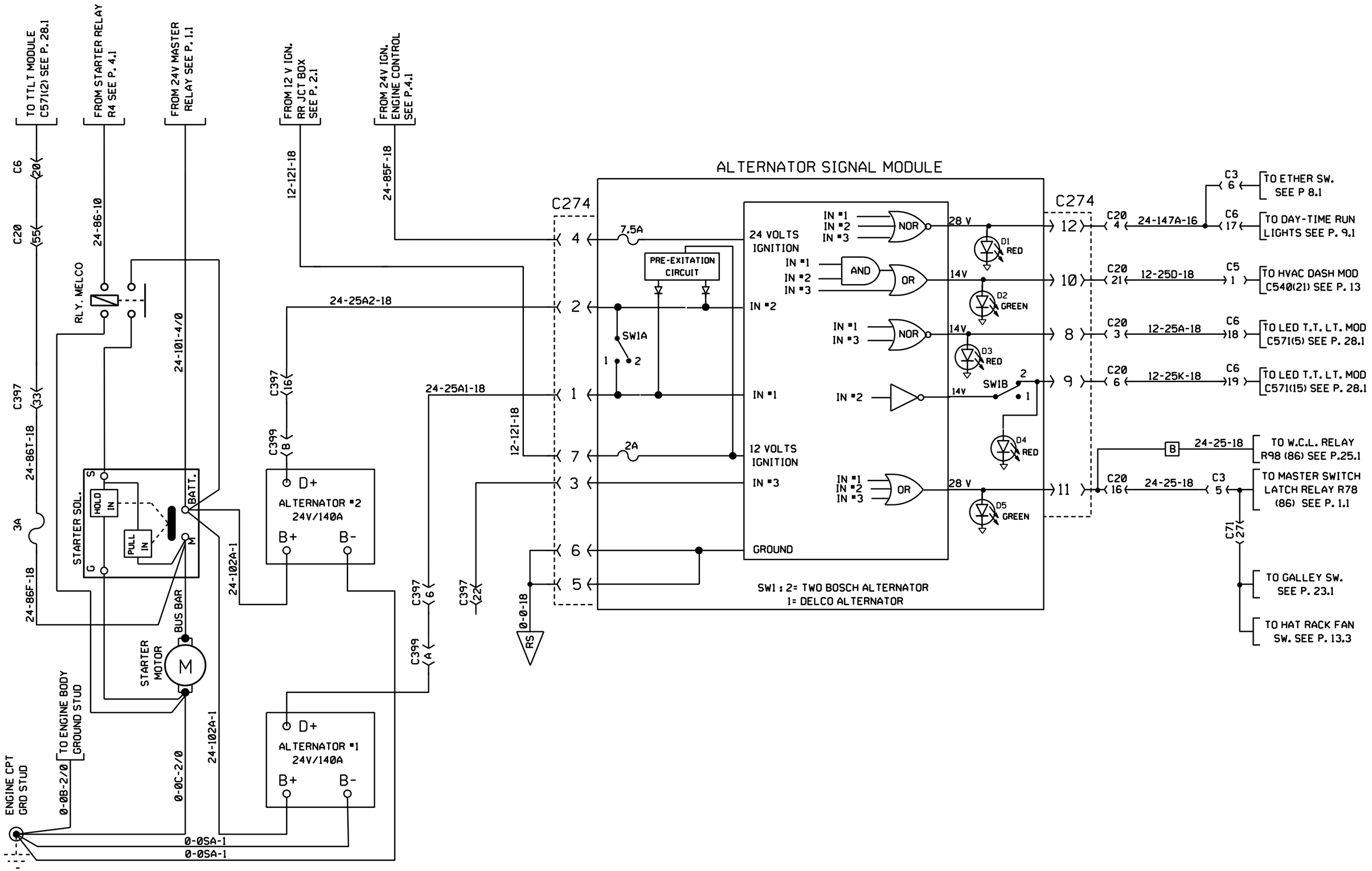

STARTER & BOSCH ALTERNATOR

PREVOST	WIRING DIAGRAM	NO: D060976	PAGE: 4.2	REVISION 00

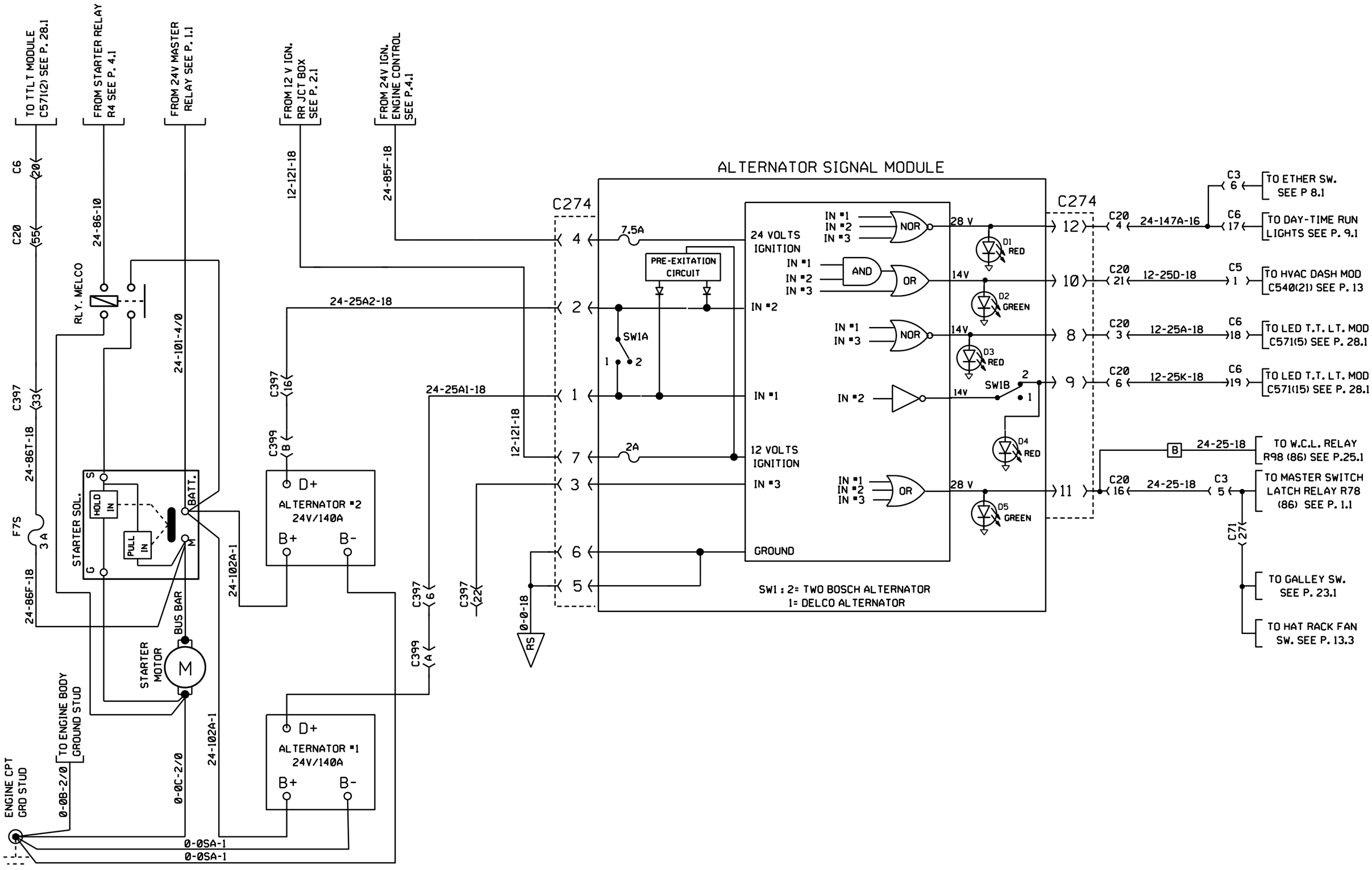

STARTER & BOSCH ALTERNATOR

PREVOST	WIRING DIAGRAM	NO: D060976	PAGE: 4.2	REVISION 07

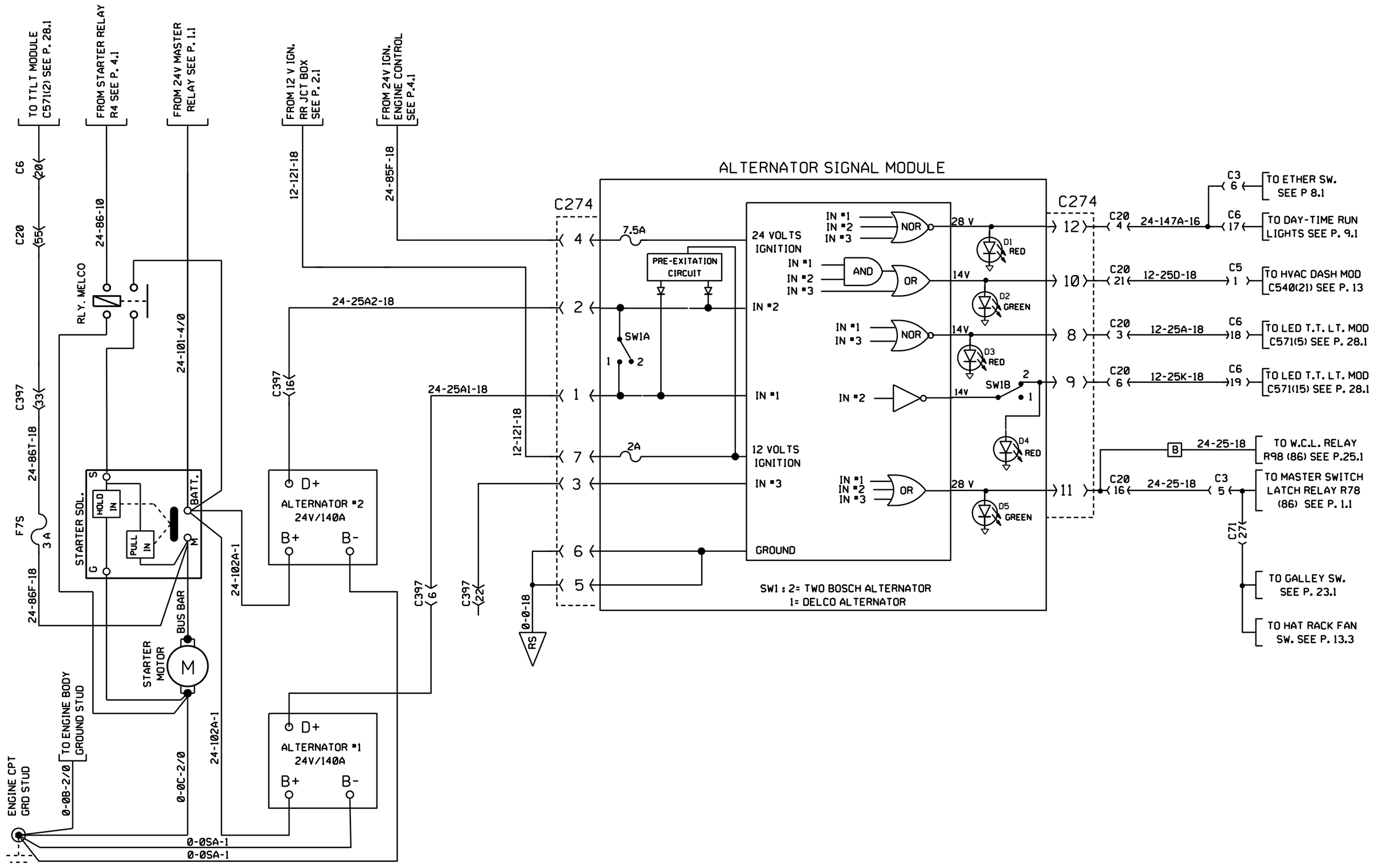

STARTER & BOSCH ALTERNATOR

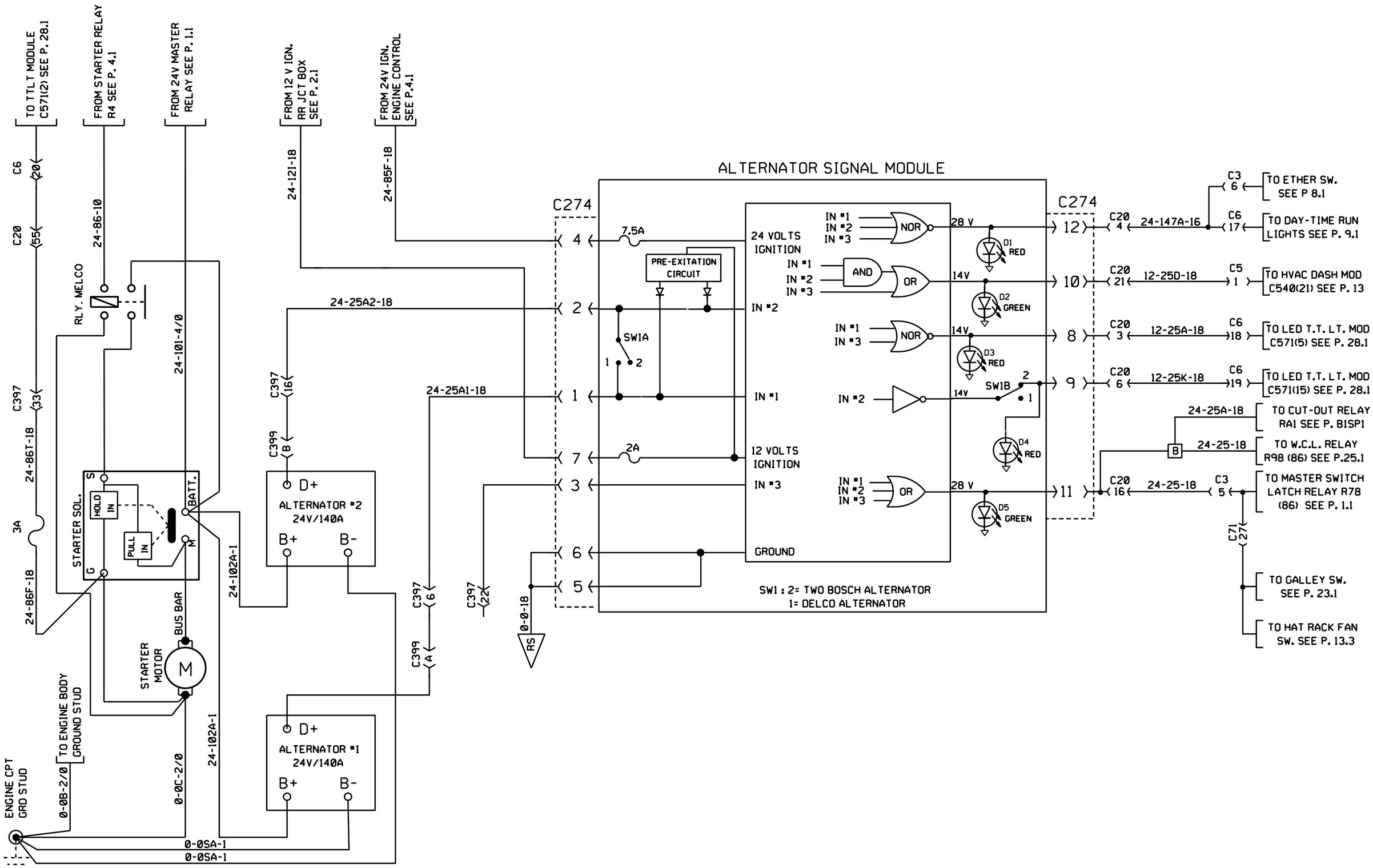

STARTER & BOSCH ALTERNATOR

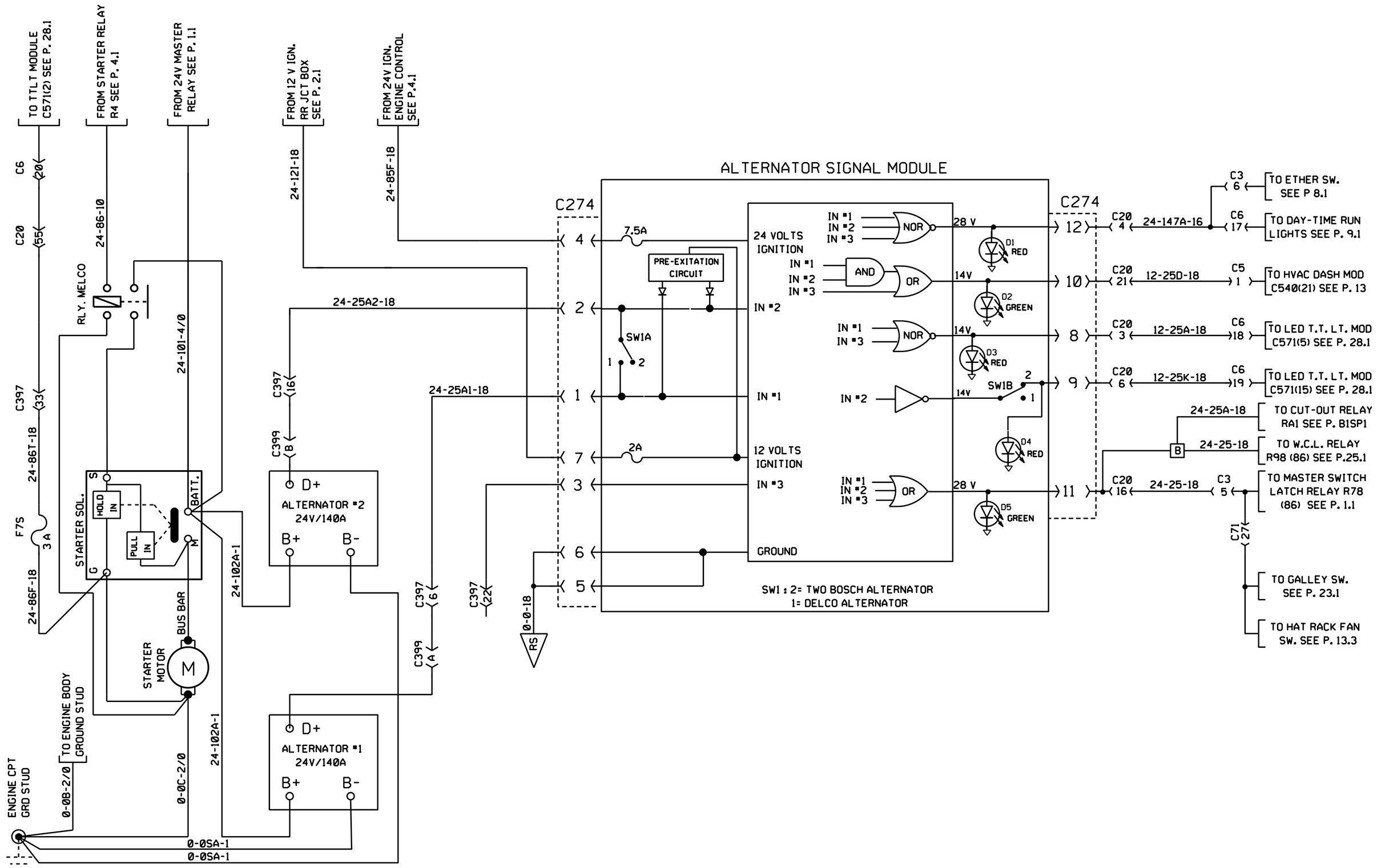

STARTER & BOSCH ALTERNATOR

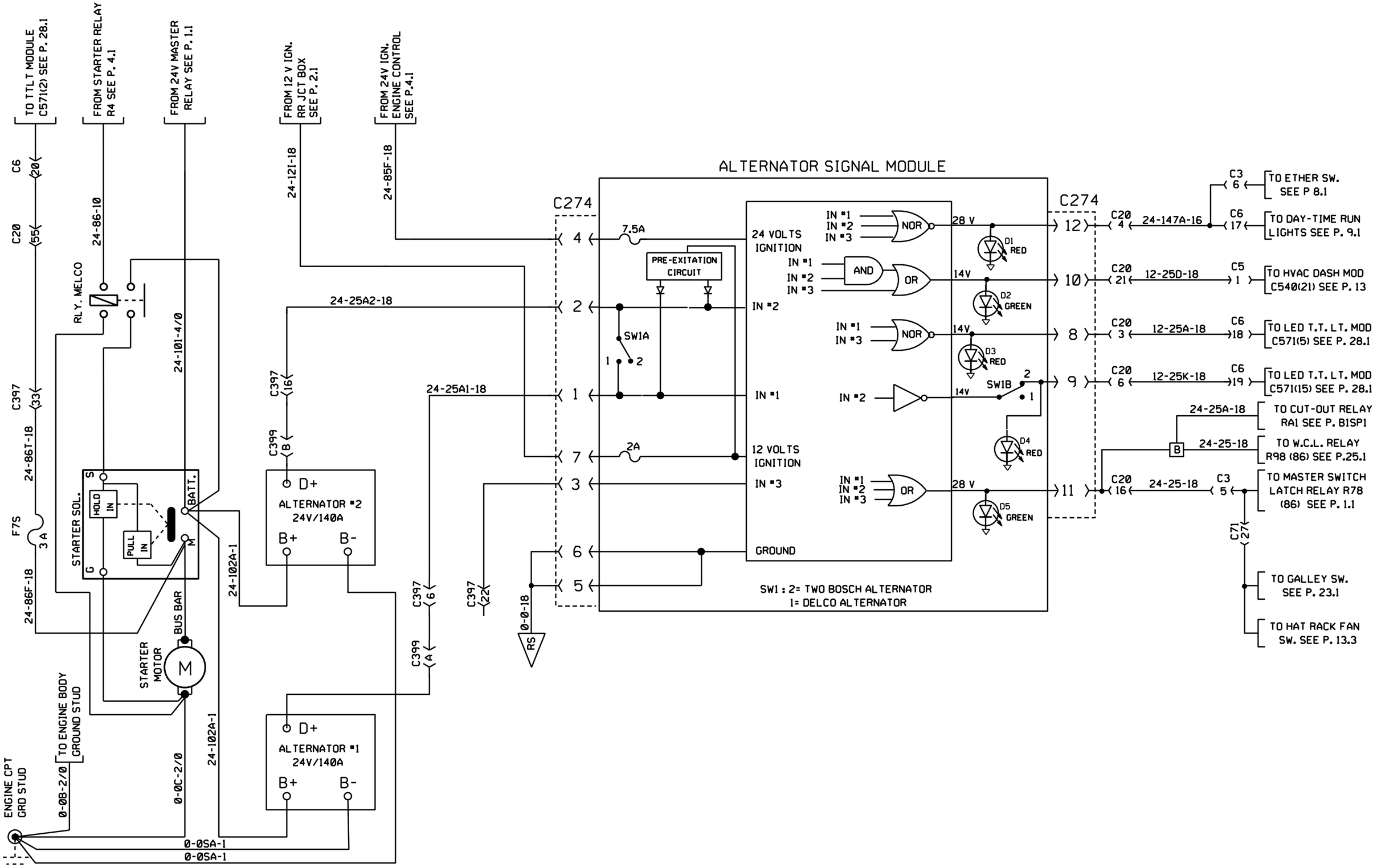

STARTER & BOSCH ALTERNATOR

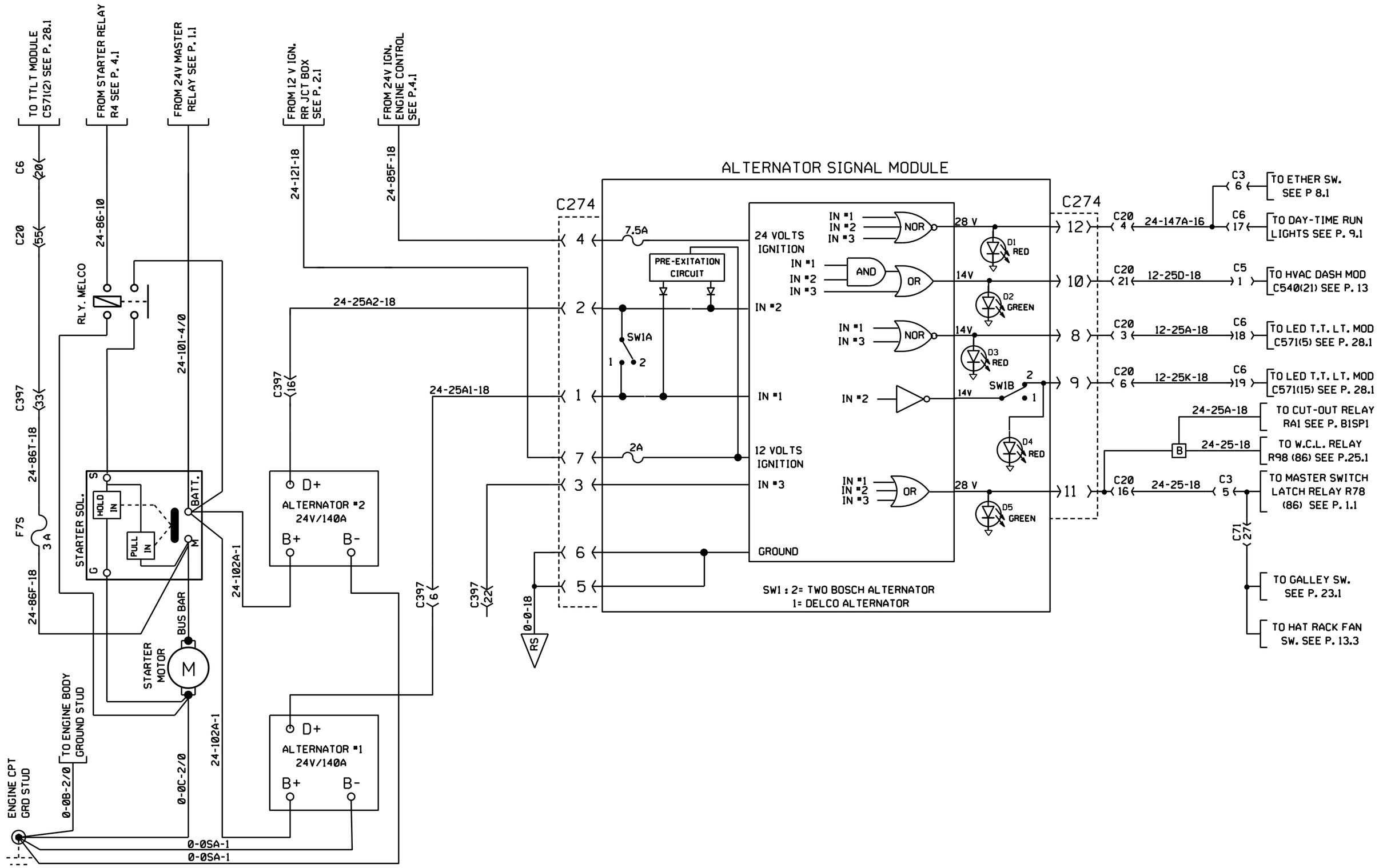

STARTER & BOSCH ALTERNATOR

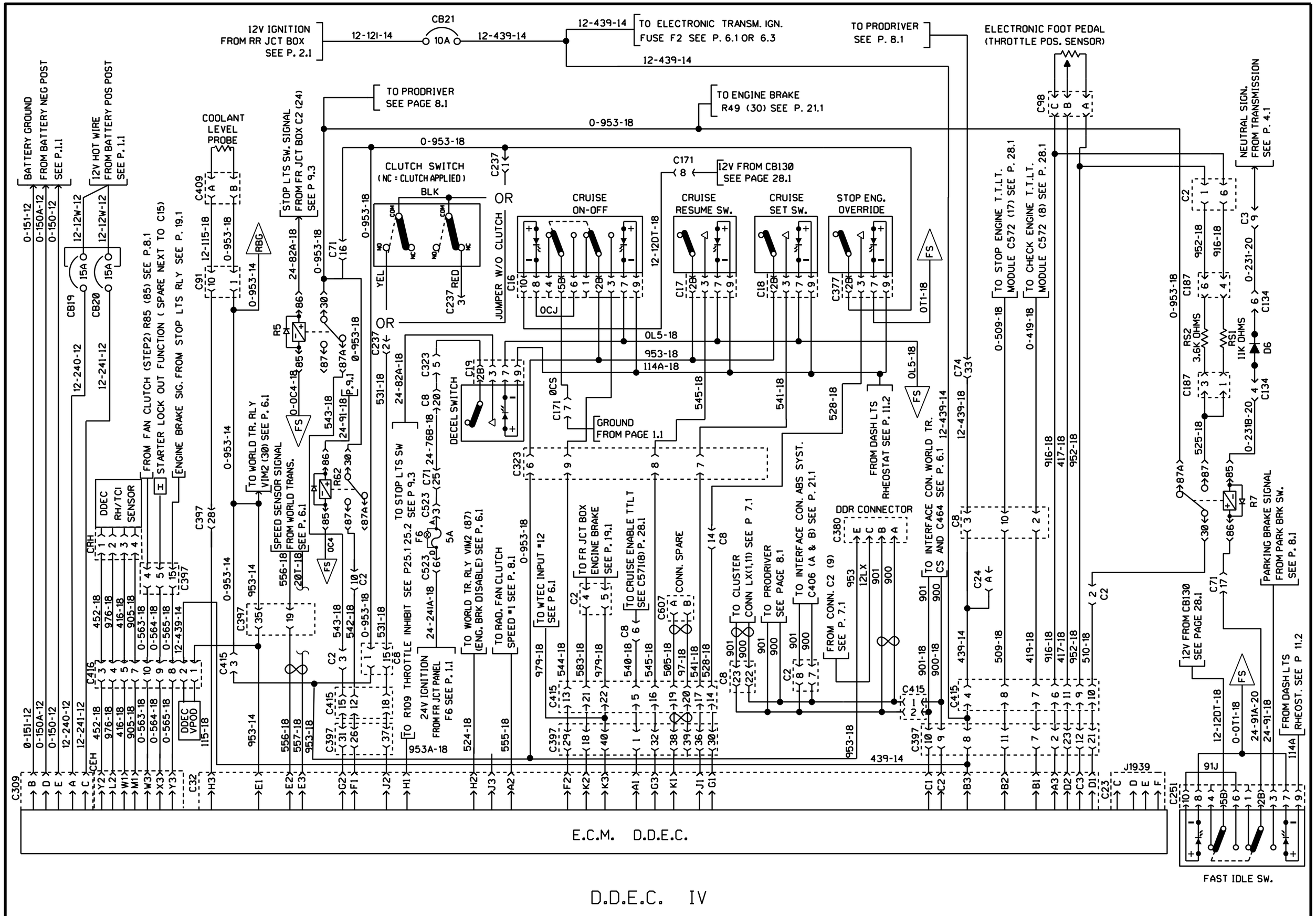

D.D.E.C. IV

PREVOST	WIRING DIAGRAM	NO: D060976	PAGE: 5.1	REVISION 00

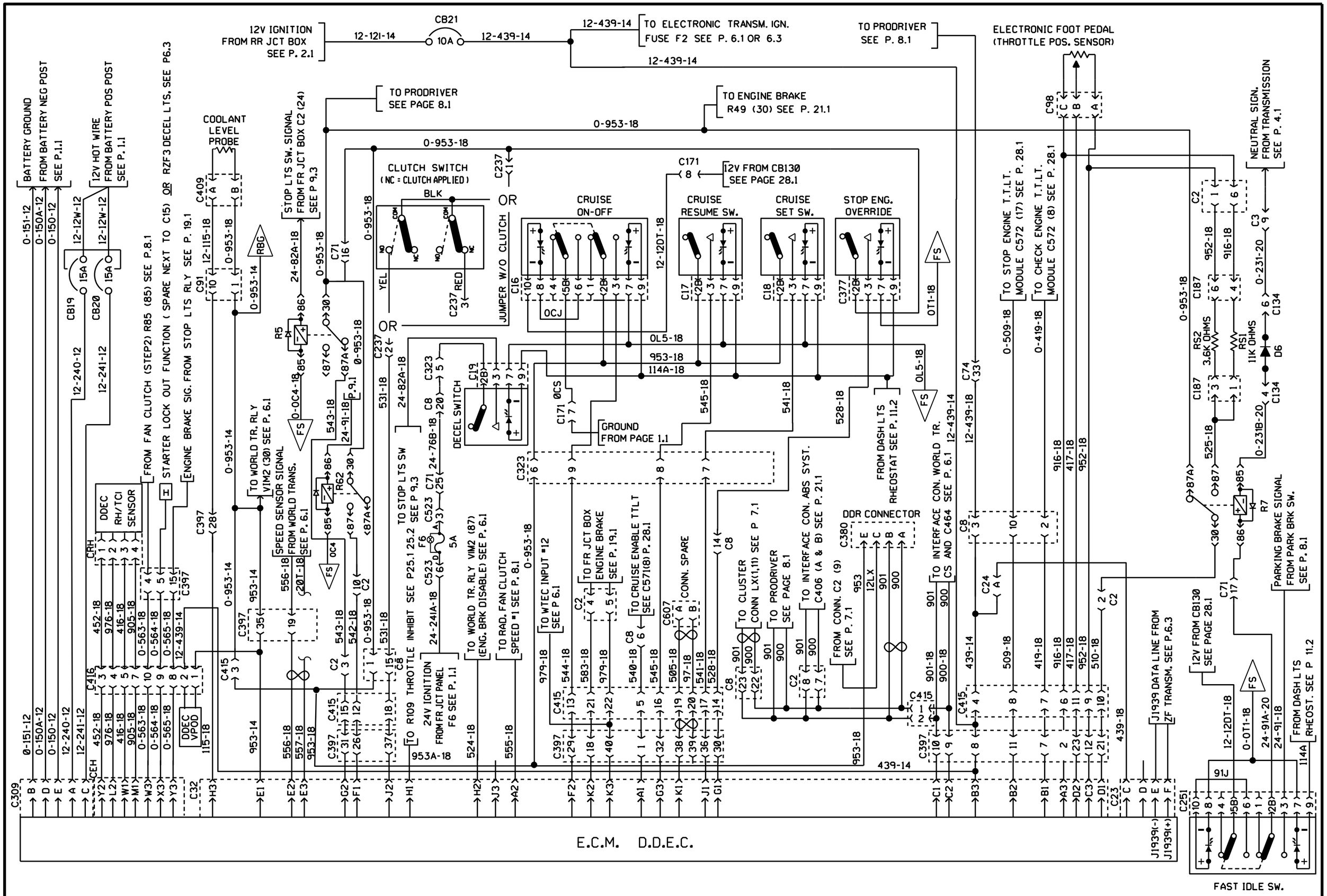

D.D.E.C. IV

PREVOST	WIRING DIAGRAM	NO: D060976	PAGE: 5.1	REVISION 01

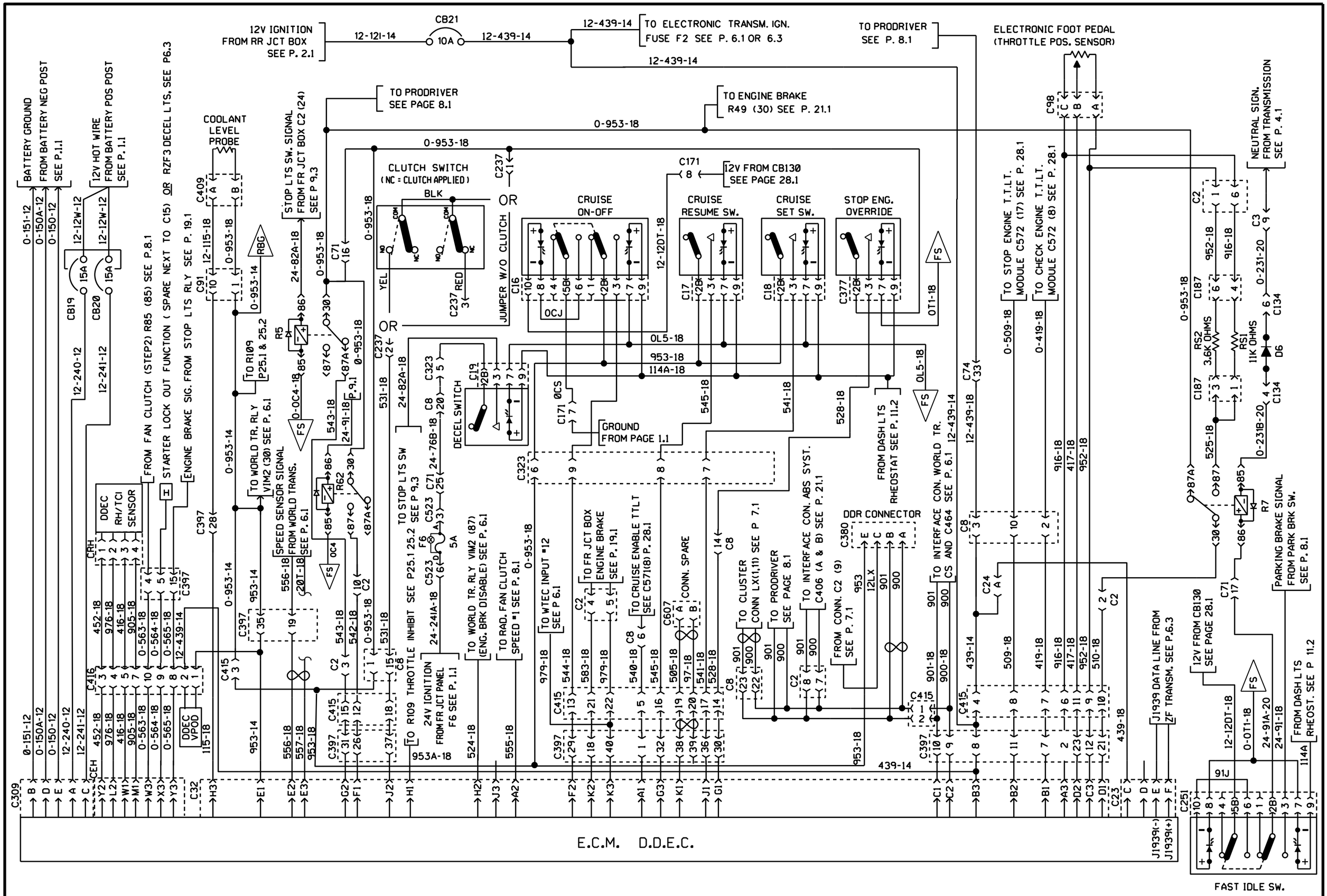

D.D.E.C. IV

PREVOST	WIRING DIAGRAM	NO: D060976	PAGE: 5.1	REVISION 02

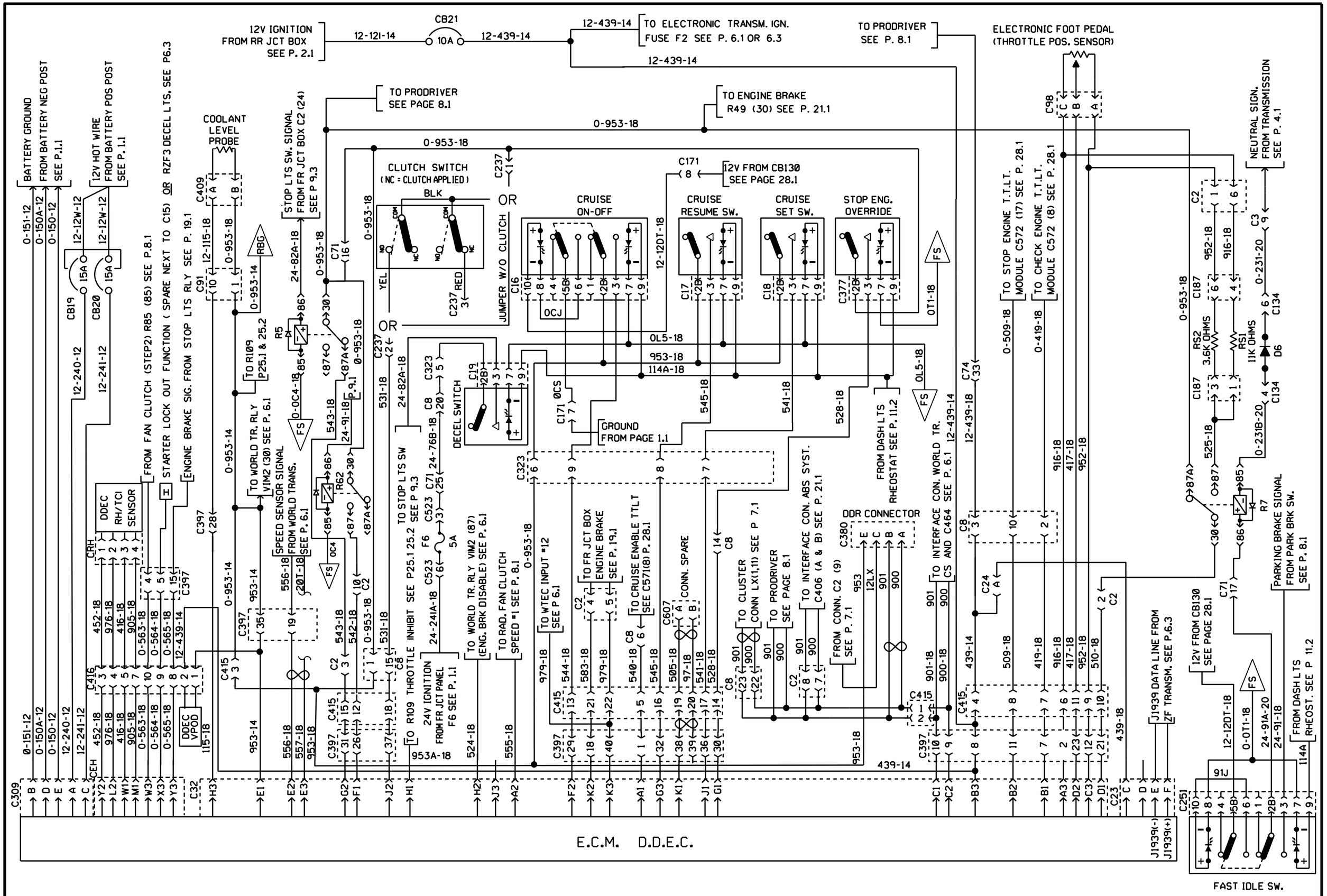

D.D.E.C. IV

PREVOST	WIRING DIAGRAM	NO: D060976	PAGE: 5.1	REVISION 04

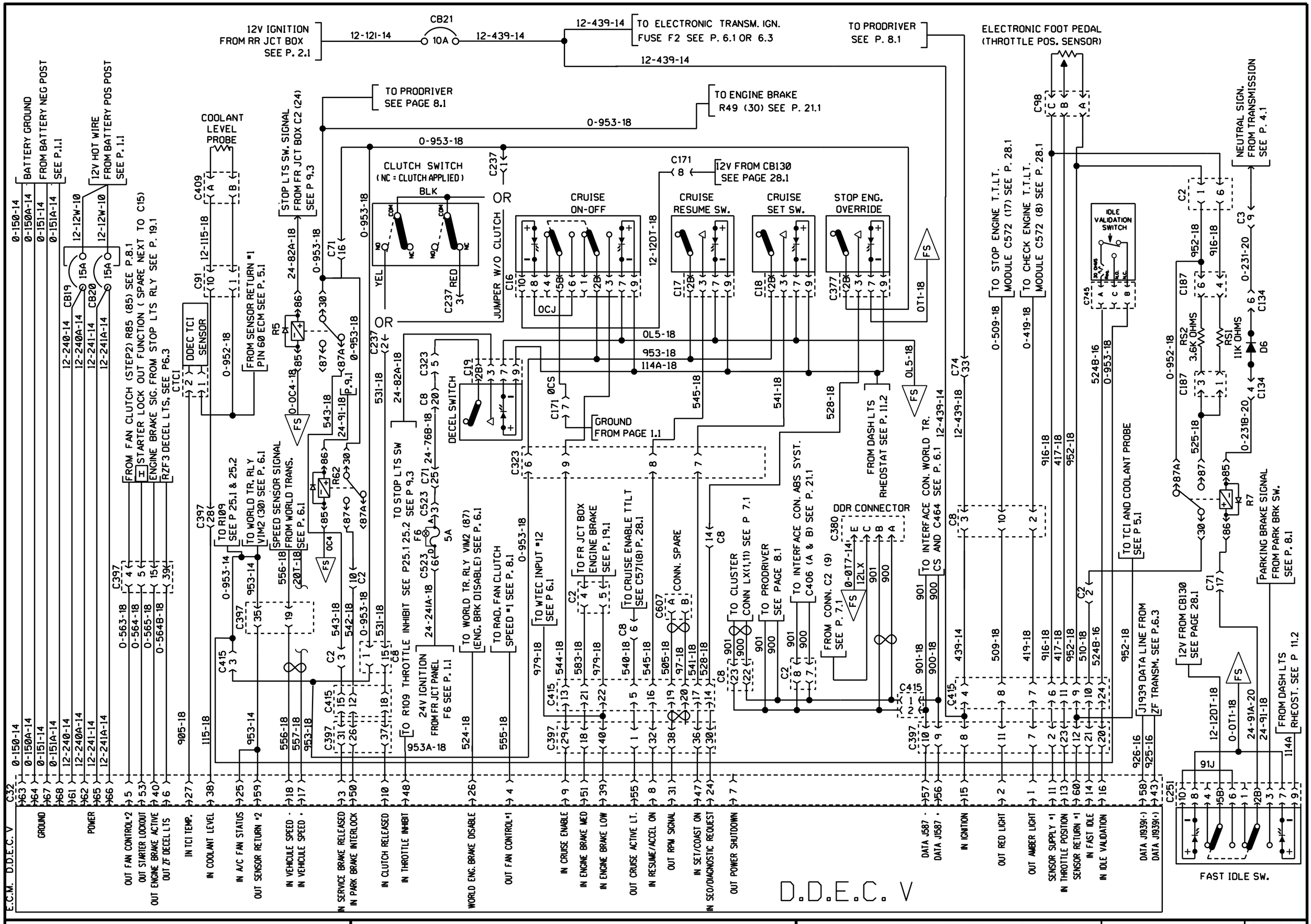

PREVOST | WIRING DIAGRAM | NO: D060976 | PAGE: 5.1 | REVISION 08

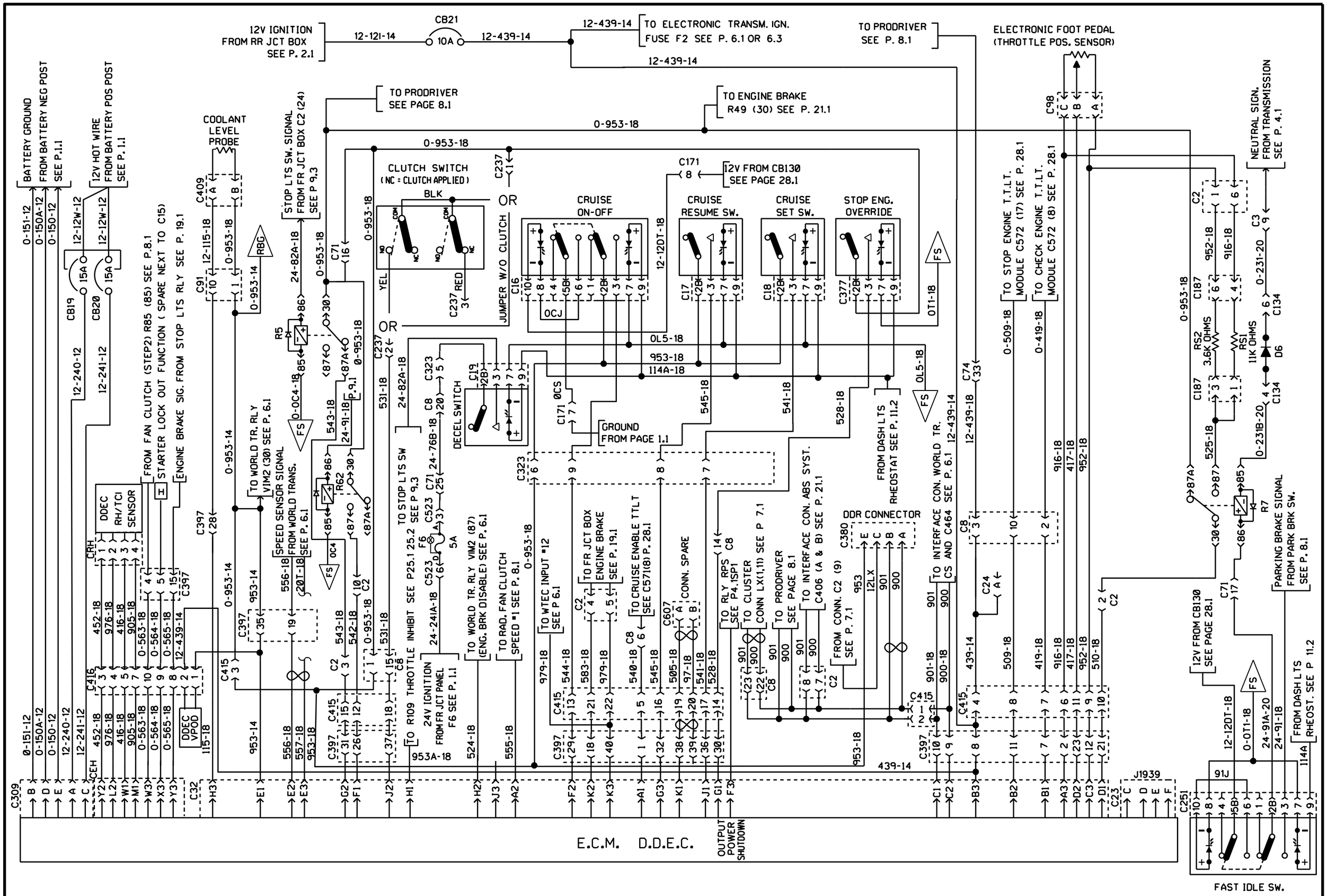

D.D.E.C. IV

PREVOST	WIRING DIAGRAM	NO: D060976	PAGE: 5.1 sp1	REVISION 00

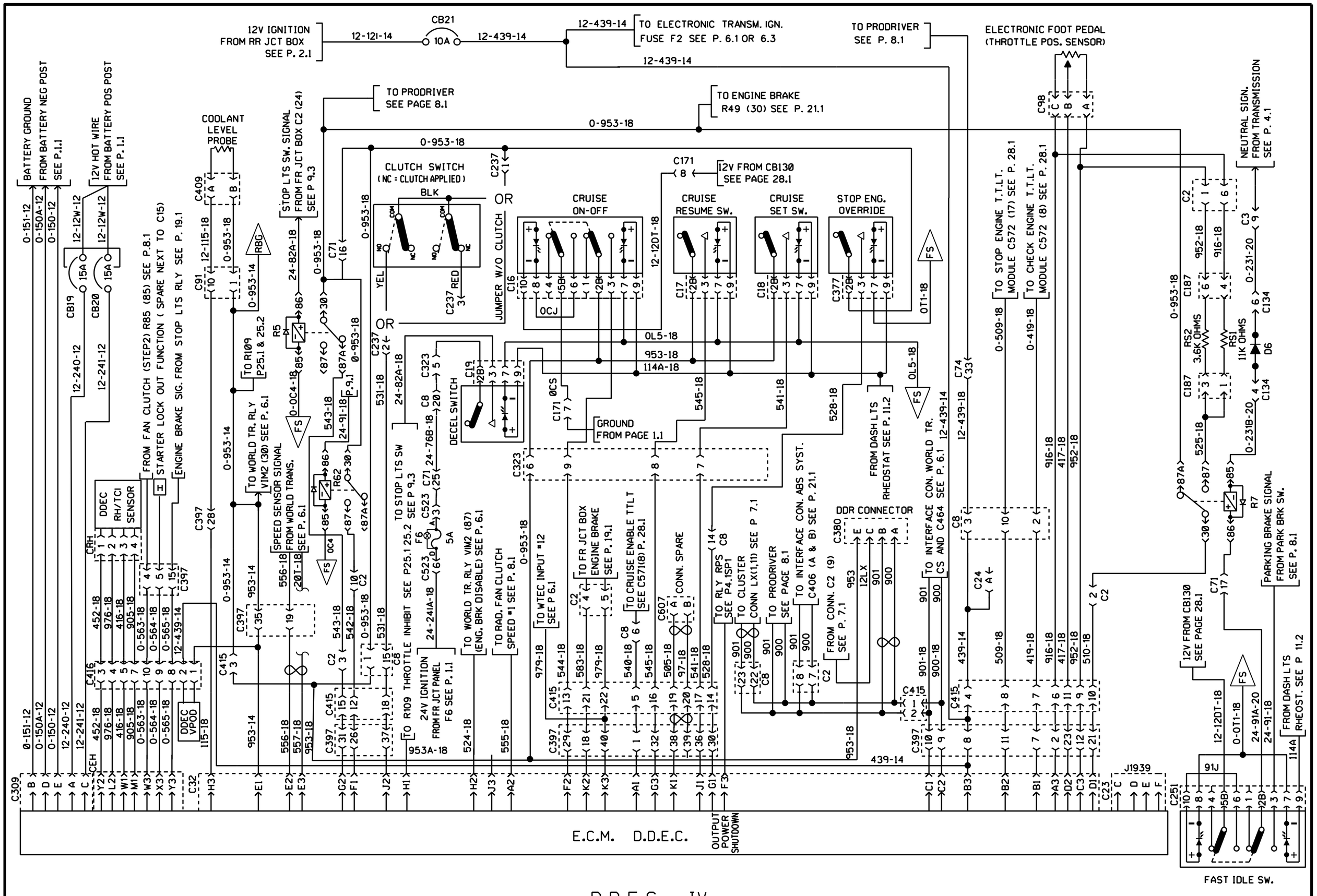

D.D.E.C. IV

PREVOST	WIRING DIAGRAM	NO: D060976	PAGE: 5.1 sp1	REVISION 02

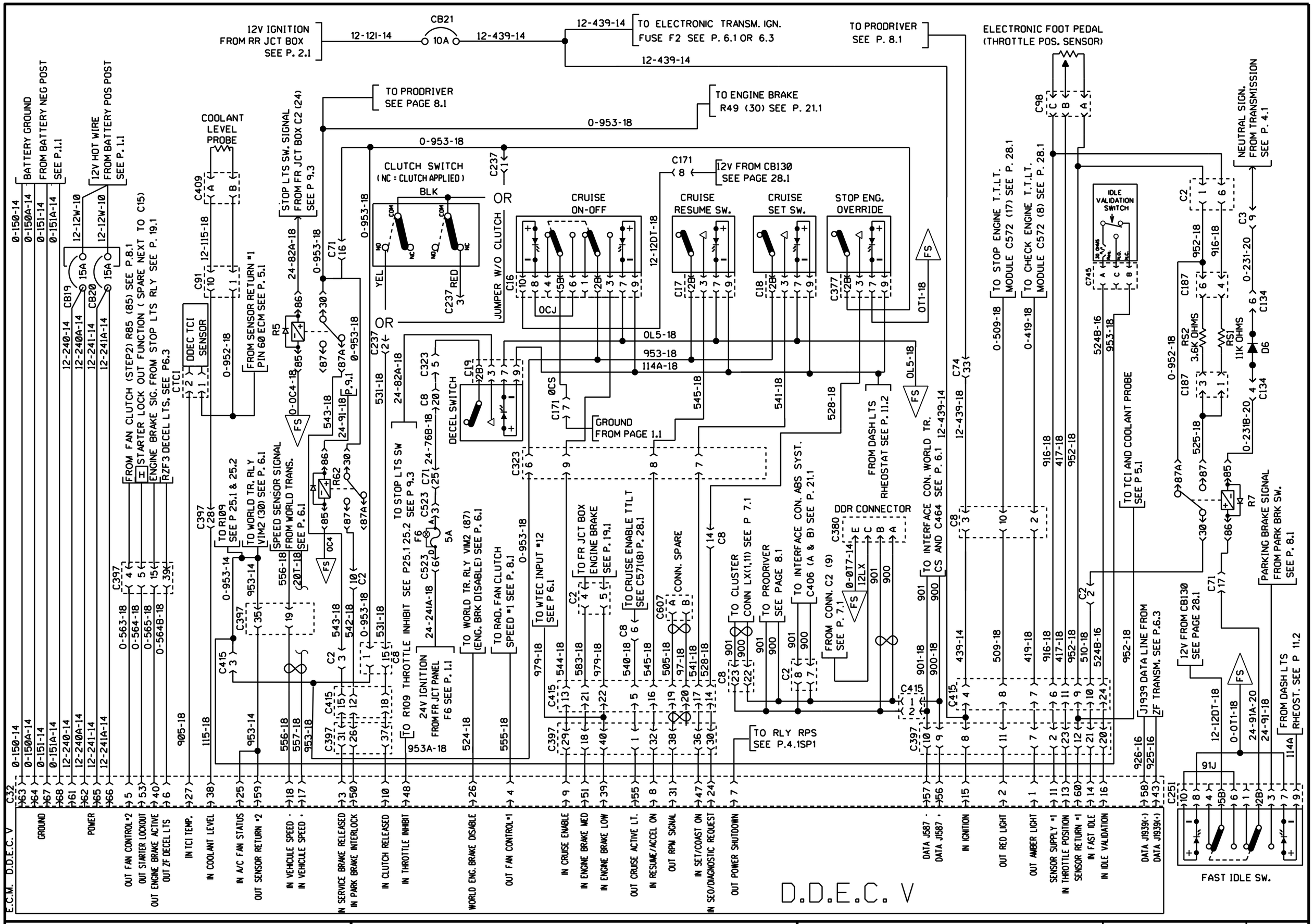

PREVOST | WIRING DIAGRAM | NO: D060976 | PAGE: 5.1sp1 | REVISION 08

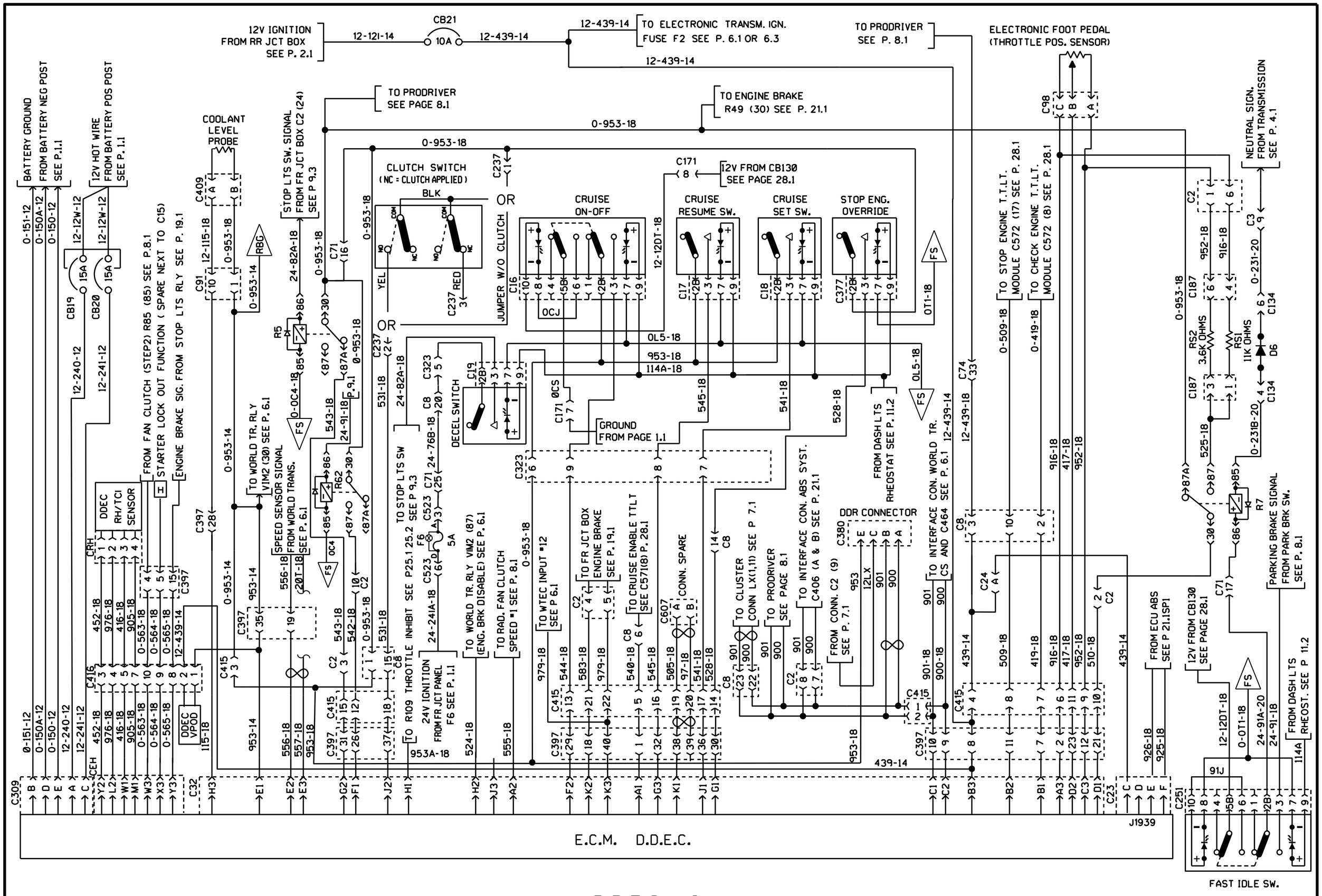

D.D.E.C. IV

PREVOST	WIRING DIAGRAM	NO: D060976	PAGE: 5.1 sp2	REVISION 00

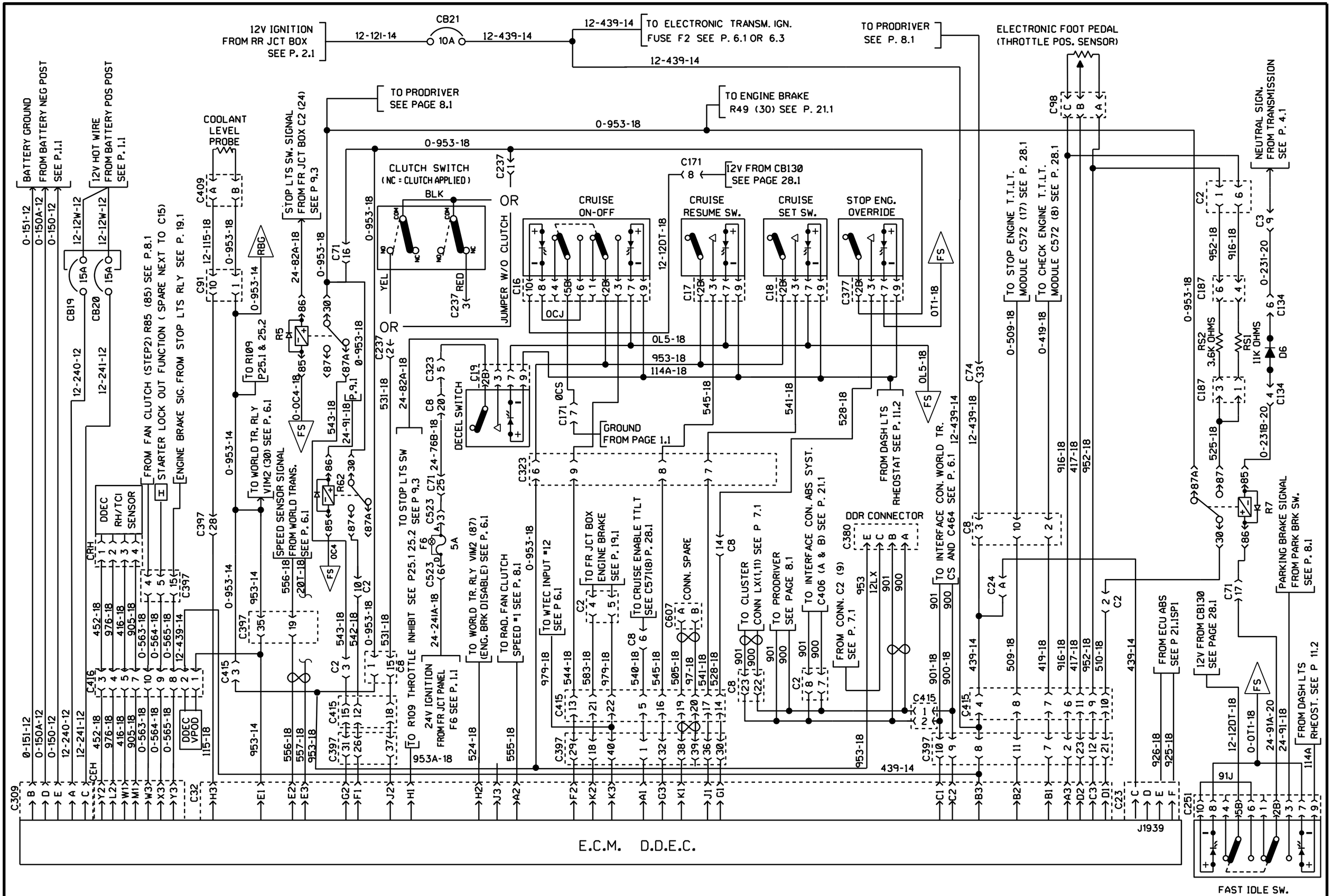
12V IGNITION FROM RR JCT BOX SEE P. 2.1
CB21 10A
TO ELECTRONIC TRANSM. IGN. FUSE F2 SEE P. 6.1 OR 6.3
TO PRODRIVER SEE P. 8.1
ELECTRONIC FOOT PEDAL (THROTTLE POS. SENSOR)
BATTERY GROUND FROM BATTERY NEG POST SEE P.1.1
12V HOT WIRE FROM BATTERY POS POST SEE P. 1.1
TO PRODRIVER SEE PAGE 8.1
TO ENGINE BRAKE R49 (30) SEE P. 21.1
COOLANT LEVEL PROBE
STOP LTS SW. SIGNAL FROM FR JCT BOX C2 (24) SEE P 9.3
CLUTCH SWITCH (NC = CLUTCH APPLIED)
JUMPER W/O CLUTCH
CRUISE ON-OFF
CRUISE RESUME SW.
CRUISE SET SW.
STOP ENG. OVERRIDE
12V FROM CB130 SEE PAGE 28.1
TO STOP ENGINE T.T.L.T. MODULE C572 (17) SEE P. 28.1
TO CHECK ENGINE T.T.L.T. MODULE C572 (8) SEE P. 28.1
NEUTRAL SIGN. FROM TRANSMISSION SEE P. 4.1
FROM FAN CLUTCH (STEP2) R85 (85) SEE P.8.1
STARTER LOCK OUT FUNCTION (SPARE NEXT TO C15)
ENGINE BRAKE SIG. FROM STOP LTS RLY SEE P. 19.1
DDEC RH/TCI SENSOR
TO WORLD TR. RLY VIM2 (30) SEE P. 6.1
SPEED SENSOR SIGNAL FROM WORLD TRANS. SEE P. 6.1
TO R109 P25.1 & 25.2
DECEL SWITCH
GROUND FROM PAGE 1.1
TO STOP LTS SW SEE P 9.3
TO FR JCT BOX ENGINE BRAKE SEE P. 19.1
TO CRUISE ENABLE TTLT SEE C571(8) P. 28.1
CONN. SPARE
TO WORLD TR. RLY VIM2 (87) (ENG. BRK DISABLE) SEE P. 6.1
TO RAD. FAN CLUTCH SPEED #1 SEE P. 8.1
TO WTEC INPUT #12 SEE P 6.1
TO INTERFACE CON. ABS SYST. C406 (A & B) SEE P. 21.1
TO CLUSTER CONN LX(1,11) SEE P 7.1
TO PRODRIVER SEE PAGE 8.1
FROM CONN. C2 (9) SEE P. 7.1
DDR CONNECTOR
FROM DASH LTS RHEOSTAT SEE P. 11.2
TO INTERFACE CON. WORLD TR. C464 SEE P. 6.1
TO INTERFACE CON. CS AND C464
FROM ECU ABS SEE P 21.1SP1
12V FROM CB130 SEE PAGE 28.1
PARKING BRAKE SIGNAL FROM PARK BRK SW. SEE P. 8.1
FROM DASH LTS RHEOST. SEE P 11.2
TO R109 THROTTLE INHIBIT SEE P25.1 25.2
24V IGNITION FROM FR JCT PANEL F6 SEE P. 1.1
DDEC VPOD
E.C.M. D.D.E.C.
J1939
FAST IDLE SW.
D.D.E.C. IV

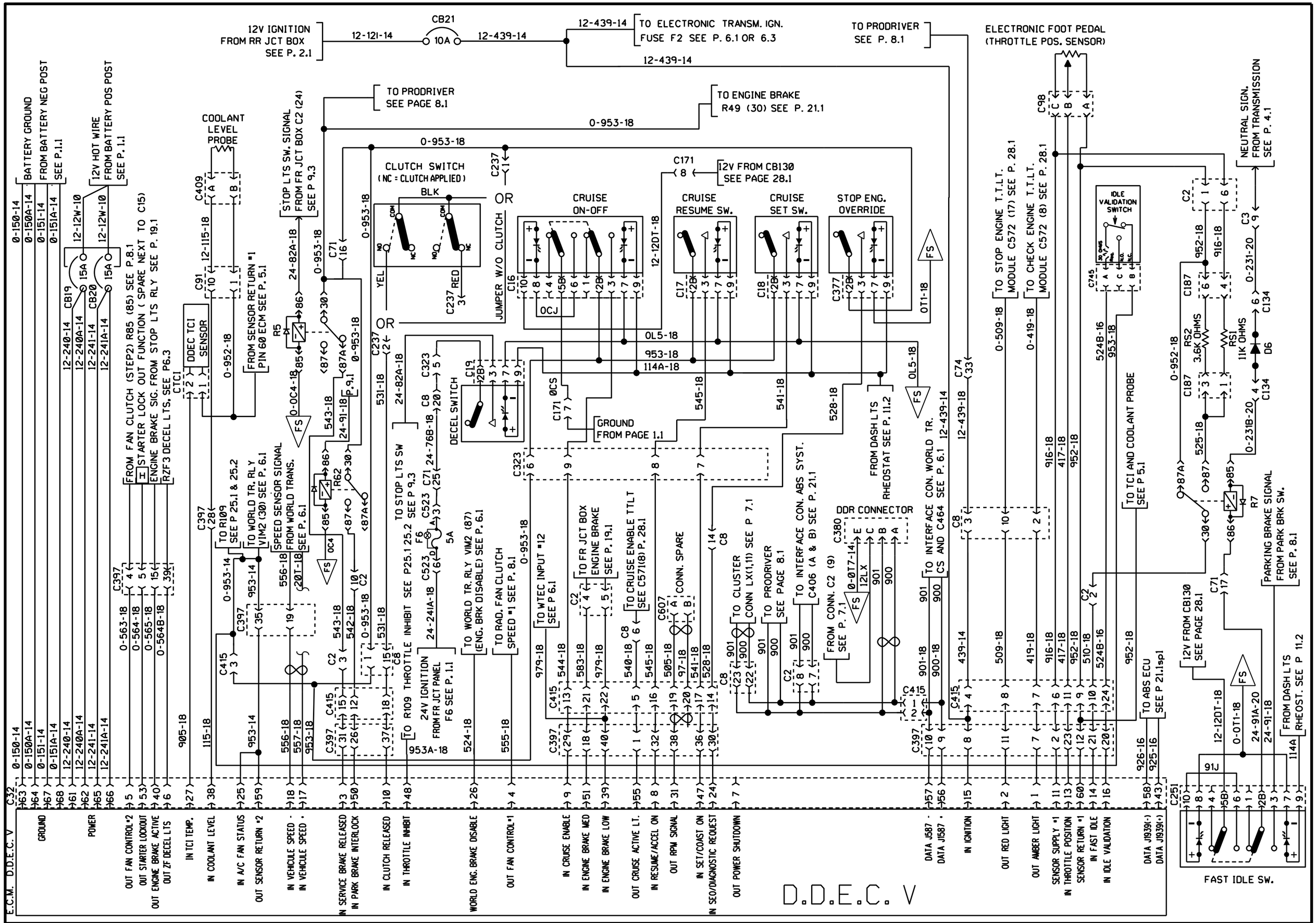

PREVOST | WIRING DIAGRAM | NO: D060976 | PAGE: 5.1sp2 | REVISION 08

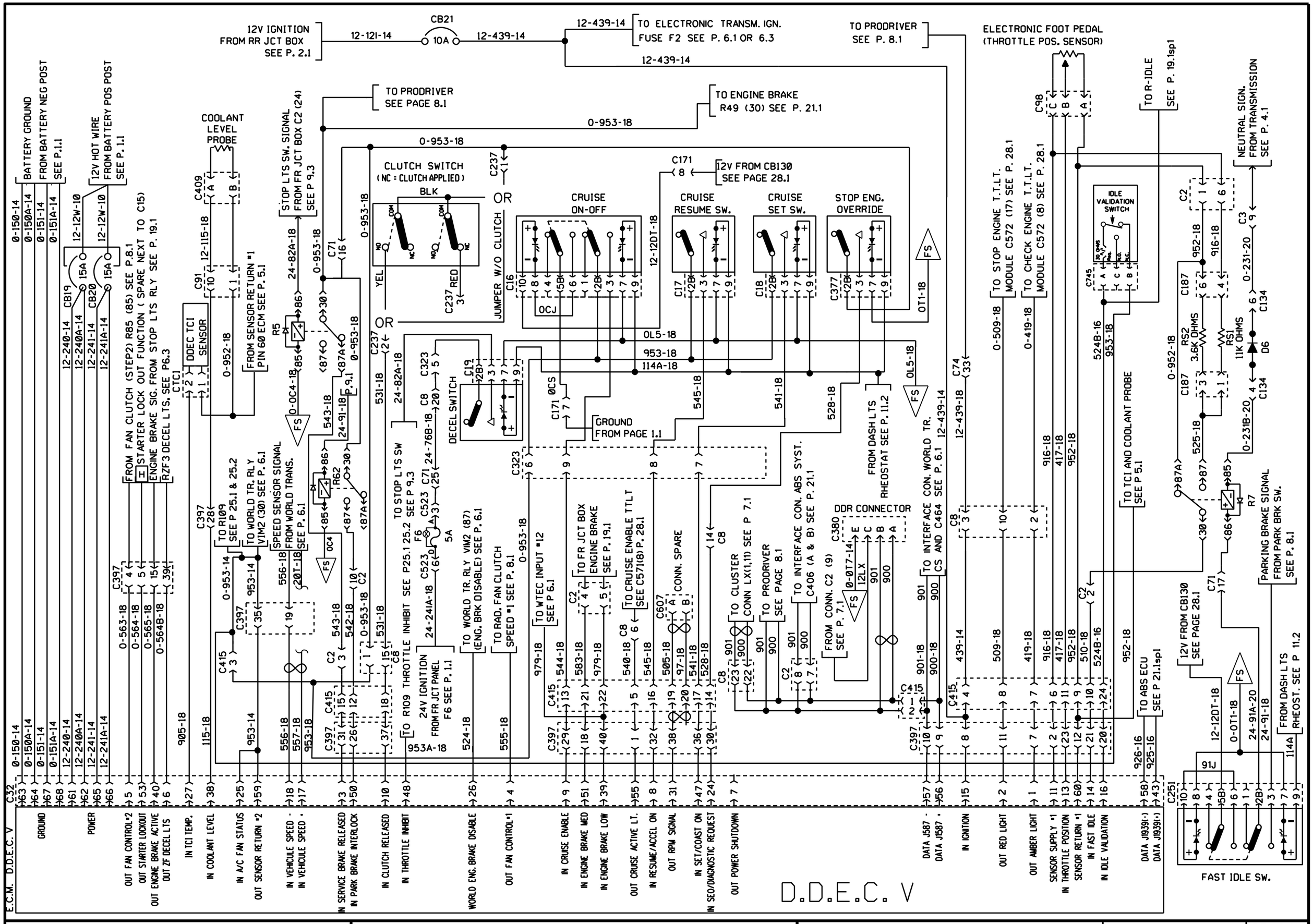

PREVOST | WIRING DIAGRAM | NO: D060976 | PAGE: 5.1sp3 | REVISION 15

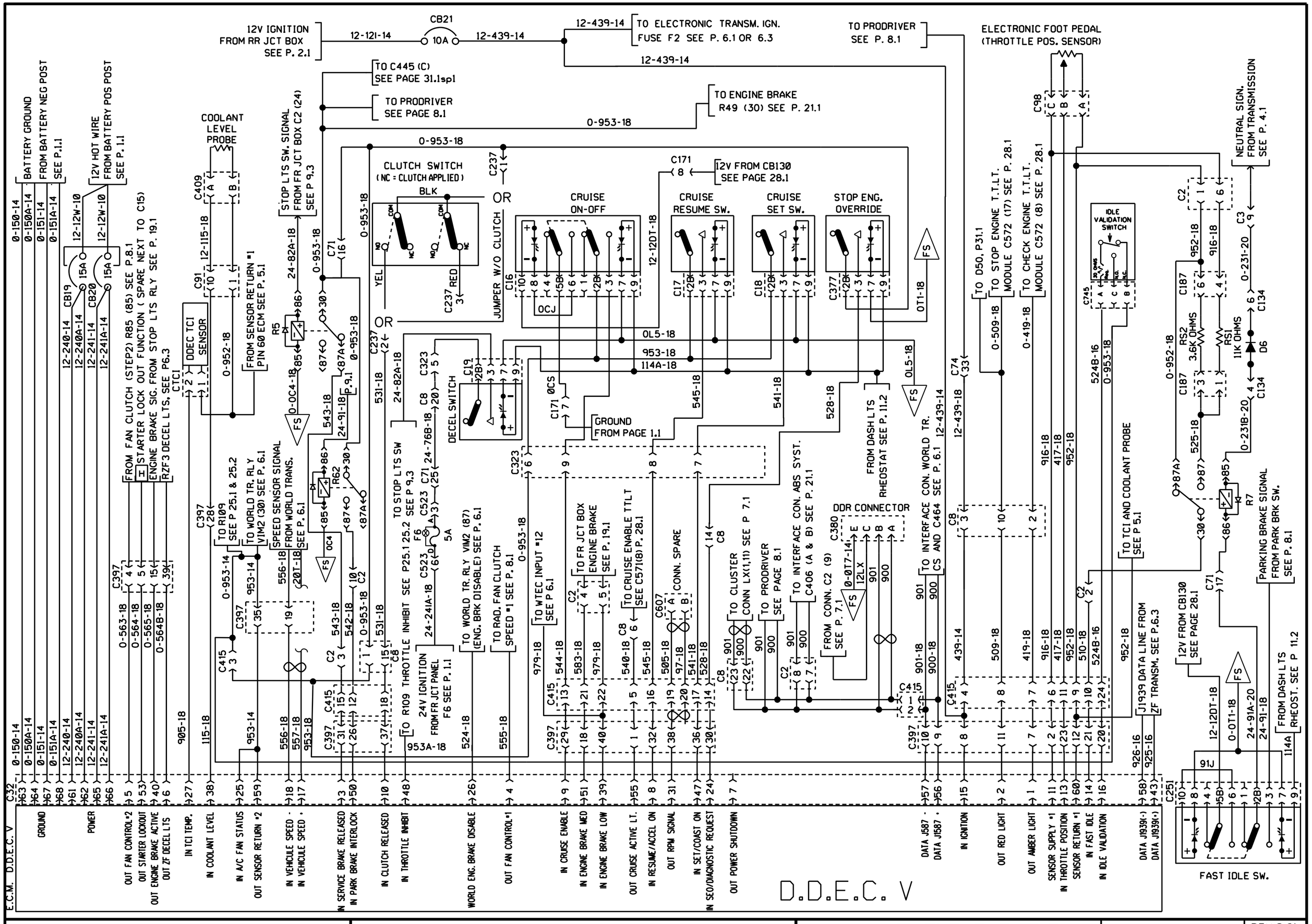

PREVOST | WIRING DIAGRAM | NO: D060976 | PAGE: 5.1sp4 | REVISION 00

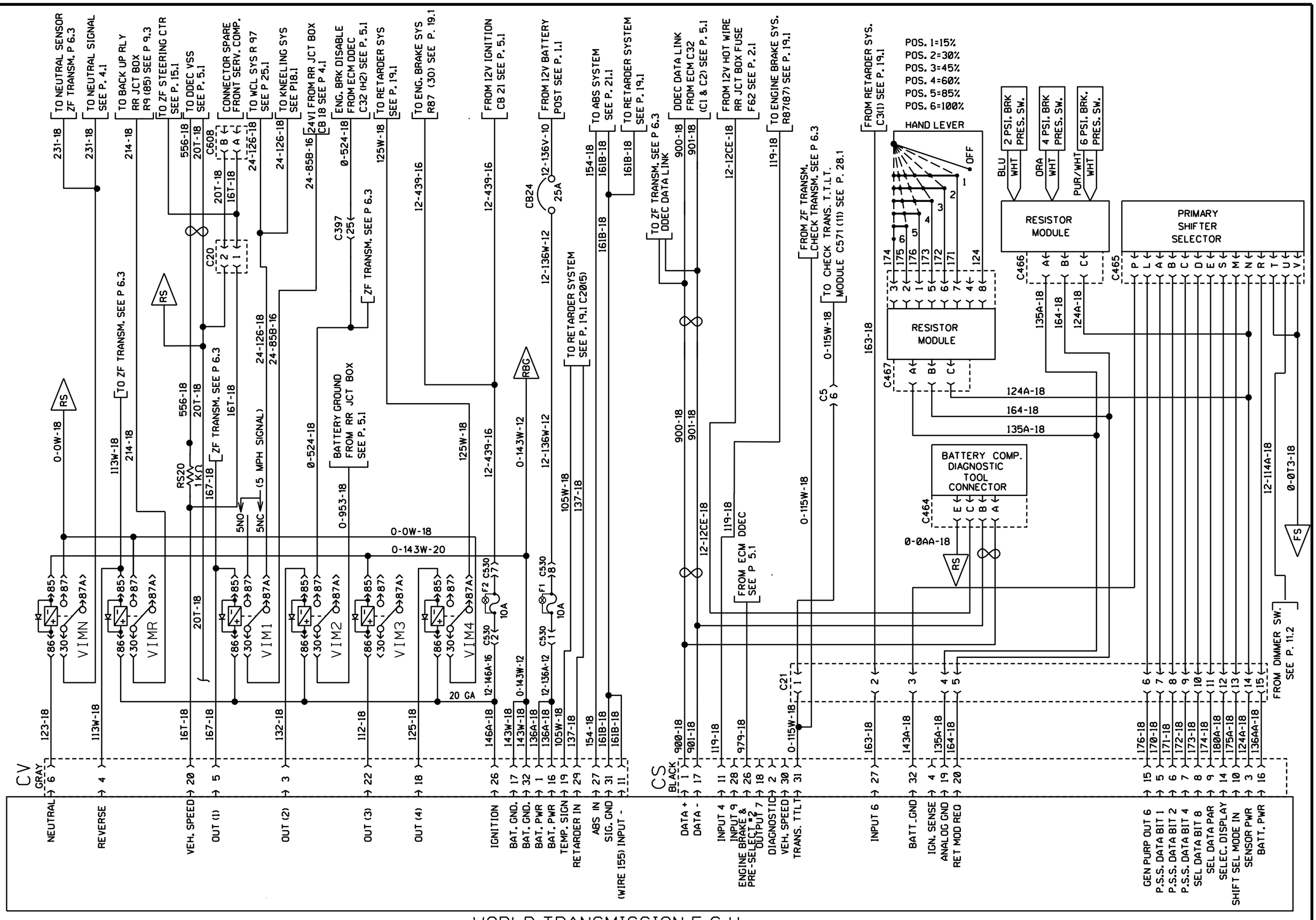

WORLD TRANSMISSION E.C.U.

PREVOST	WIRING DIAGRAM	NO: D060976	PAGE: 6.1	REVISION 00

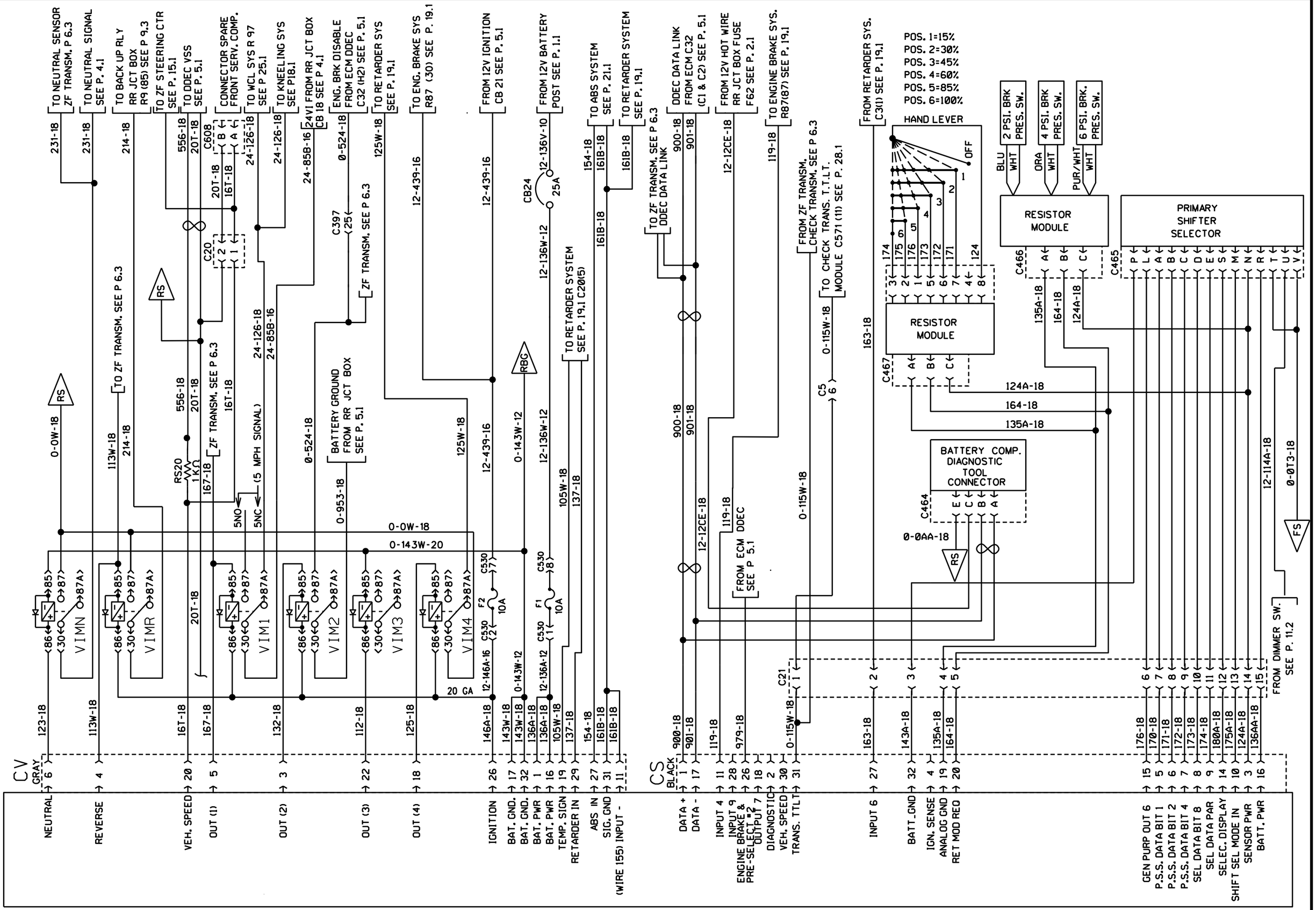

WORLD TRANSMISSION E.C.U.

PREVOST	WIRING DIAGRAM	NO: D060976	PAGE: 6.1	REVISION 04

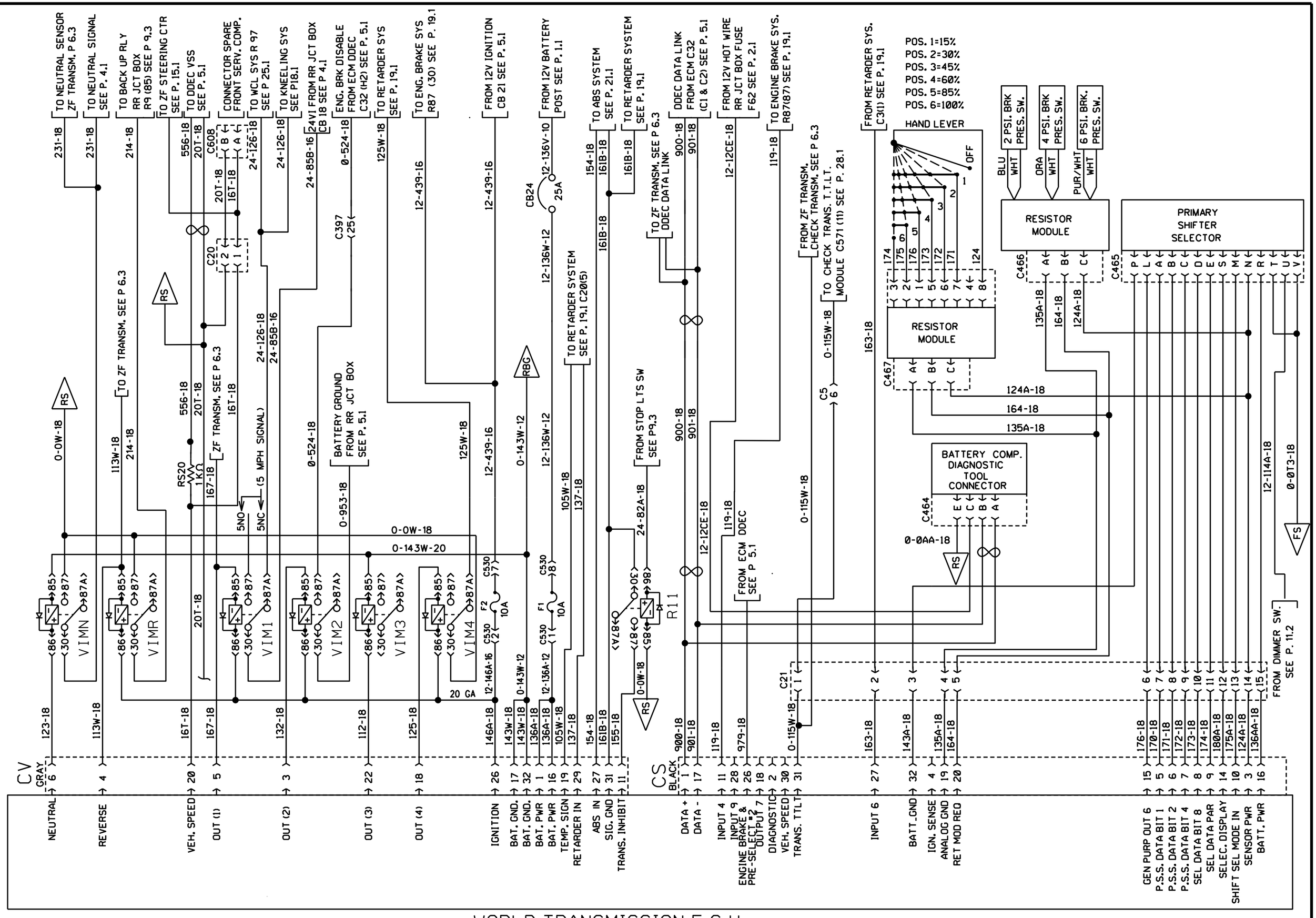

WORLD TRANSMISSION E.C.U.

PREVOST	WIRING DIAGRAM	NO: D060976	PAGE: 6.1	REVISION 08

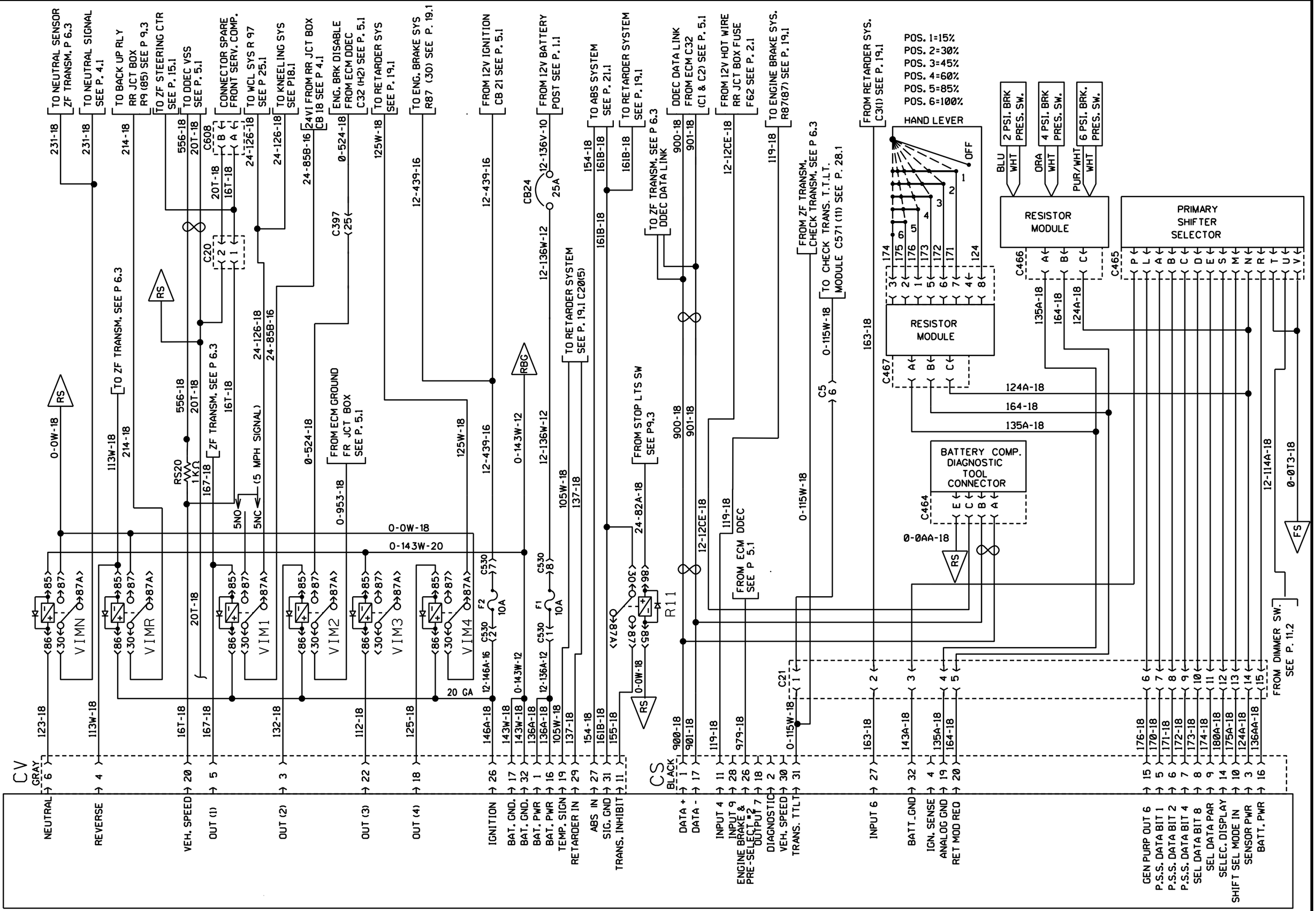

WORLD TRANSMISSION E.C.U.

PREVOST	WIRING DIAGRAM	NO: D060976	PAGE: 6.1	REVISION 10

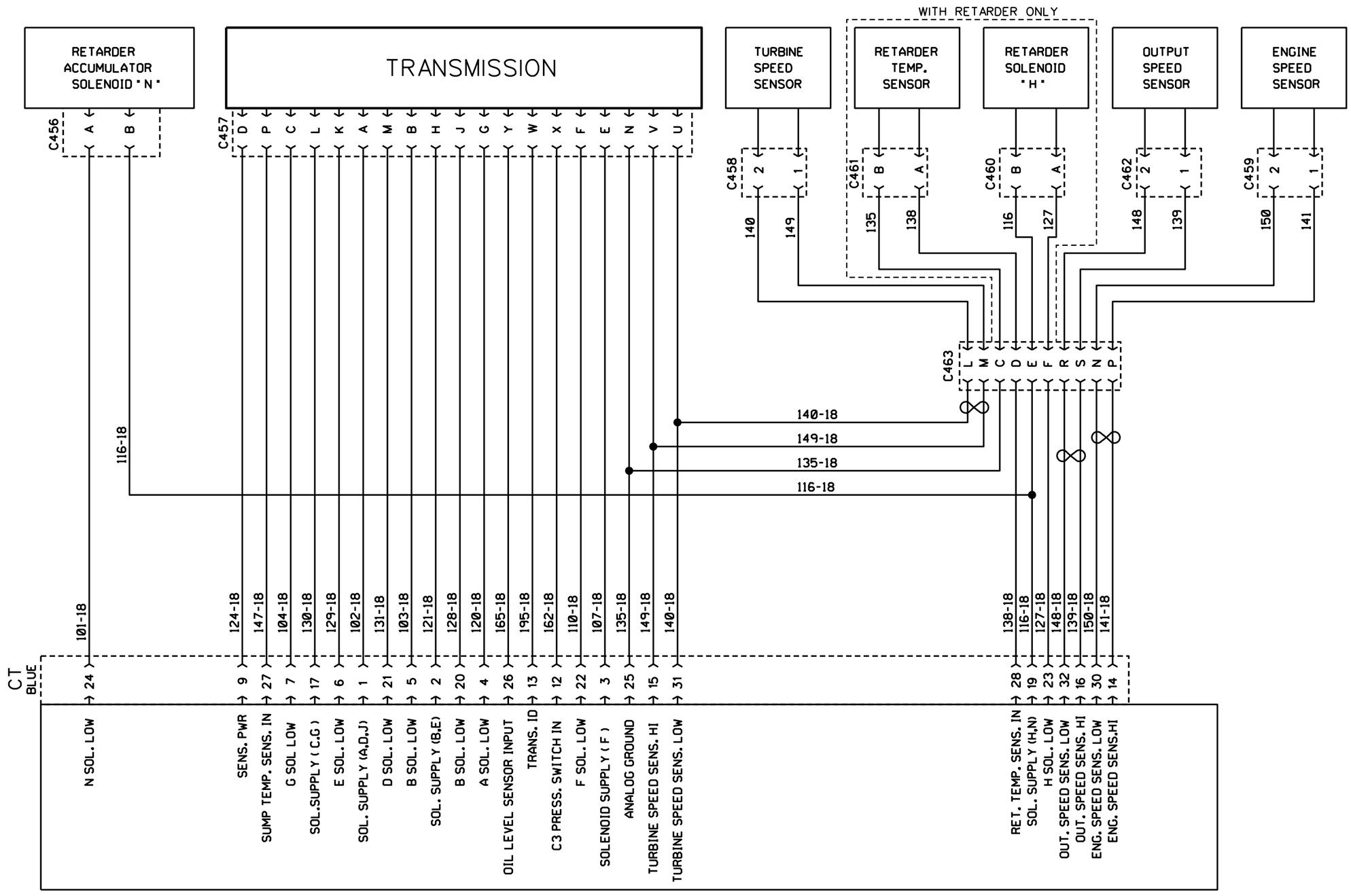

WORLD TRANSMISSION E.C.U. (SUITE)

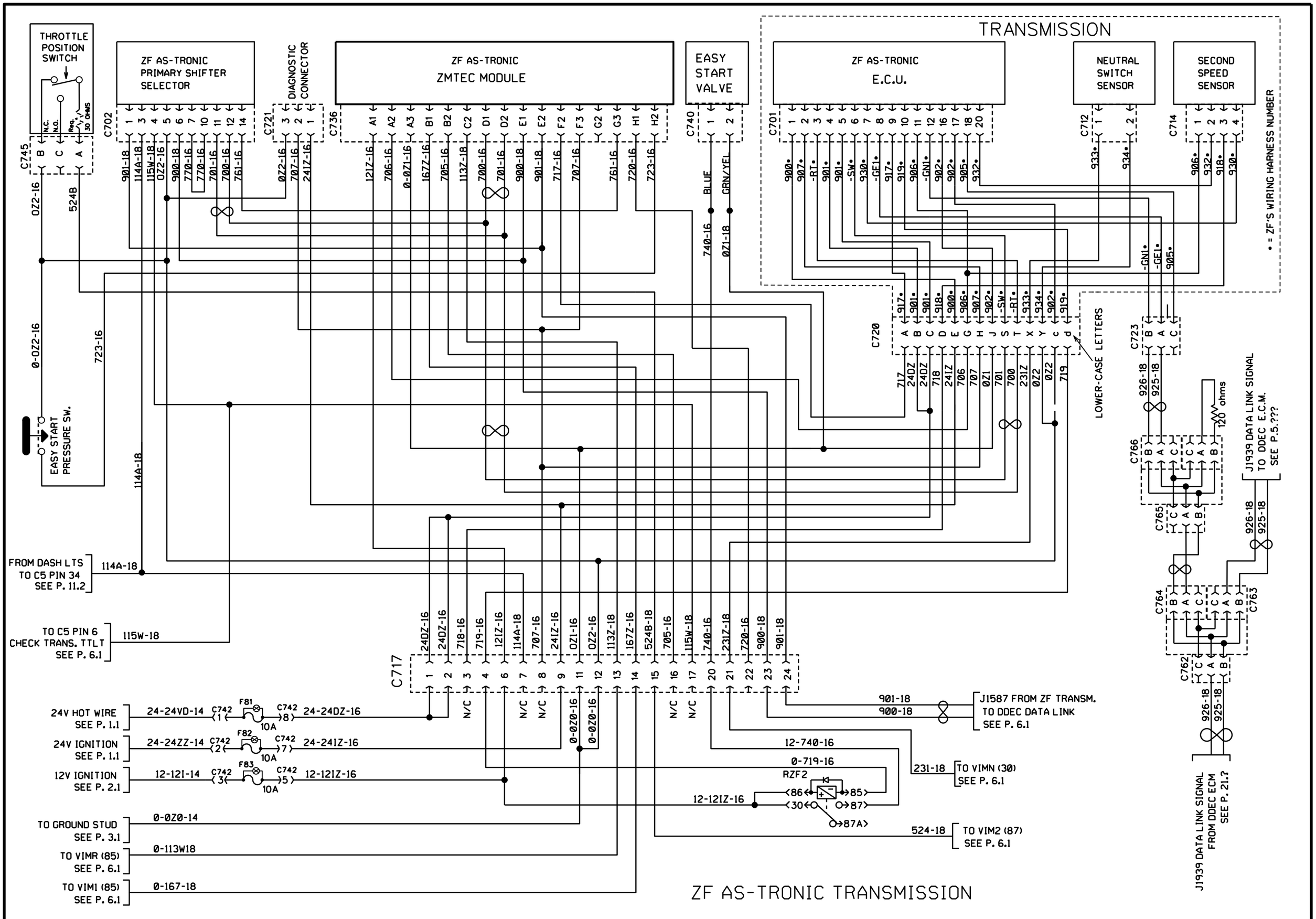

PREVOST	WIRING DIAGRAM	NO: D060976	PAGE: 6.3	REVISION 00

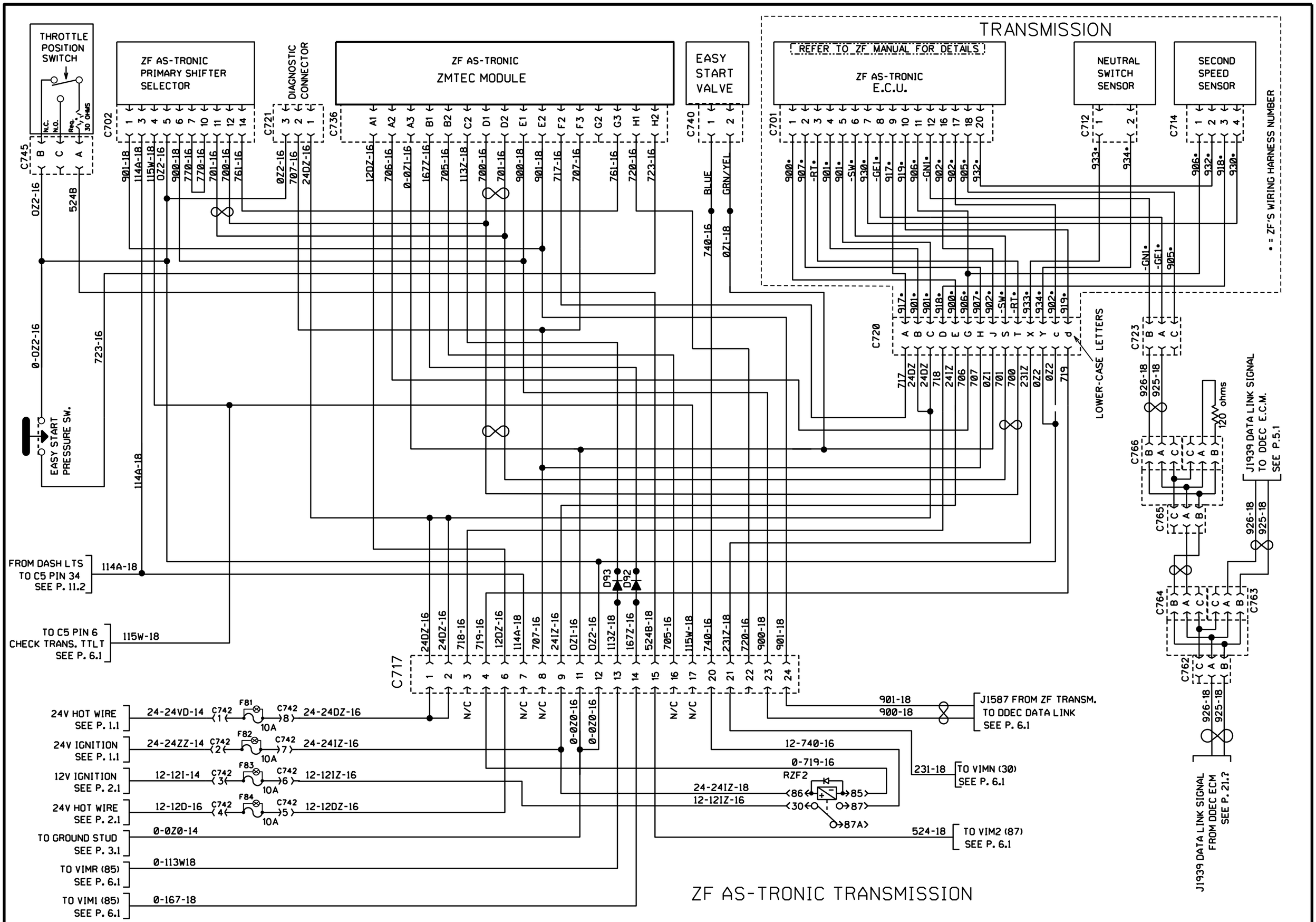

PREVOST	WIRING DIAGRAM	NO: D060976	PAGE: 6.3	REVISION 01

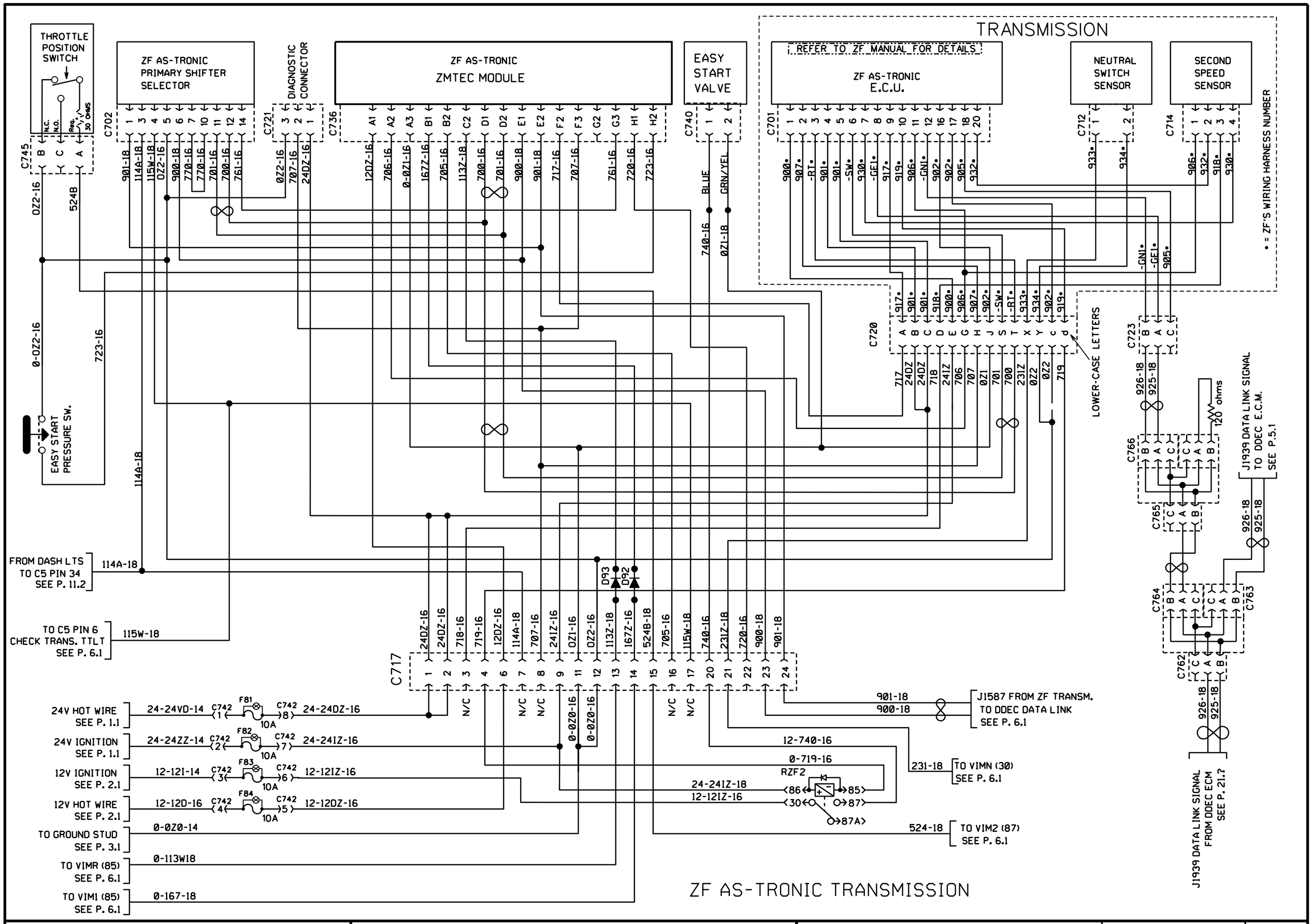
THROTTLE POSITION SWITCH
ZF AS-TRONIC PRIMARY SHIFTER SELECTOR
DIAGNOSTIC CONNECTOR
ZF AS-TRONIC ZMTEC MODULE
EASY START VALVE
TRANSMISSION
REFER TO ZF MANUAL FOR DETAILS
ZF AS-TRONIC E.C.U.
NEUTRAL SWITCH SENSOR
SECOND SPEED SENSOR
• = ZF'S WIRING HARNESS NUMBER
LOWER-CASE LETTERS
EASY START PRESSURE SW.
FROM DASH LTS TO C5 PIN 34 SEE P. 11.2
TO C5 PIN 6 CHECK TRANS. TTLT SEE P. 6.1
J1939 DATA LINK SIGNAL TO DDEC E.C.M. SEE P. 5.1
J1939 DATA LINK SIGNAL FROM DDEC ECM SEE P. 21.2
J1587 FROM ZF TRANSM. TO DDEC DATA LINK SEE P. 6.1
TO VIMN (30) SEE P. 6.1
TO VIM2 (87) SEE P. 6.1
24V HOT WIRE SEE P. 1.1
24V IGNITION SEE P. 1.1
12V IGNITION SEE P. 2.1
12V HOT WIRE SEE P. 2.1
TO GROUND STUD SEE P. 3.1
TO VIMR (85) SEE P. 6.1
TO VIM1 (85) SEE P. 6.1
ZF AS-TRONIC TRANSMISSION

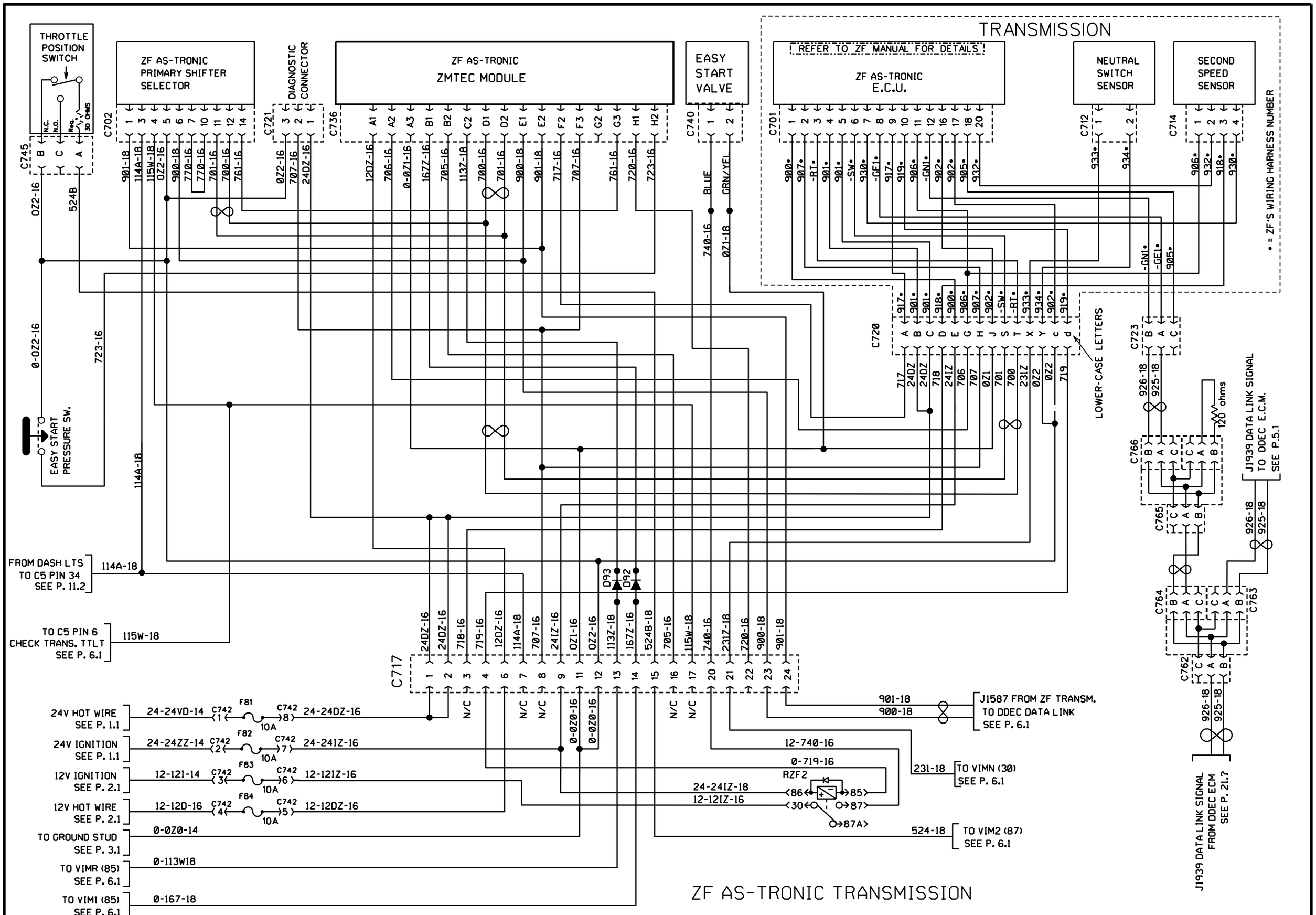

PREVOST	WIRING DIAGRAM	NO: D060976	PAGE: 6.3	REVISION 04

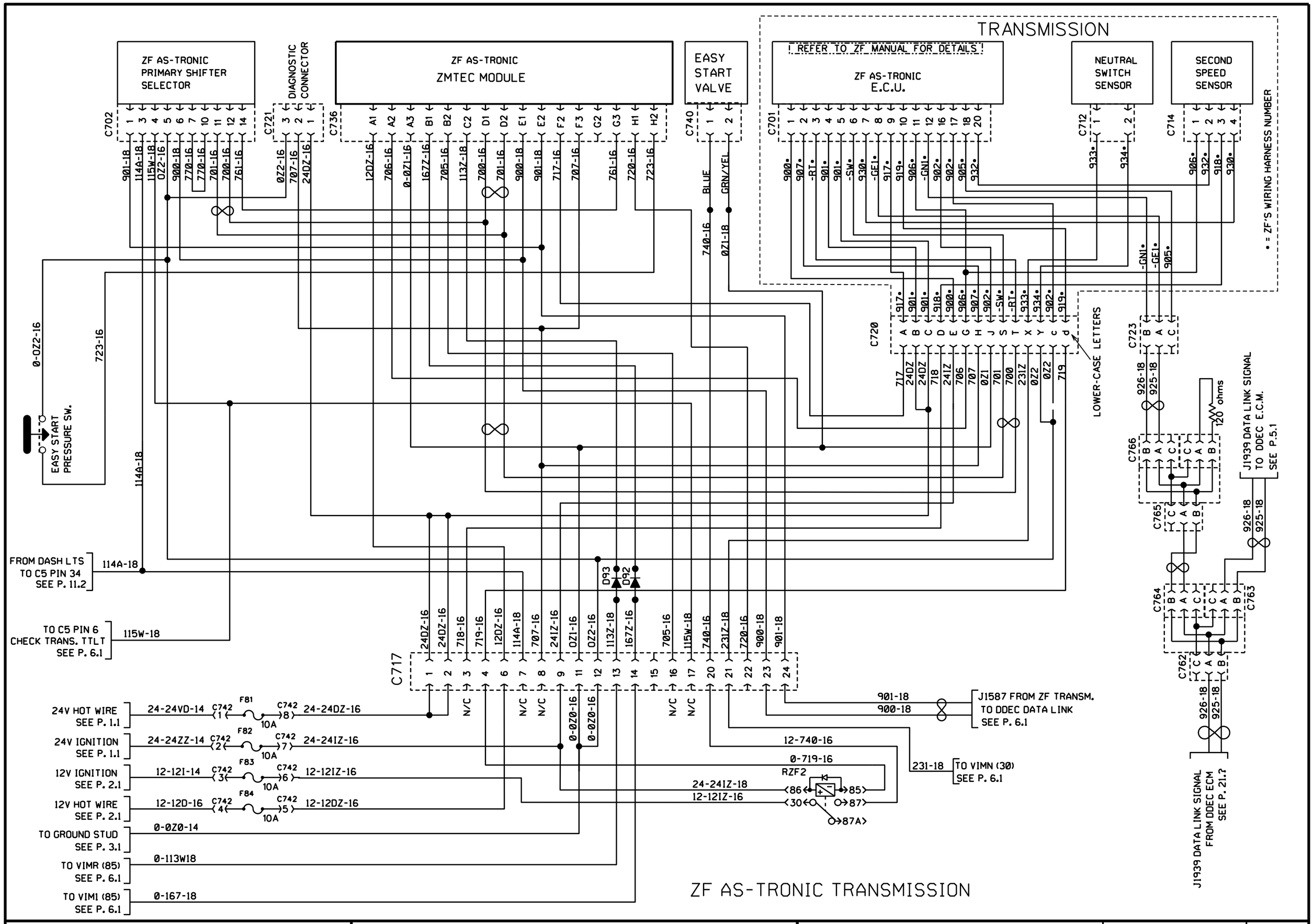

PREVOST	WIRING DIAGRAM	NO: D060976	PAGE: 6.3	REVISION 08

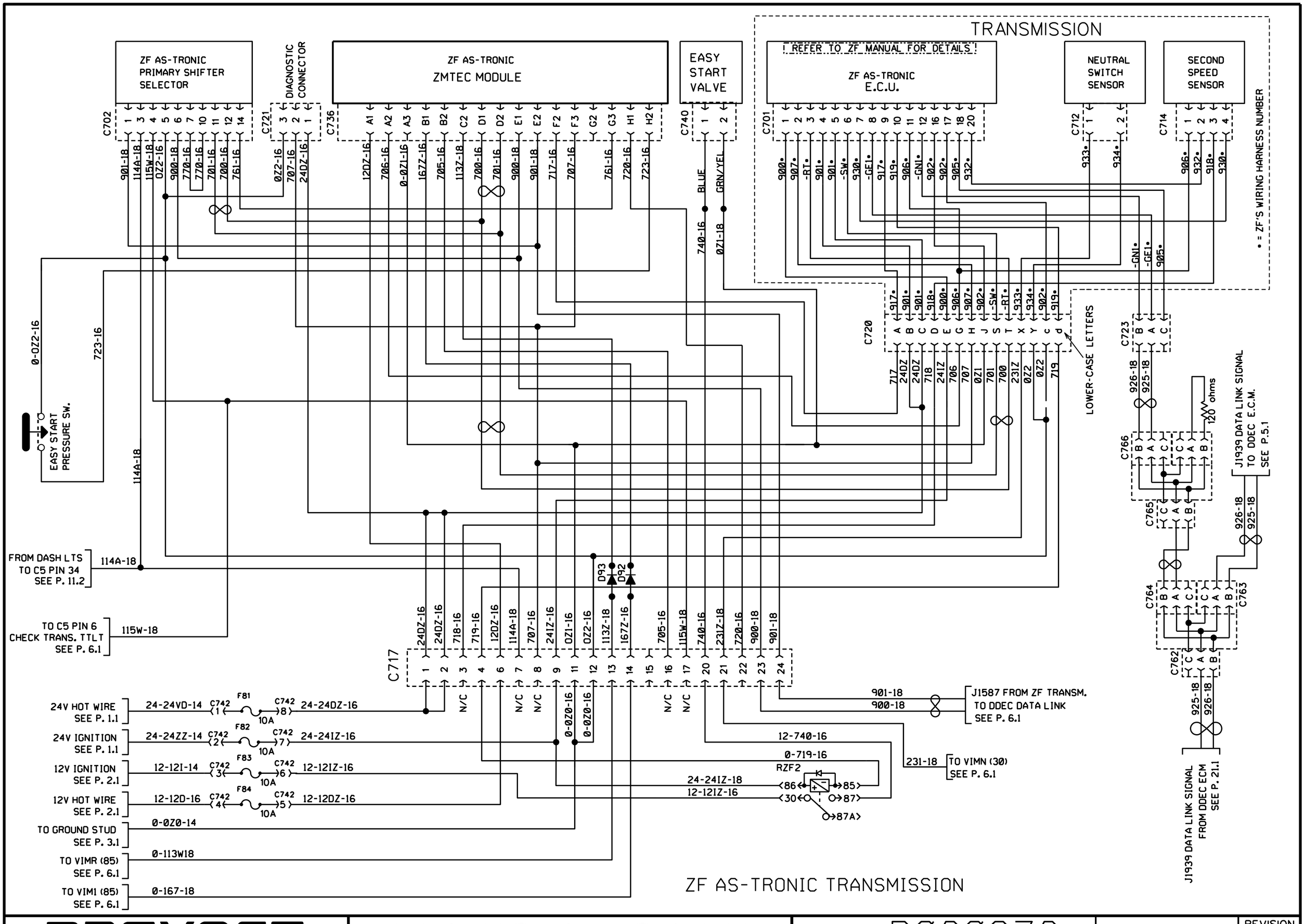
TRANSMISSION
ZF AS-TRONIC PRIMARY SHIFTER SELECTOR
DIAGNOSTIC CONNECTOR
ZF AS-TRONIC ZMTEC MODULE
EASY START VALVE
REFER TO ZF MANUAL FOR DETAILS
ZF AS-TRONIC E.C.U.
NEUTRAL SWITCH SENSOR
SECOND SPEED SENSOR
• = ZF'S WIRING HARNESS NUMBER
LOWER-CASE LETTERS
EASY START PRESSURE SW.
FROM DASH LTS TO C5 PIN 34 SEE P. 11.2
TO C5 PIN 6 CHECK TRANS. TTLT SEE P. 6.1
24V HOT WIRE SEE P. 1.1
24V IGNITION SEE P. 1.1
12V IGNITION SEE P. 2.1
12V HOT WIRE SEE P. 2.1
TO GROUND STUD SEE P. 3.1
TO VIMR (85) SEE P. 6.1
TO VIMI (85) SEE P. 6.1
J1587 FROM ZF TRANSM. TO DDEC DATA LINK SEE P. 6.1
TO VIMN (30) SEE P. 6.1
J1939 DATA LINK SIGNAL TO DDEC E.C.M. SEE P. 5.1
J1939 DATA LINK SIGNAL FROM DDEC ECM SEE P. 21.1
120 ohms
RZF2
ZF AS-TRONIC TRANSMISSION

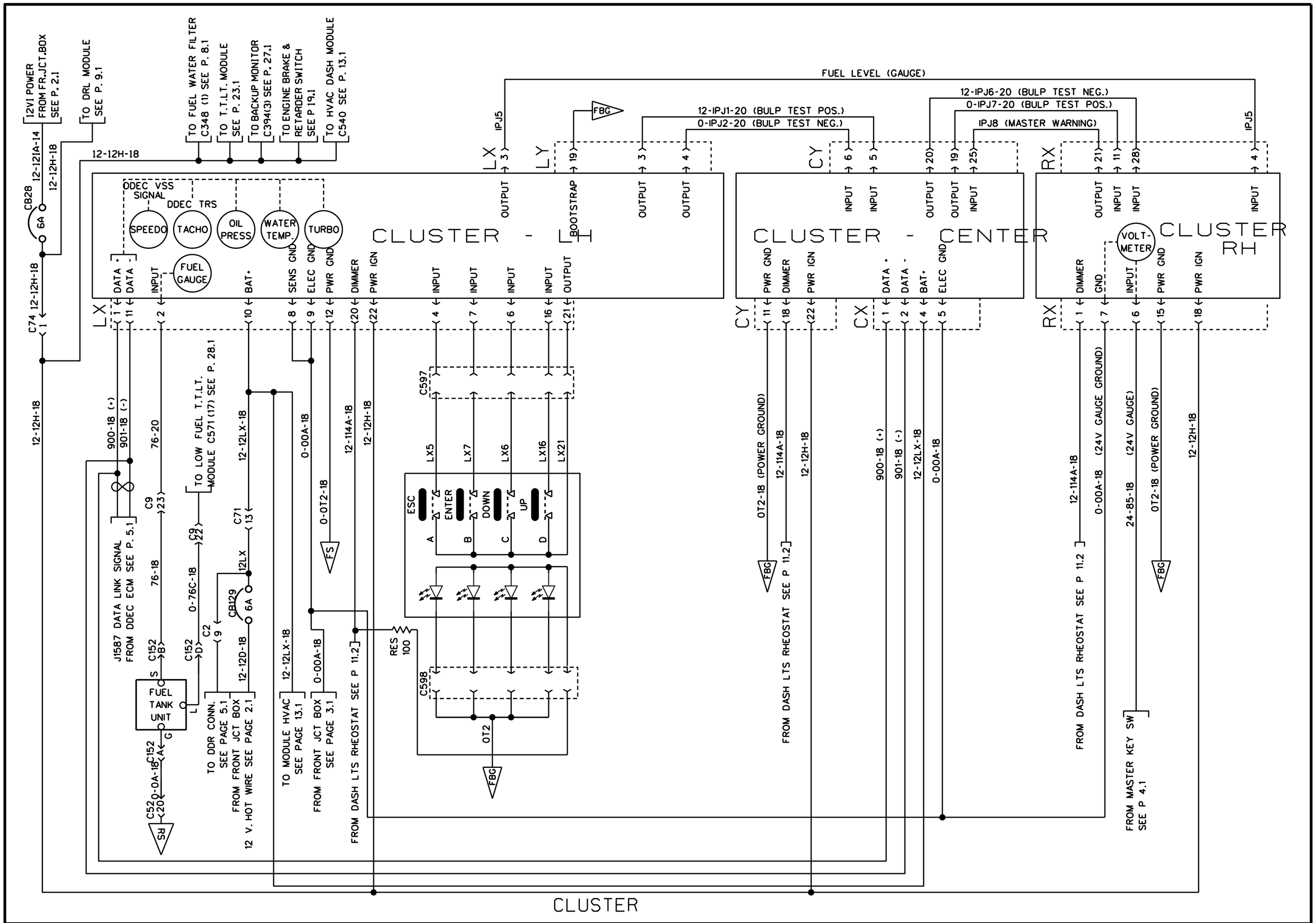

PREVOST	WIRING DIAGRAM	NO: D060976	PAGE: 7.1	REVISION 00

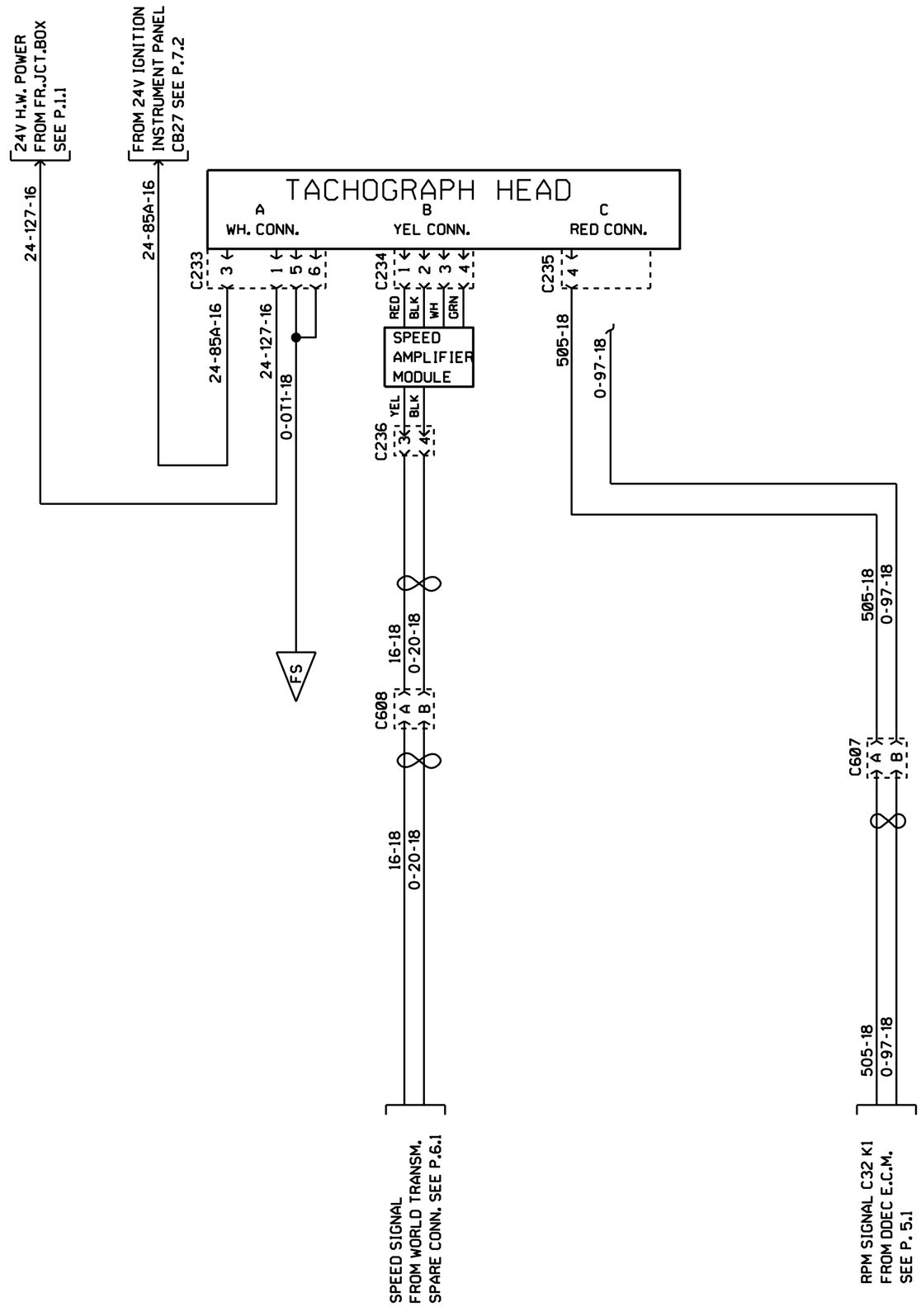

ELECTRONIC TACHOGRAPH

PREVOST	WIRING DIAGRAM	NO: D060976	PAGE: 7.1SP1	REVISION 00

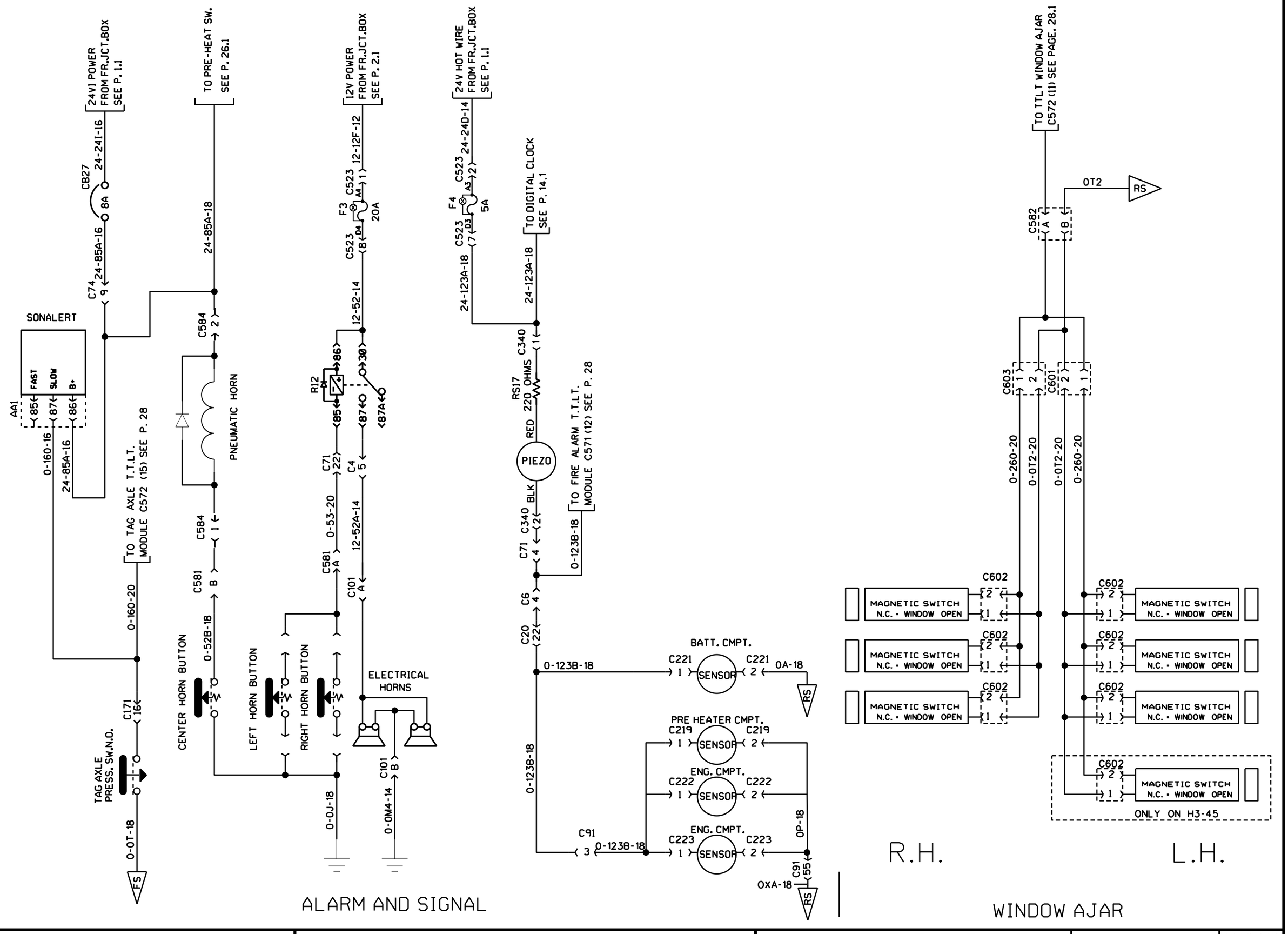

PREVOST	WIRING DIAGRAM	NO: D060976	PAGE: 7.2	REVISION 00

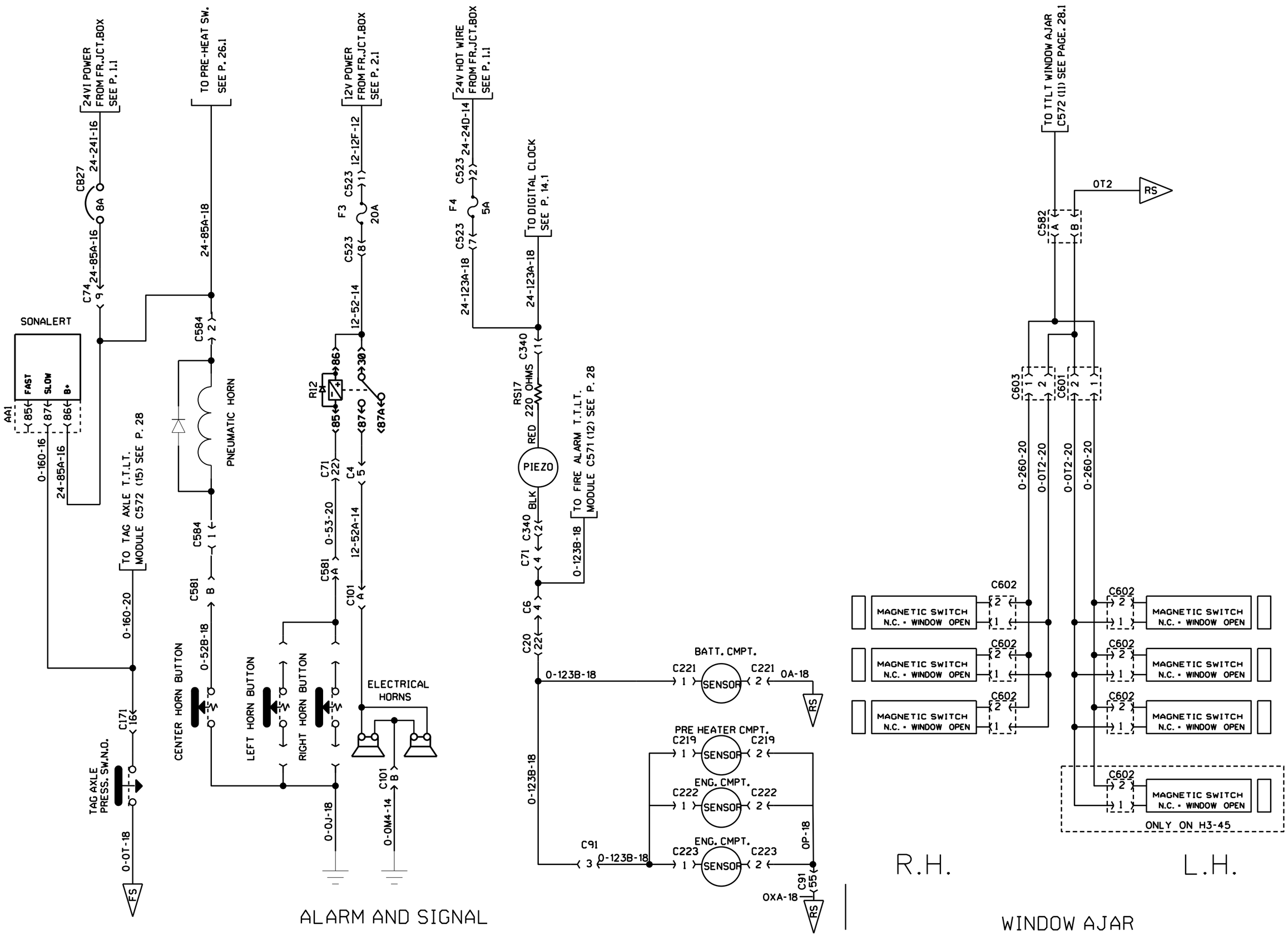

PREVOST	WIRING DIAGRAM	NO: D060976	PAGE: 7.2	REVISION 04

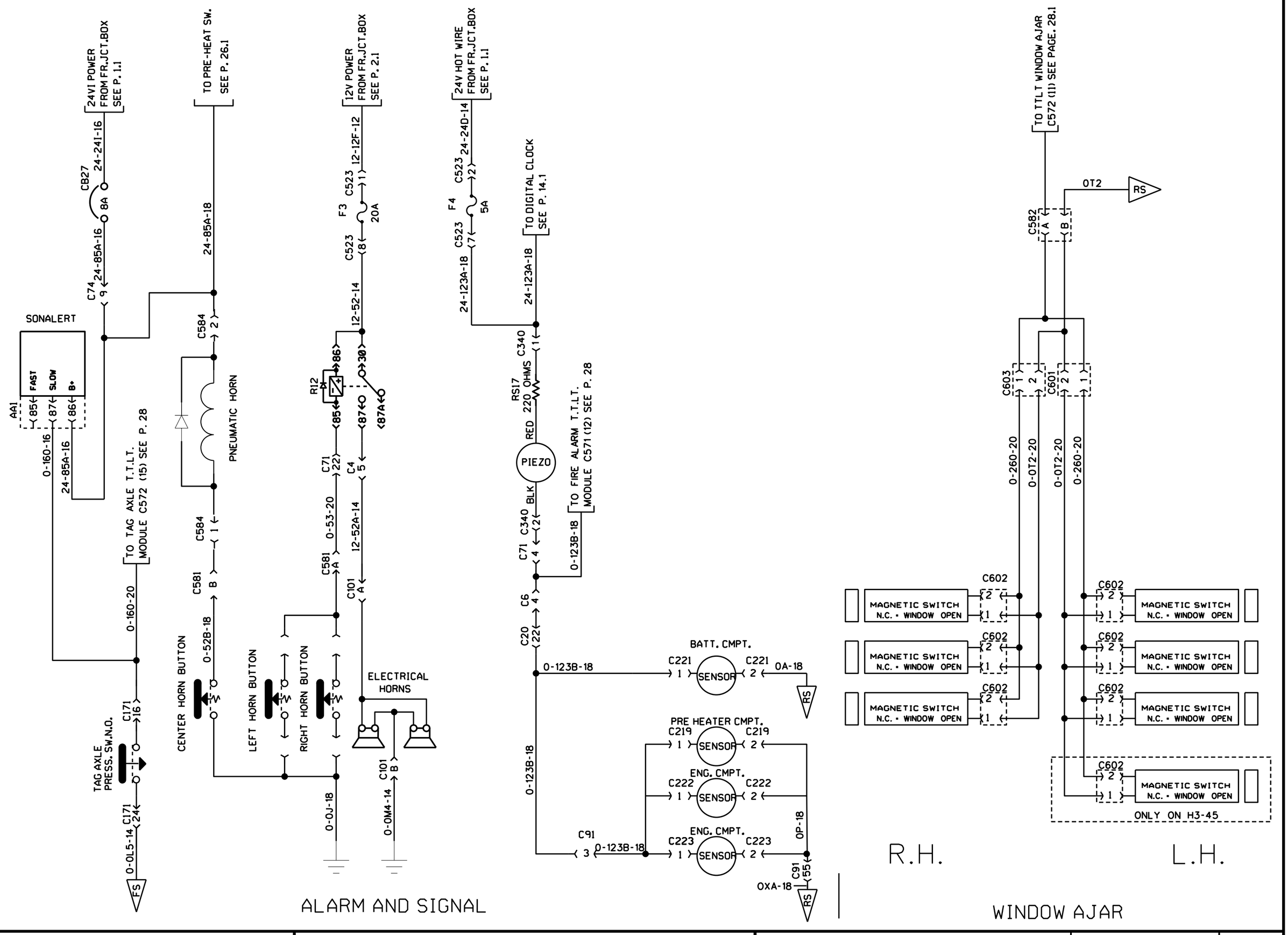
24V1 POWER FROM FR.JCT.BOX SEE P. 1.1
TO PRE-HEAT SW. SEE P. 26.1
12V POWER FROM FR.JCT.BOX SEE P. 2.1
24V HOT WIRE FROM FR.JCT.BOX SEE P. 1.1
TO DIGITAL CLOCK SEE P. 14.1
TO TILT WINDOW AJAR C572 (11) SEE PAGE. 28.1
SONALERT
FAST
SLOW
B+
PNEUMATIC HORN
TO TAG AXLE MODULE C572 (15) SEE P. 28
TO FIRE ALARM T.T.L.T. MODULE C571 (12) SEE P. 28
PIEZO
RS17 220 OHMS
CENTER HORN BUTTON
LEFT HORN BUTTON
RIGHT HORN BUTTON
ELECTRICAL HORNS
TAG AXLE PRESS. SW.N.O.
BATT. CMPT.
PRE HEATER CMPT.
ENG. CMPT.
SENSOR
MAGNETIC SWITCH N.C. - WINDOW OPEN
ONLY ON H3-45
R.H.
L.H.
ALARM AND SIGNAL
WINDOW AJAR

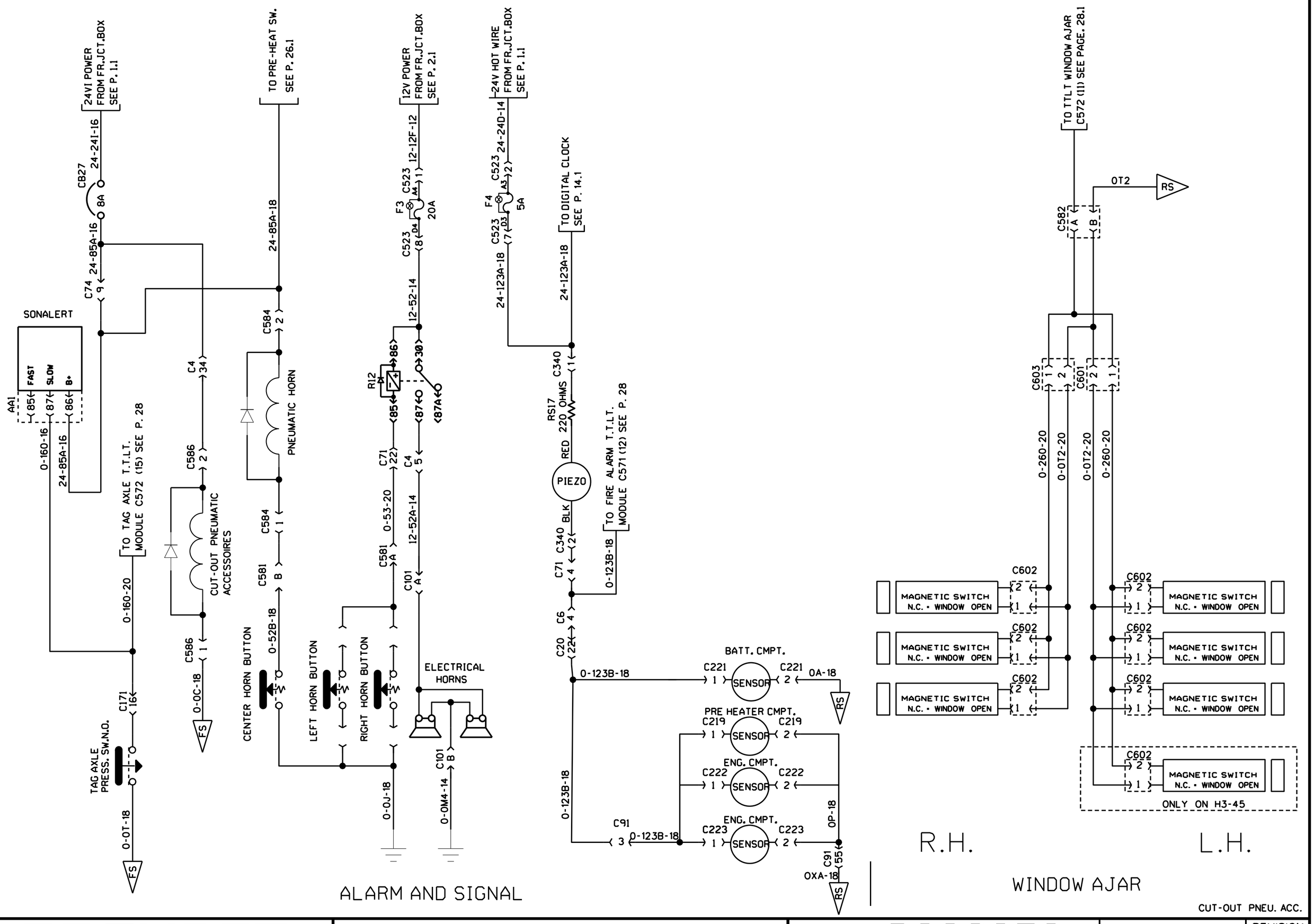
24VI POWER FROM FR.JCT.BOX SEE P. 1.1
24-24I-16
CB27
8A
24-85A-16
C74
9
TO PRE-HEAT SW. SEE P. 26.1
24-85A-18
C584
2
SONALERT
AA1
FAST
SLOW
B+
85
87
86
0-160-16
24-85A-16
TO TAG AXLE T.T.L.T. MODULE C572 (15) SEE P. 28
0-160-20
C4
34
C586
2
CUT-OUT PNEUMATIC ACCESSOIRES
PNEUMATIC HORN
C584
1
C581
B
0-52B-18
CENTER HORN BUTTON
LEFT HORN BUTTON
RIGHT HORN BUTTON
C586
1
0-0C-18
FS
C171
16
TAG AXLE PRESS. SW.N.O.
0-0T-18
FS
0-0J-18
12V POWER FROM FR.JCT.BOX SEE P. 2.1
12-12F-12
C523
1
A4
F3
20A
D4
C523
8
12-52-14
R12
86
85
30
87
87A
C71
22
0-53-20
C581
A
C4
5
12-52A-14
C101
A
ELECTRICAL HORNS
C101
B
0-0M4-14
24V HOT WIRE FROM FR.JCT.BOX SEE P. 1.1
24-24D-14
C523
2
A3
F4
5A
D3
C523
7
24-123A-18
TO DIGITAL CLOCK SEE P. 14.1
24-123A-18
C340
1
RS17
220 OHMS
RED
PIEZO
BLK
C340
2
TO FIRE ALARM T.T.L.T. MODULE C571 (12) SEE P. 28
0-123B-18
C71
4
C6
4
C20
22
0-123B-18
BATT. CMPT.
C221
SENSOR
C221
2
0A-18
RS
PRE HEATER CMPT.
C219
SENSOR
C219
2
ENG. CMPT.
C222
SENSOR
C222
2
ENG. CMPT.
C223
SENSOR
C223
2
0P-18
C91
55
OXA-18
RS
0-123B-18
C91
3
0-123B-18
TO TTLT WINDOW AJAR C572 (11) SEE PAGE. 28.1
OT2
RS
C582
A
B
C603
1
2
C601
2
1
0-260-20
0-0T2-20
0-0T2-20
0-260-20
C602
2
1
MAGNETIC SWITCH N.C. - WINDOW OPEN
ONLY ON H3-45
R.H.
L.H.
WINDOW AJAR
ALARM AND SIGNAL
CUT-OUT PNEU. ACC.

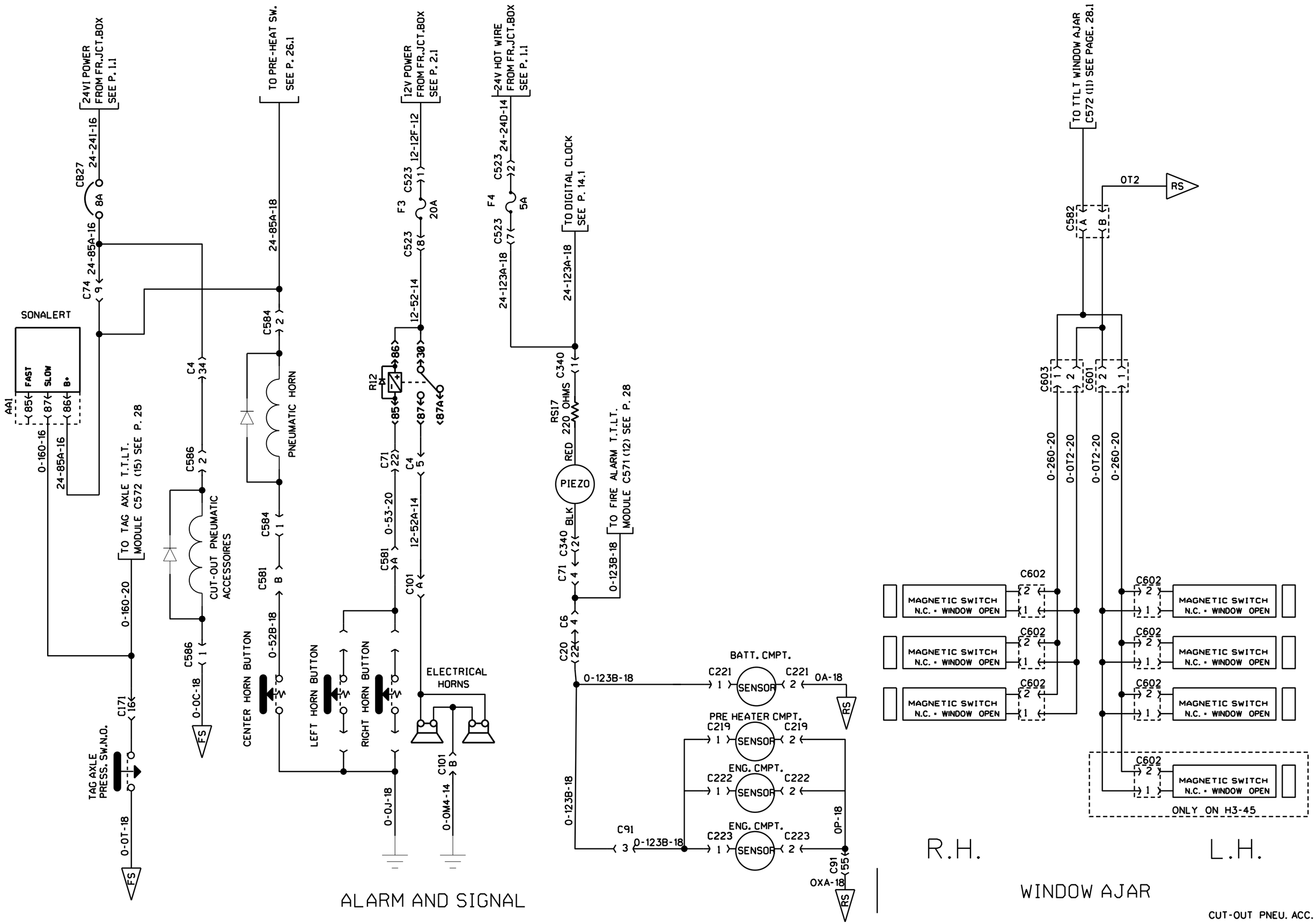

PREVOST	WIRING DIAGRAM	NO: D060976	PAGE: 7.2sp1	REVISION 04

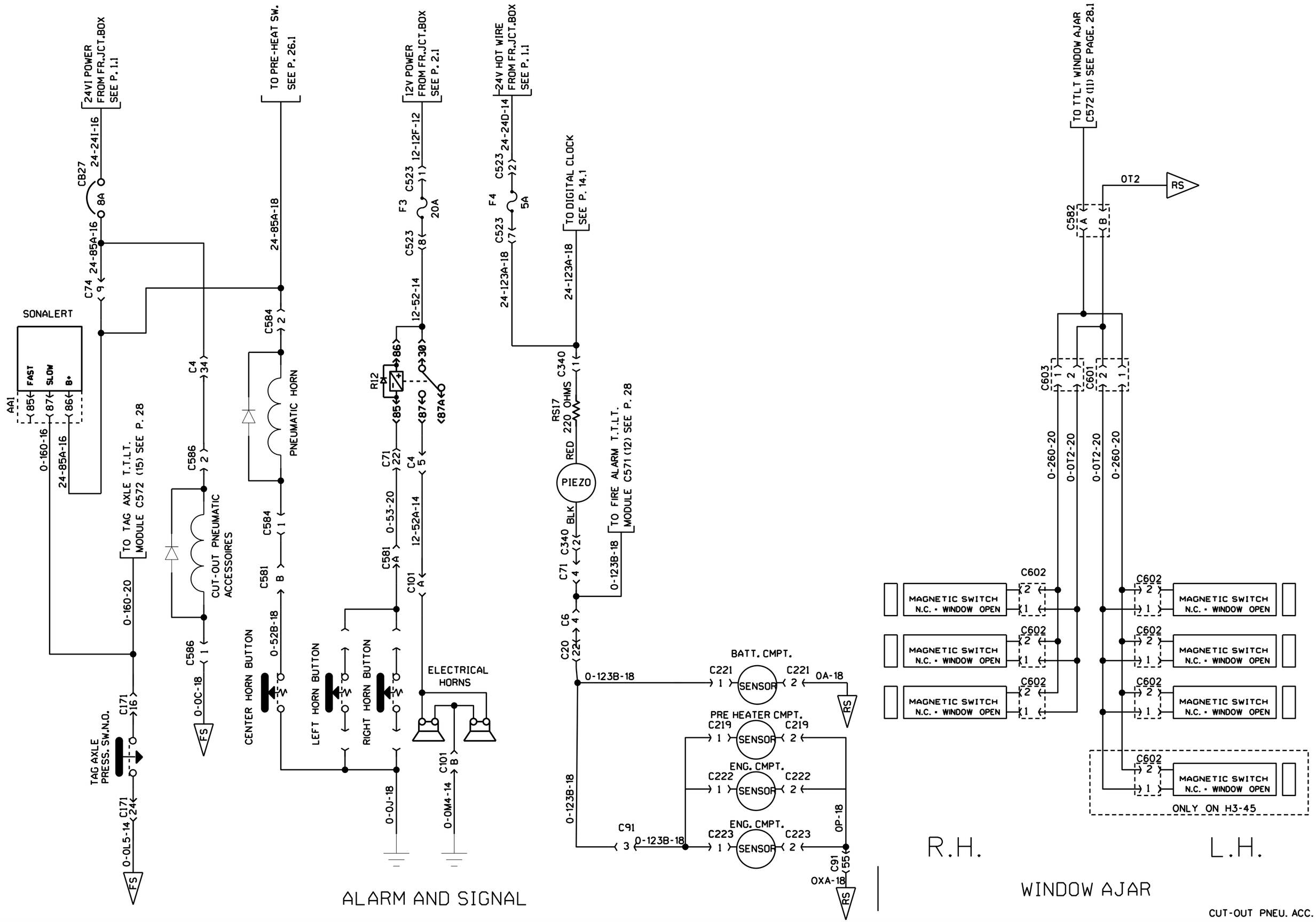

PREVOST	WIRING DIAGRAM	NO: D060976	PAGE: 7.2sp1	REVISION 07

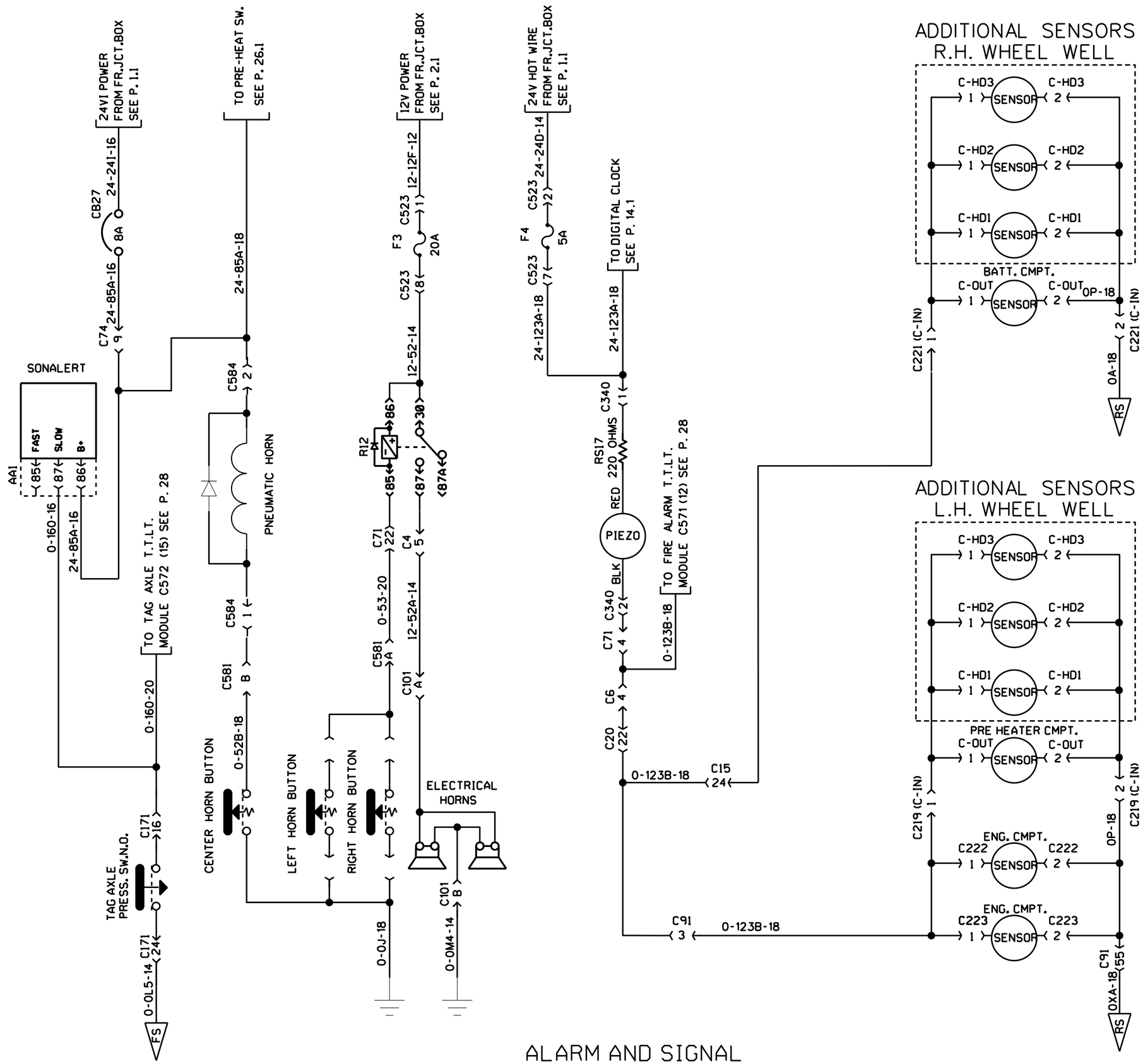

ALARM AND SIGNAL

PREVOST	WIRING DIAGRAM	NO: D060976	PAGE: 7.2sp2	REVISION 00

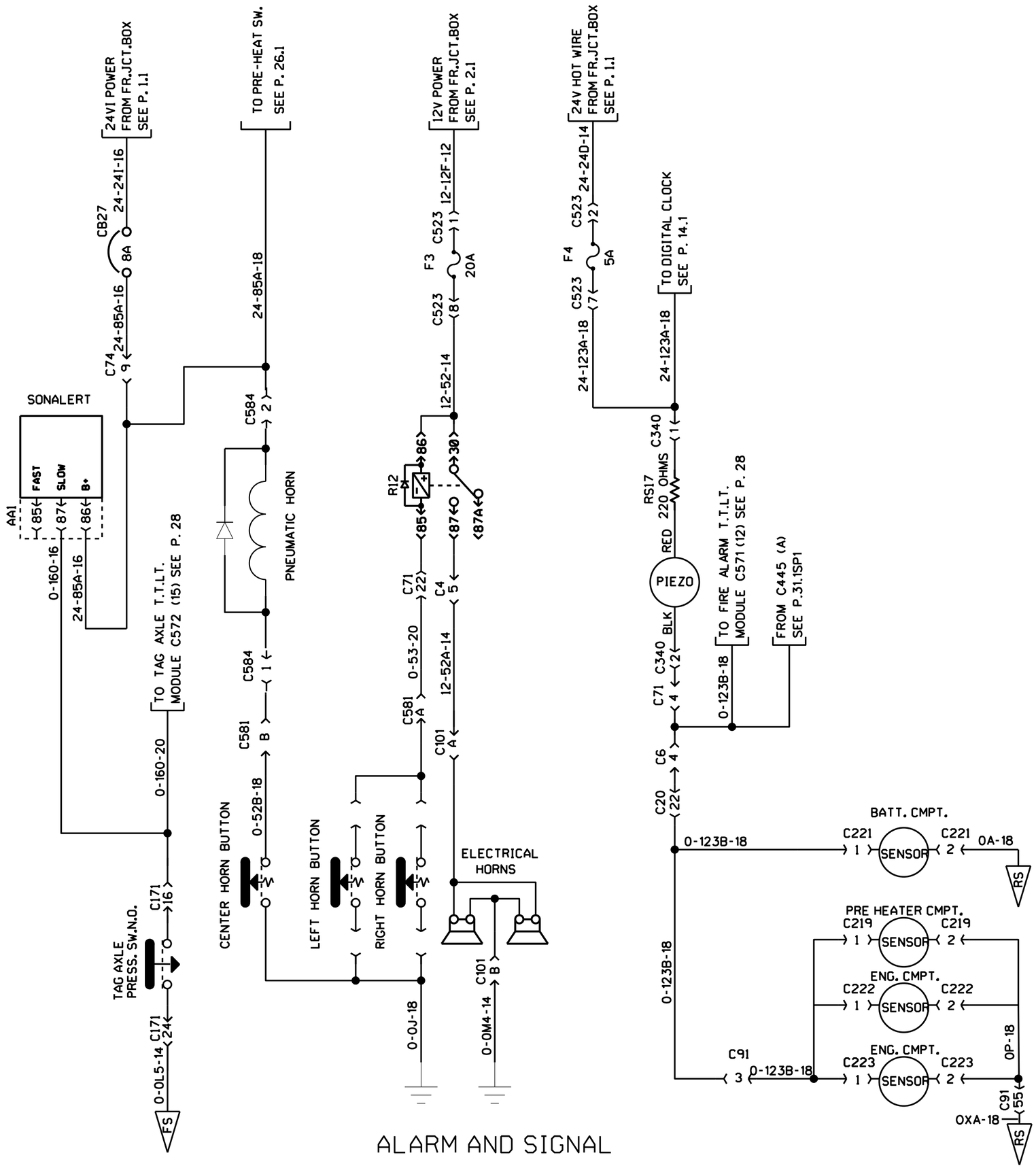

ALARM AND SIGNAL

PREVOST	WIRING DIAGRAM	NO: D060976	PAGE: 7.2sp3	REVISION 00

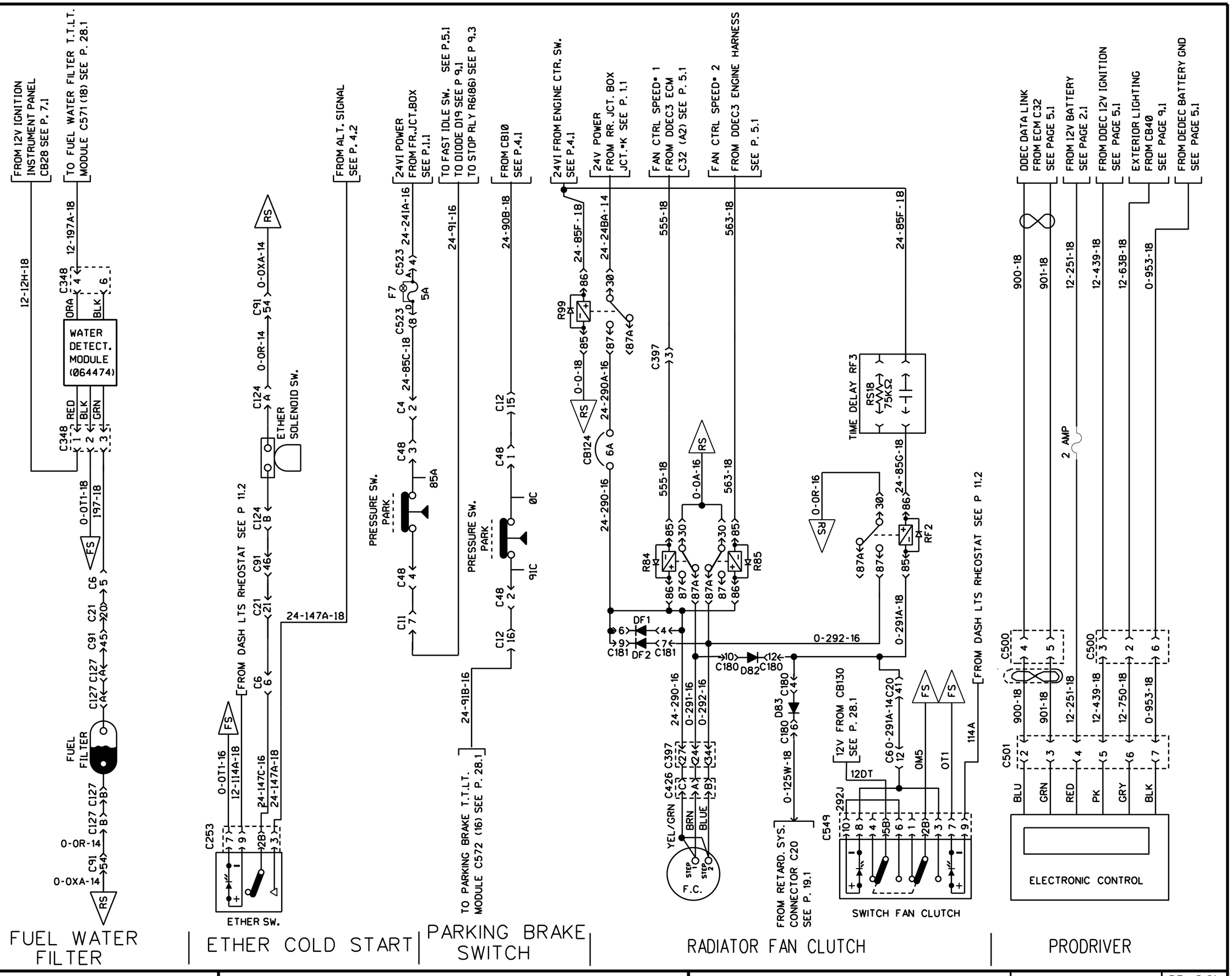

PREVOST	WIRING DIAGRAM	NO: D060976	PAGE: 8.1	REVISION 00

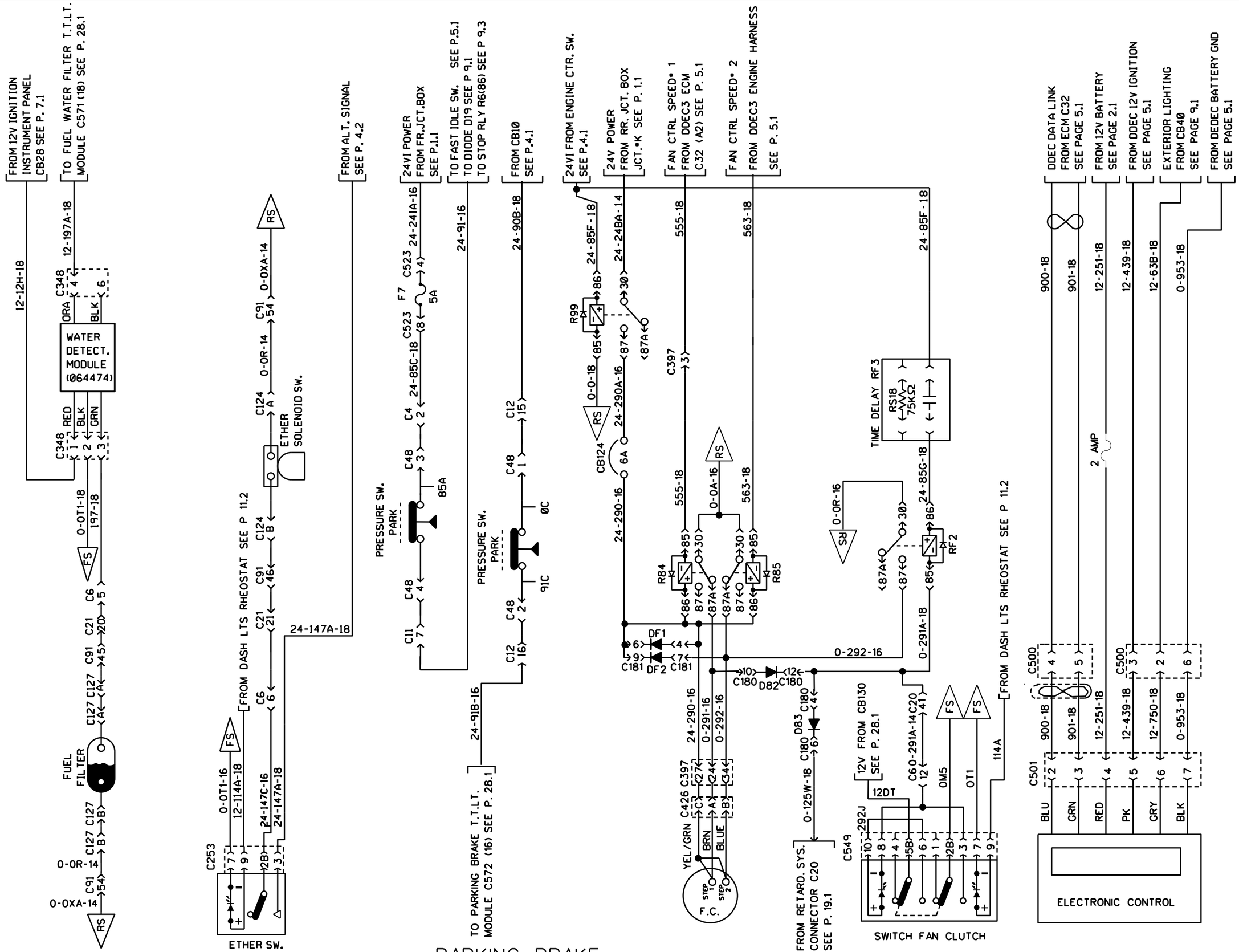

PREVOST	WIRING DIAGRAM	NO: D060976	PAGE: 8.1	REVISION 04

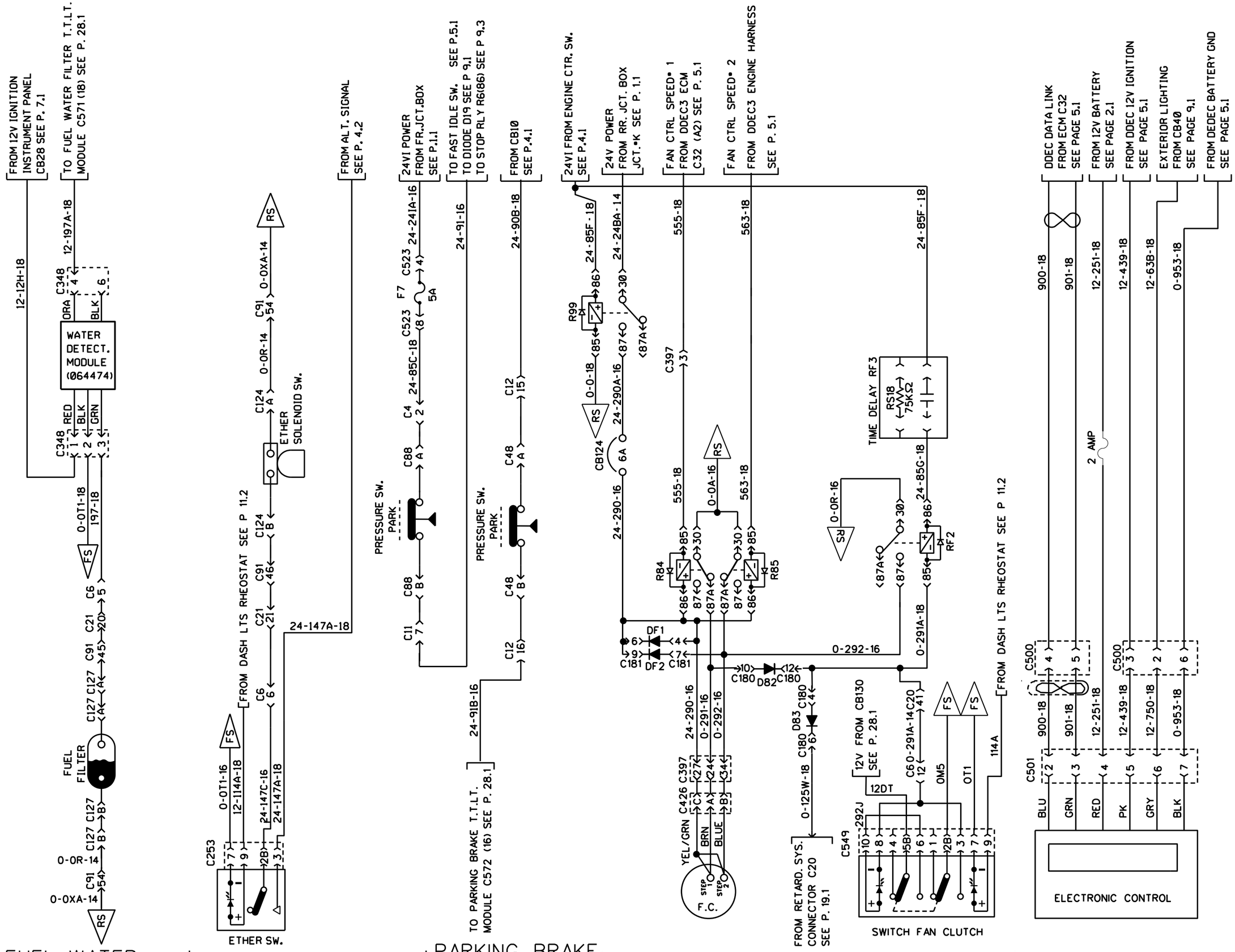

PREVOST	WIRING DIAGRAM	NO: D060976	PAGE: 8.1	REVISION 08

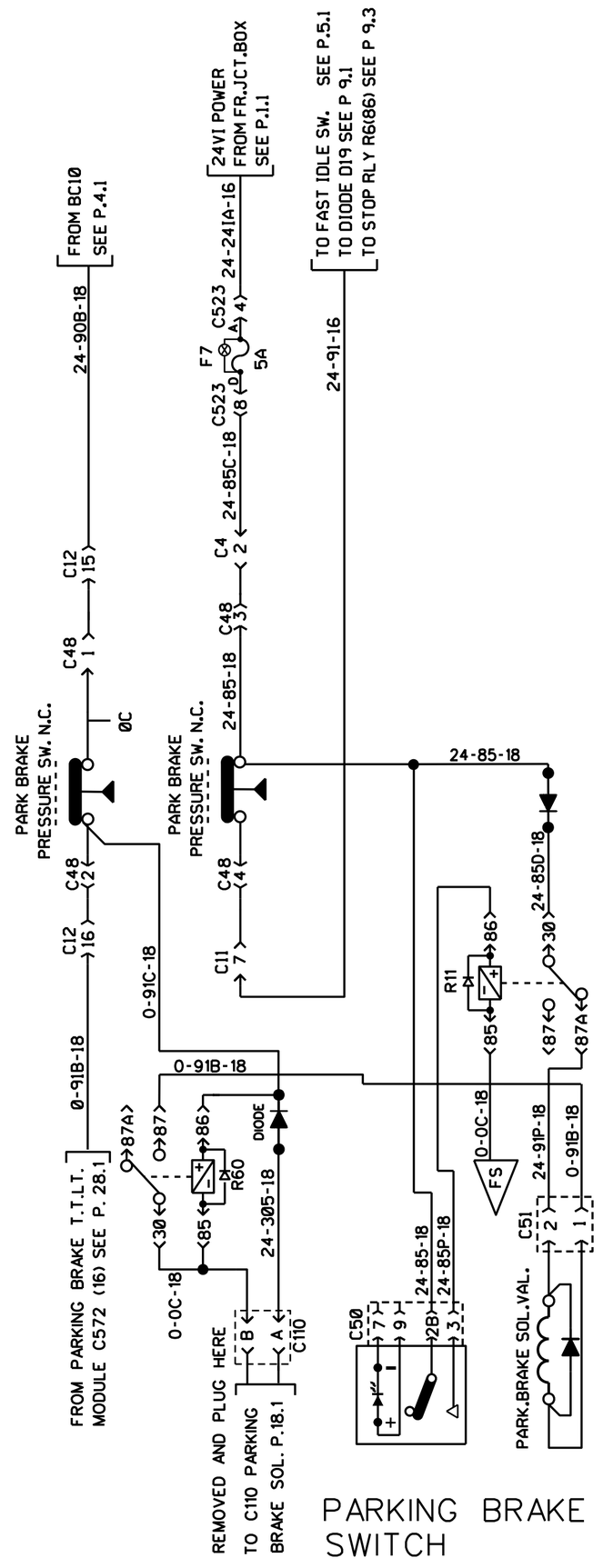

PARKING BRAKE SWITCH

PARKING BRAKE SAFETY SWITCH WITH WCL

PREVOST	WIRING DIAGRAM	NO: D060976	PAGE: 8.1sp1	REVISION 00

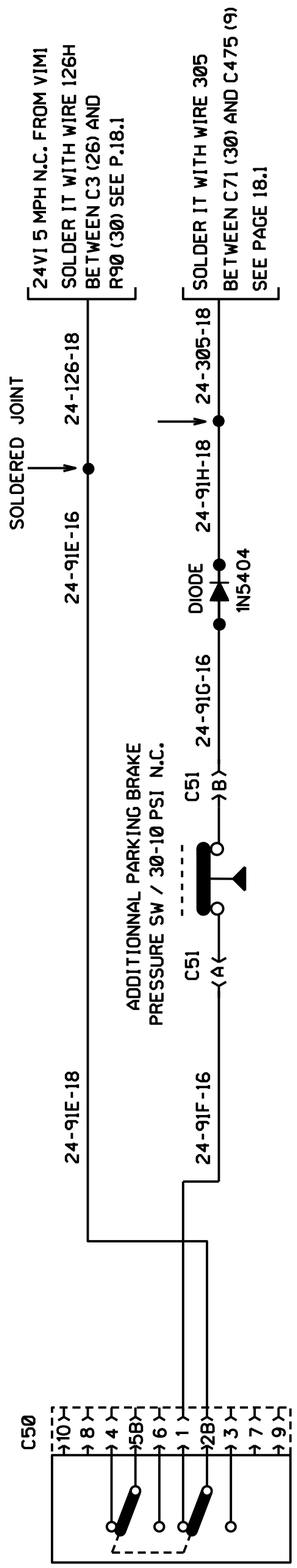

PARKING BRAKE
SAFETY SWITCH

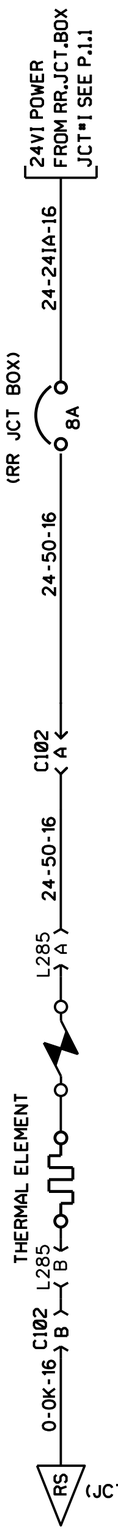

AIR DRYER

PREVOST	WIRING DIAGRAM	NO: D060993	PAGE: 8.1sp2	REVISION 00

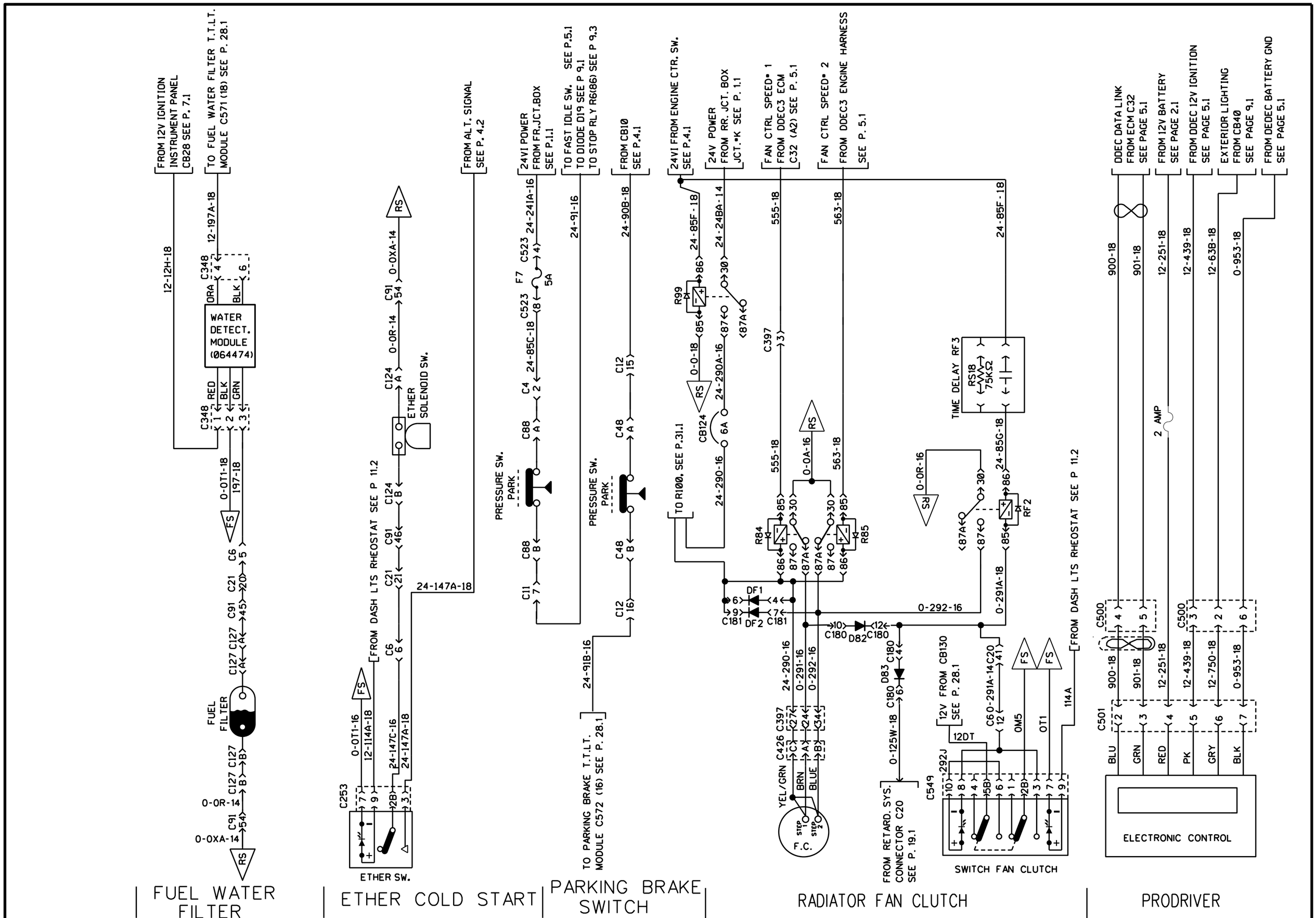

PREVOST	WIRING DIAGRAM	NO: D060976	PAGE: 8.1SP3	REVISION 00

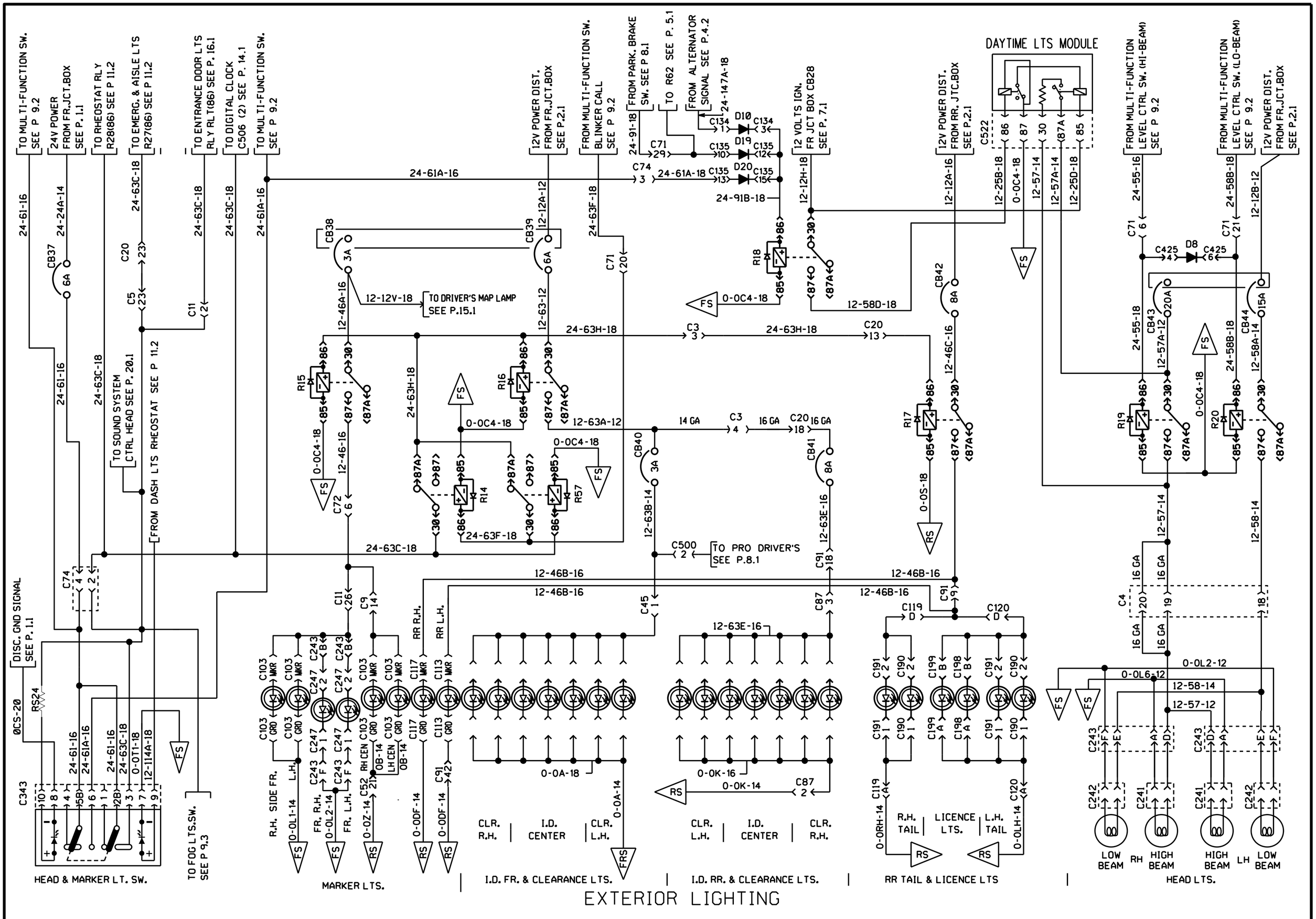

EXTERIOR LIGHTING

PREVOST	WIRING DIAGRAM	NO: D060976	PAGE: 9.1	REVISION 00

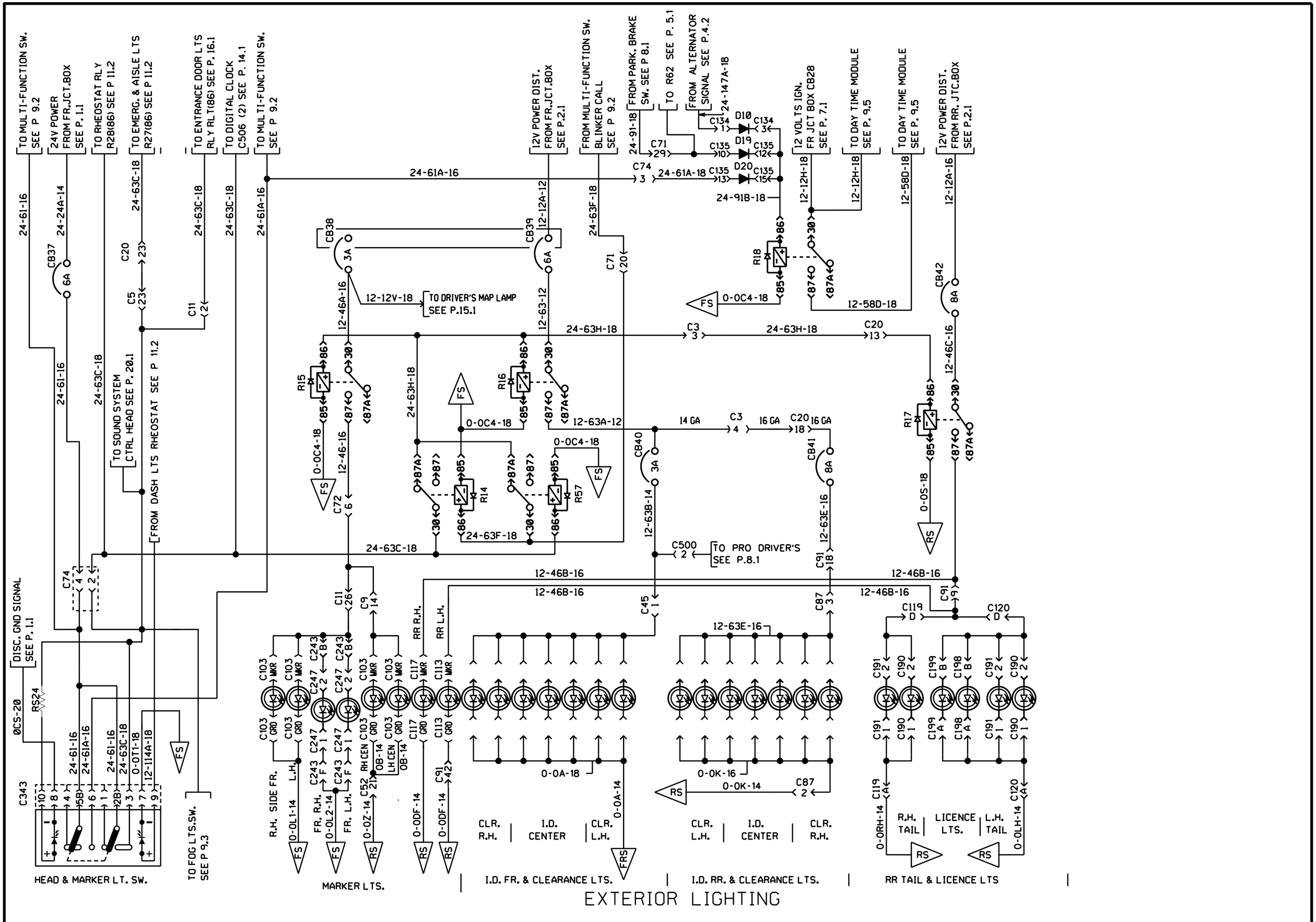

PREVOST	WIRING DIAGRAM	NO: D060976	PAGE: 9.1	REVISION 07

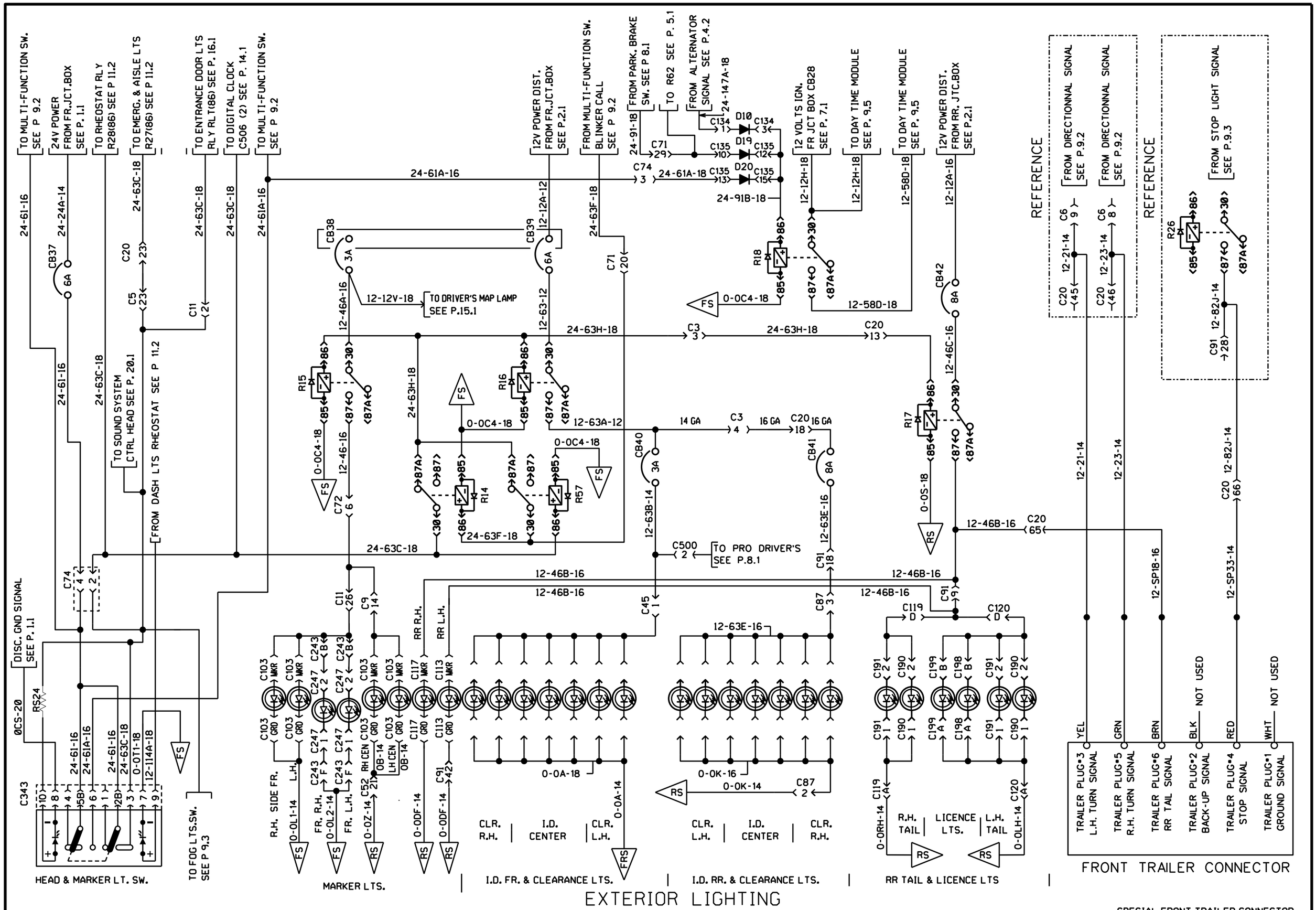

PREVOST	WIRING DIAGRAM	NO: D060976	PAGE: 9.1sp1	REVISION 00

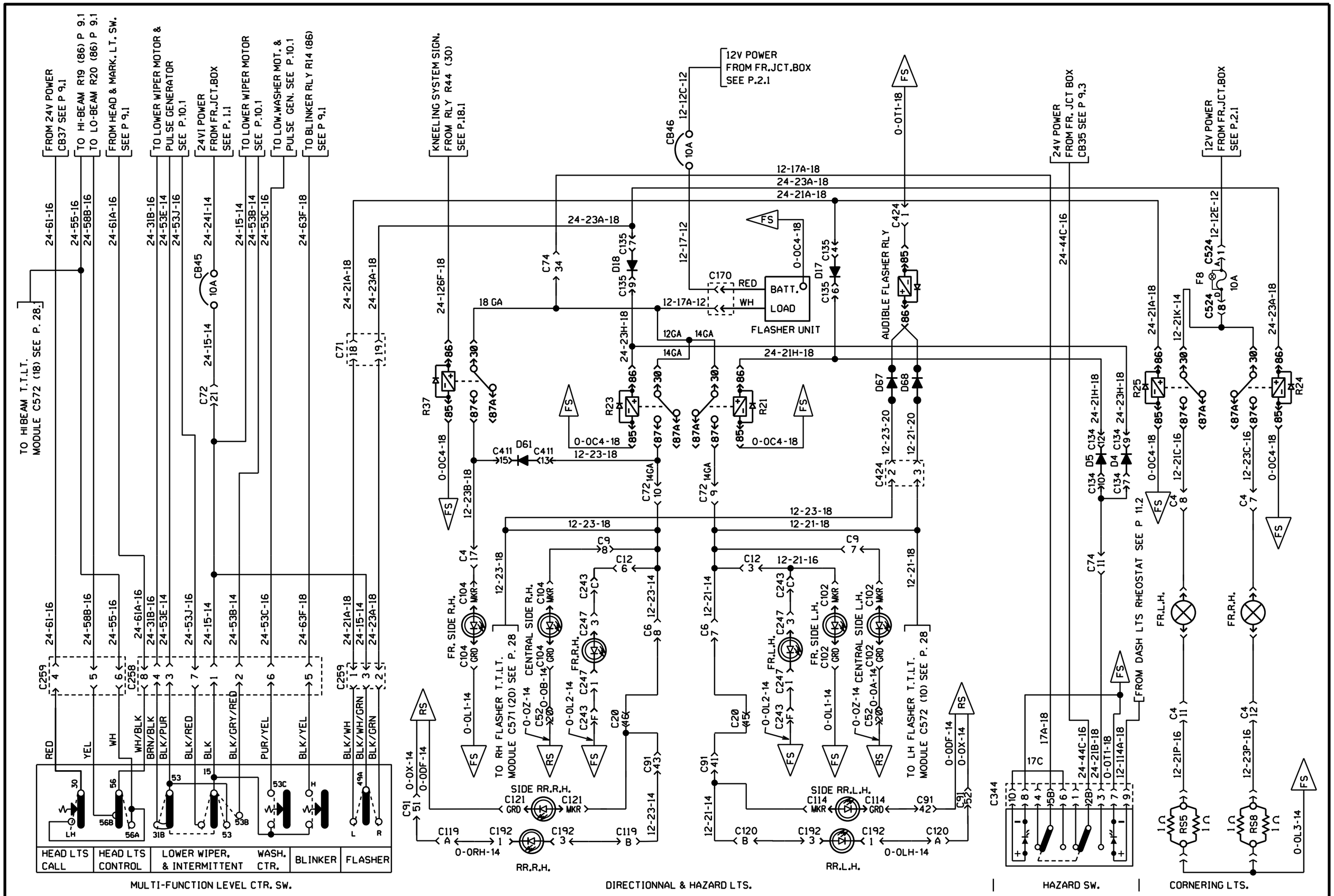

EXTERIOR LIGHTING

PREVOST	WIRING DIAGRAM	NO: D060976	PAGE: 9.2	REVISION 00

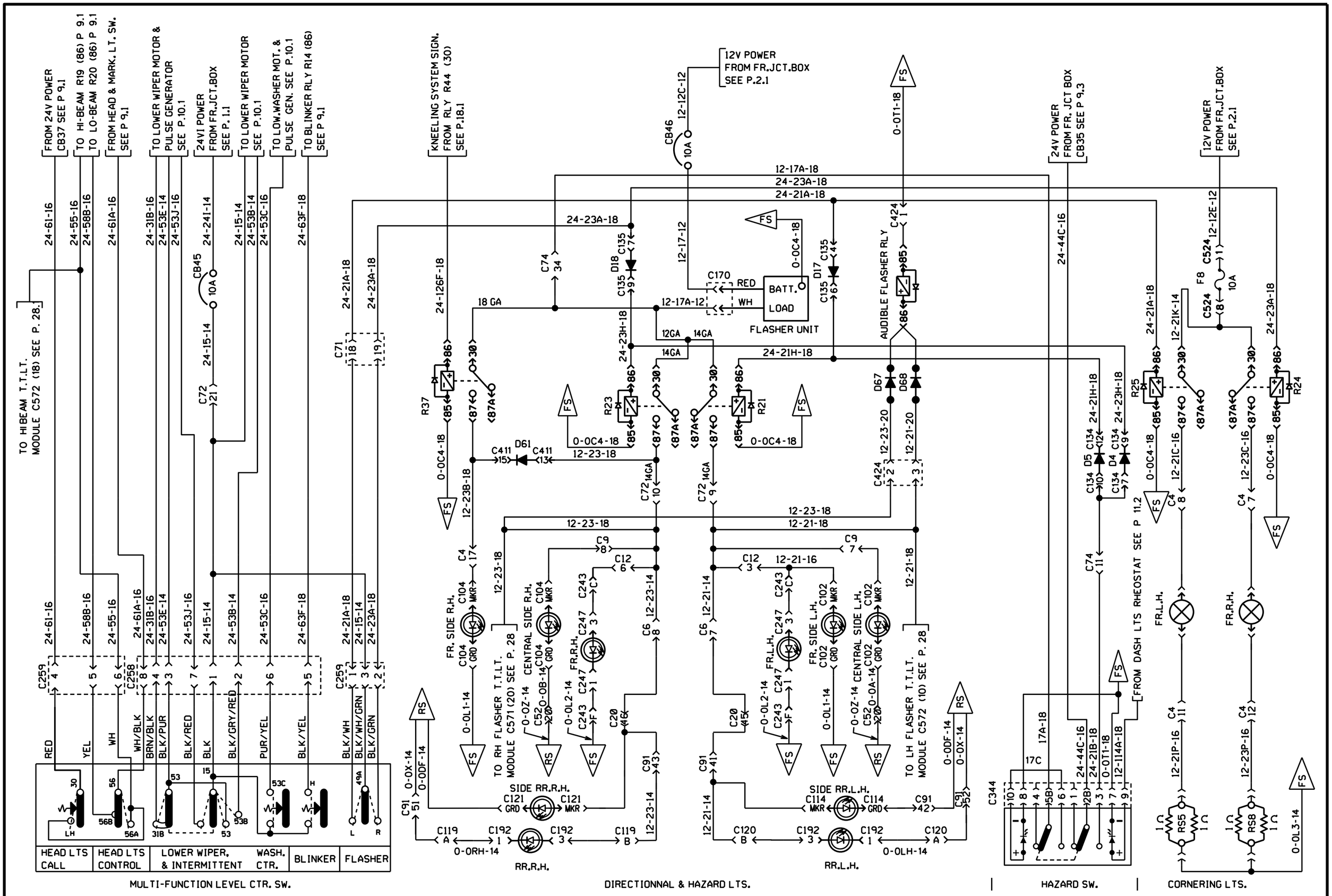

EXTERIOR LIGHTING

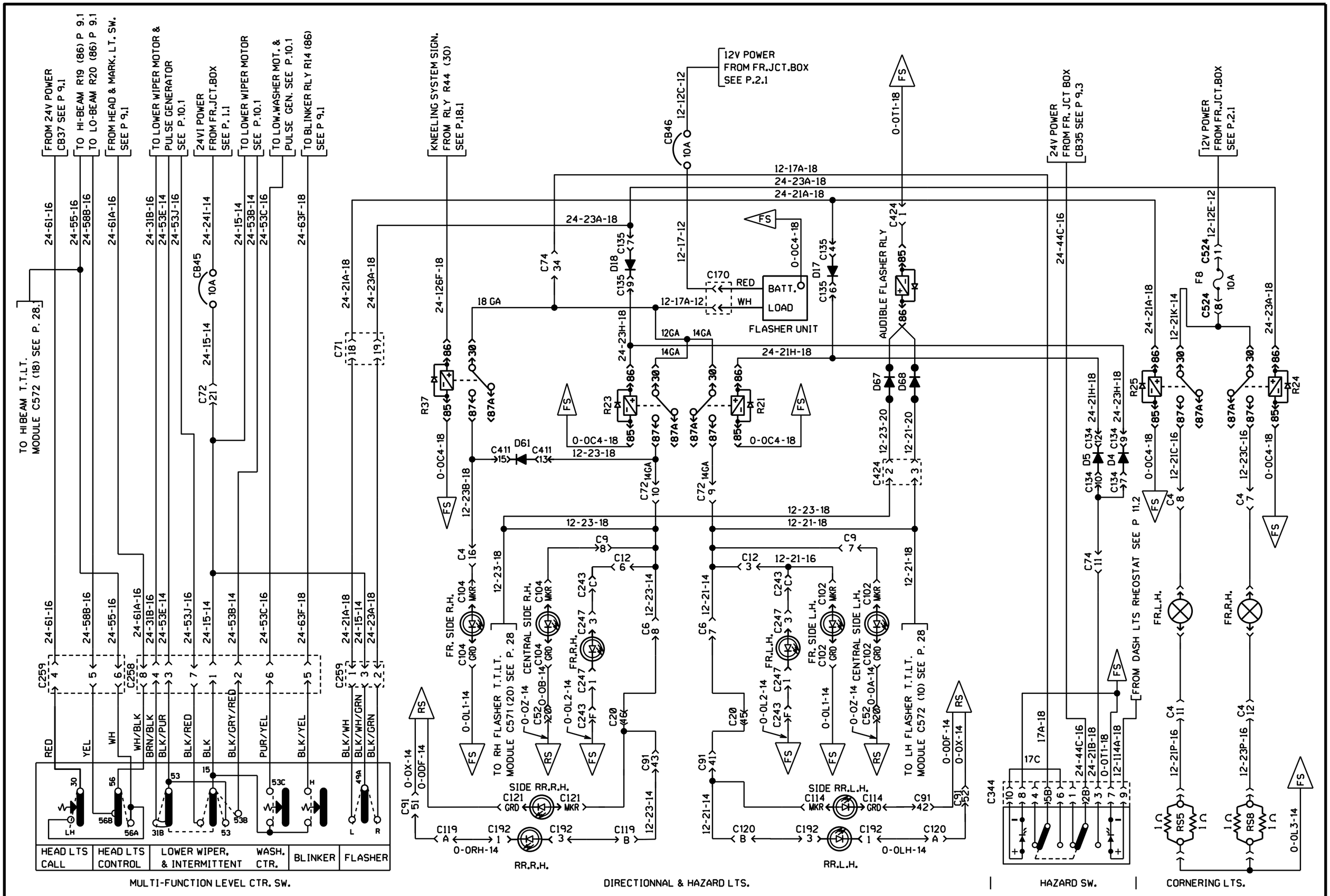

EXTERIOR LIGHTING

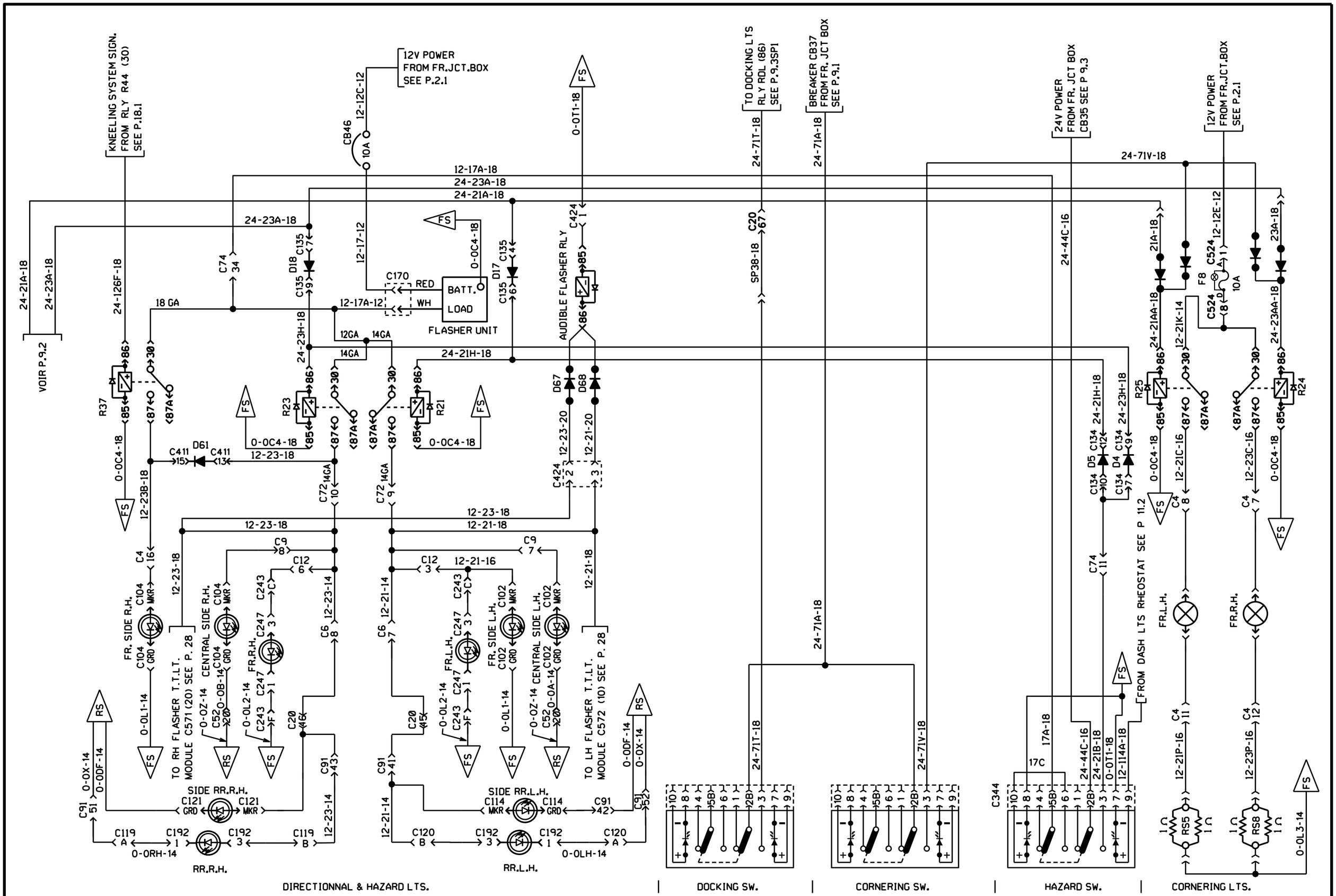

EXTERIOR LIGHTING

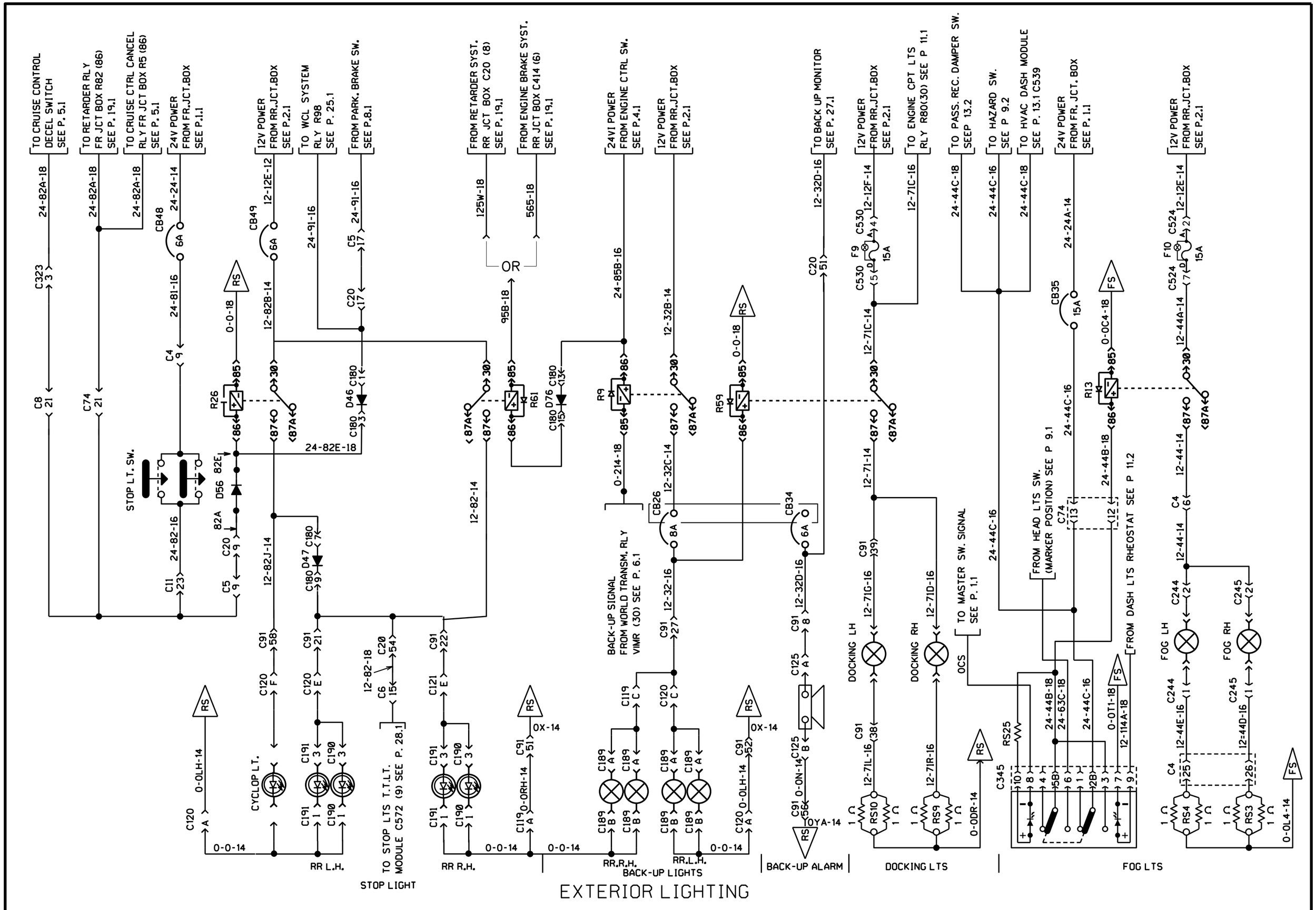

EXTERIOR LIGHTING

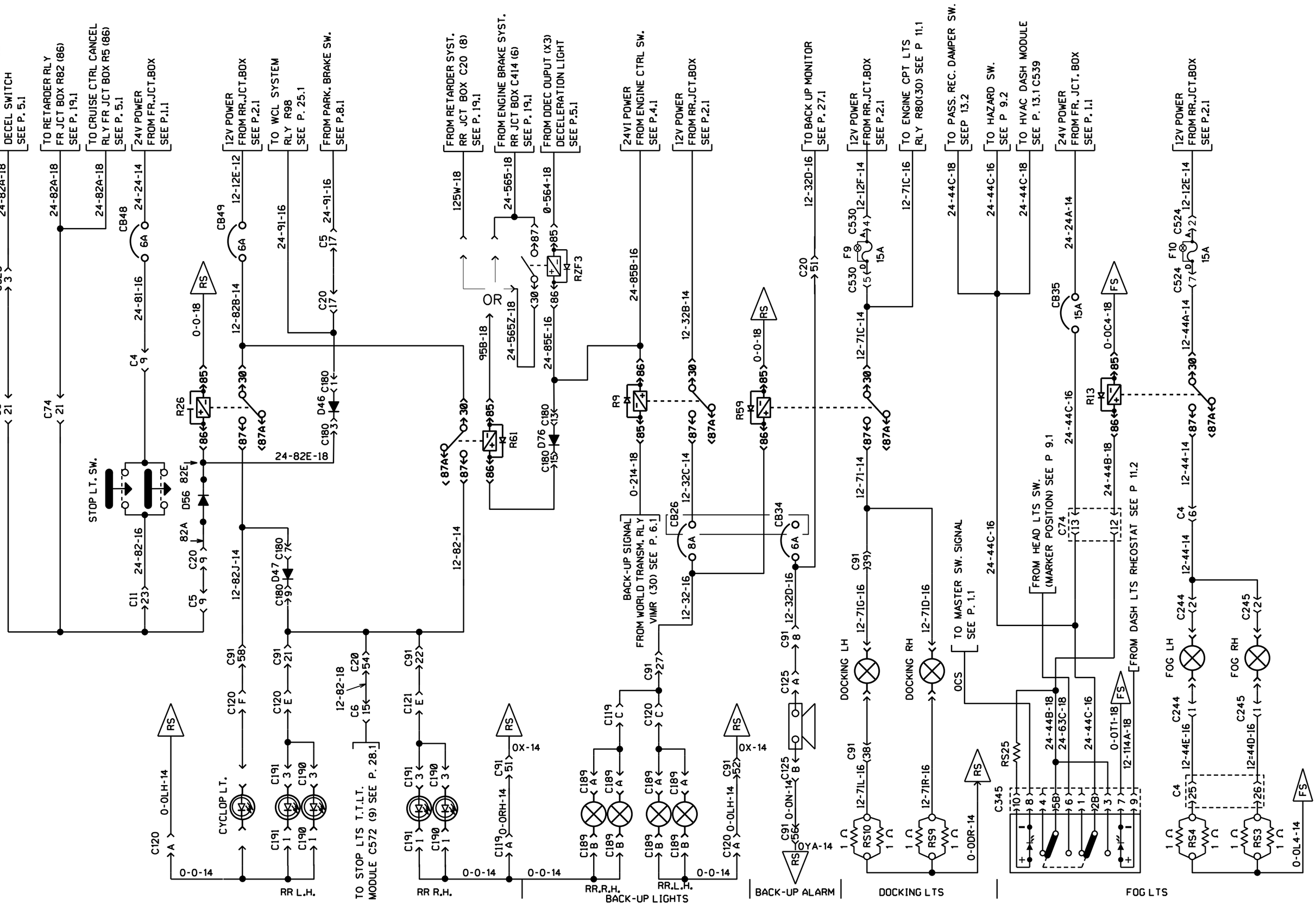

EXTERIOR LIGHTING

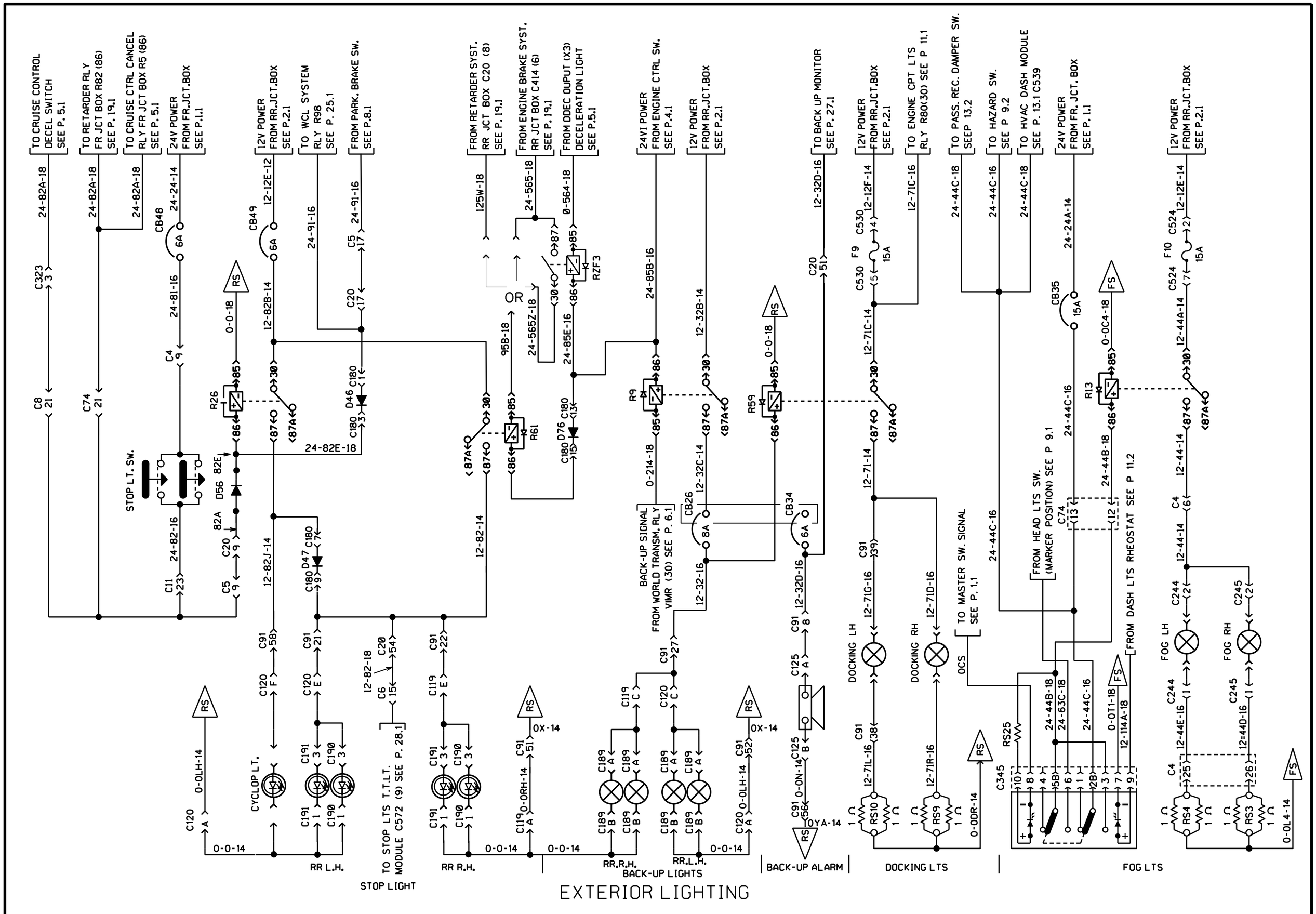

EXTERIOR LIGHTING

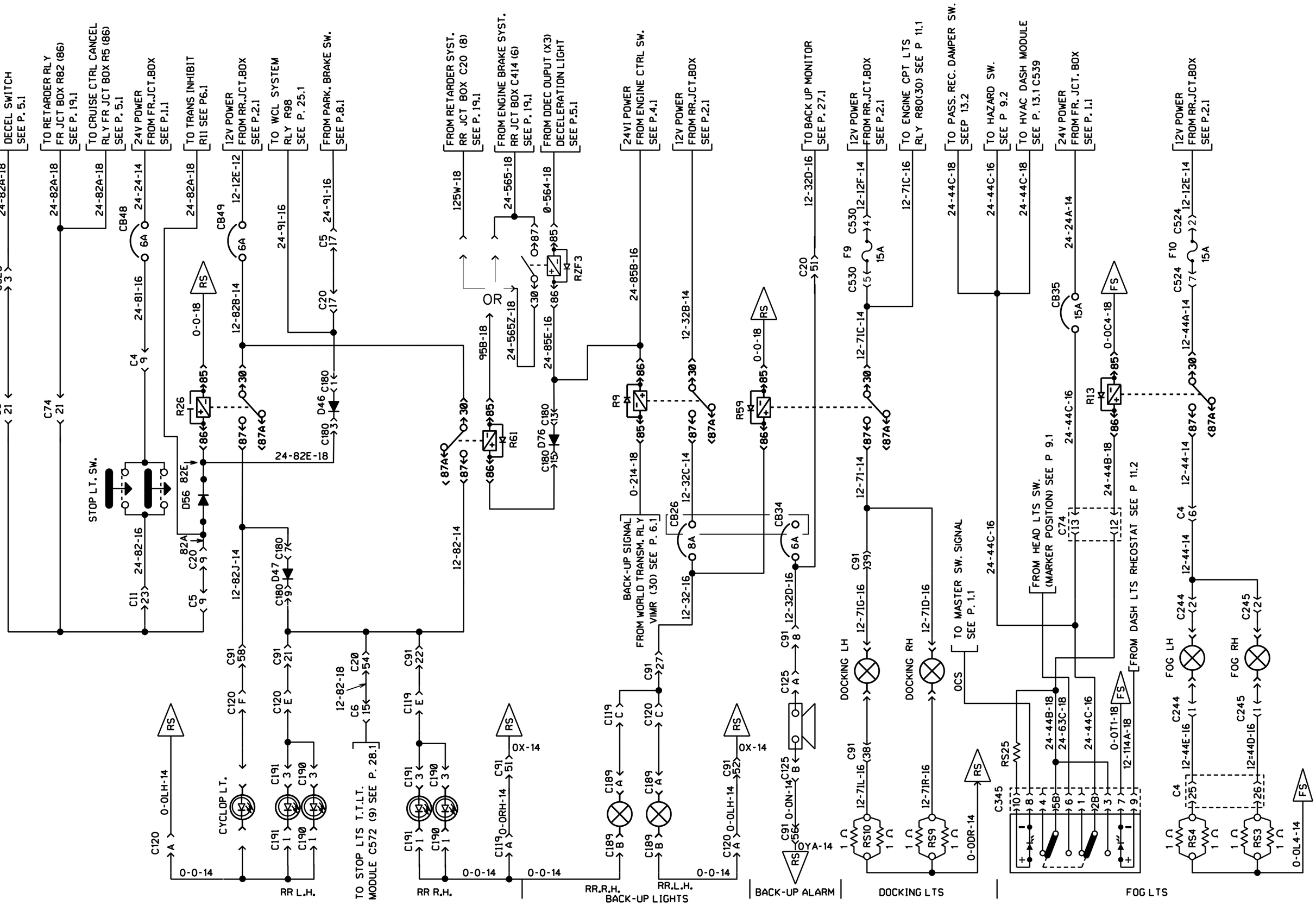

EXTERIOR LIGHTING

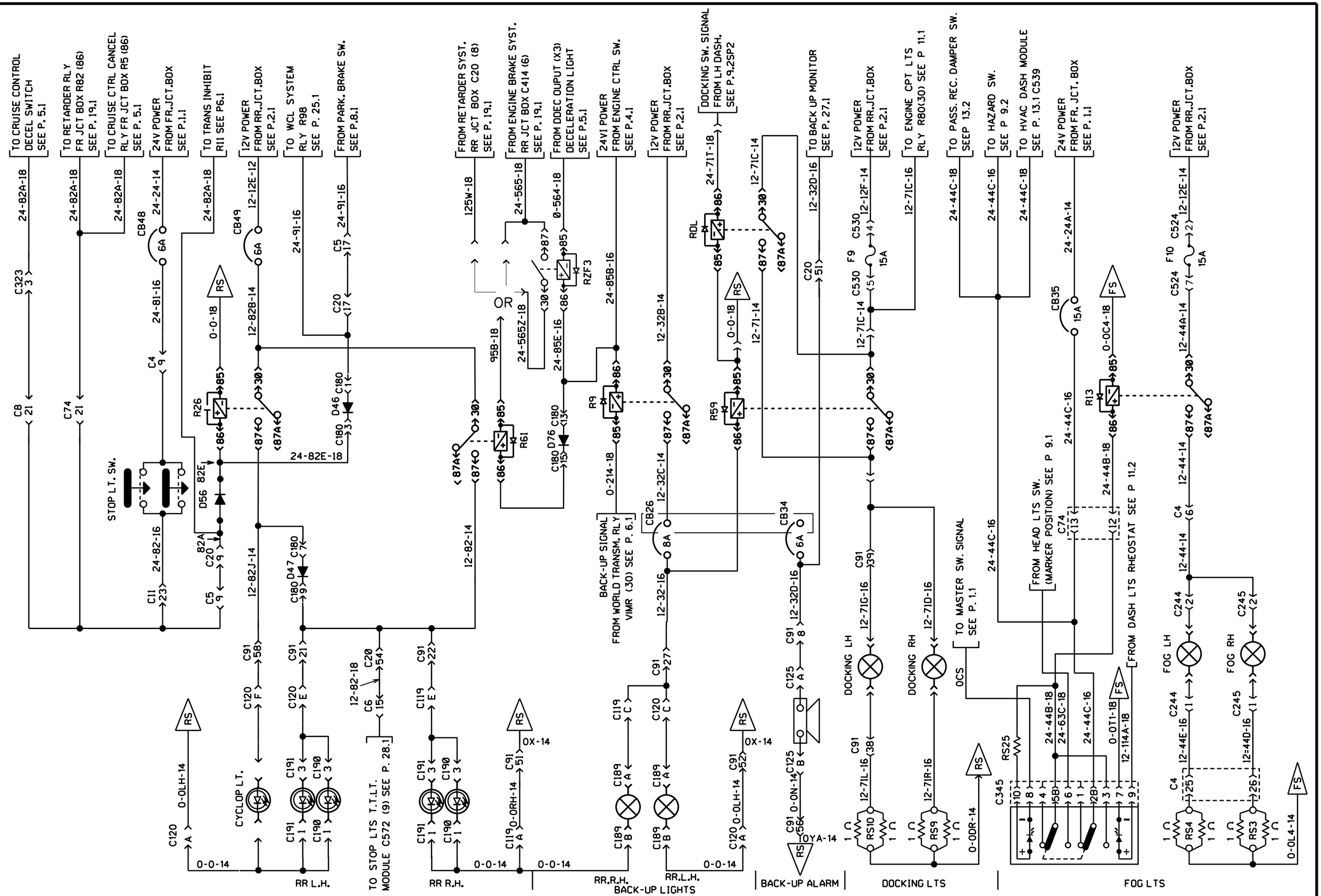

EXTERIOR LIGHTING

PREVOST	WIRING DIAGRAM	NO: D060976	PAGE: 9.3sp1	REVISION 00

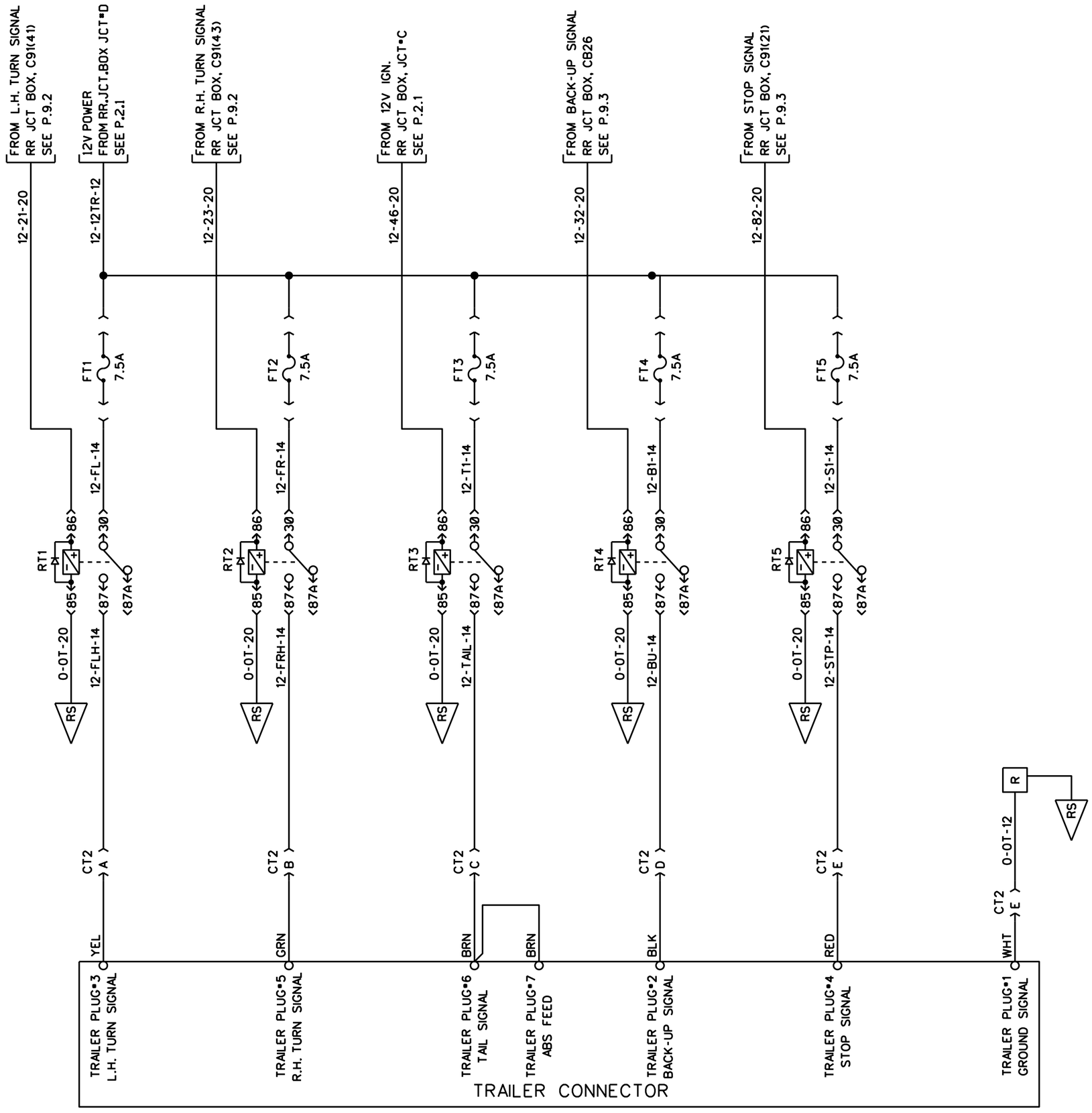

EXTERIOR TRAILER LED LIGHTING

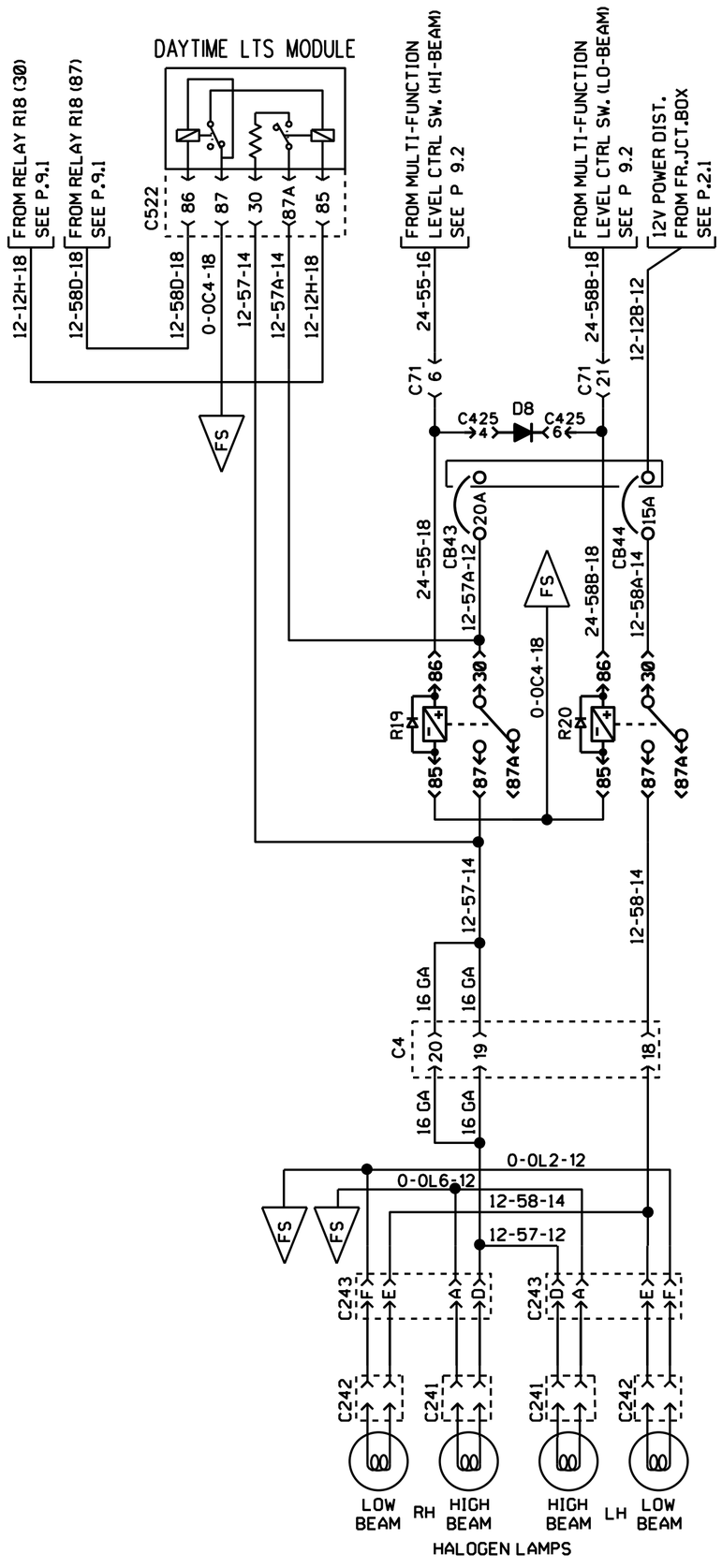

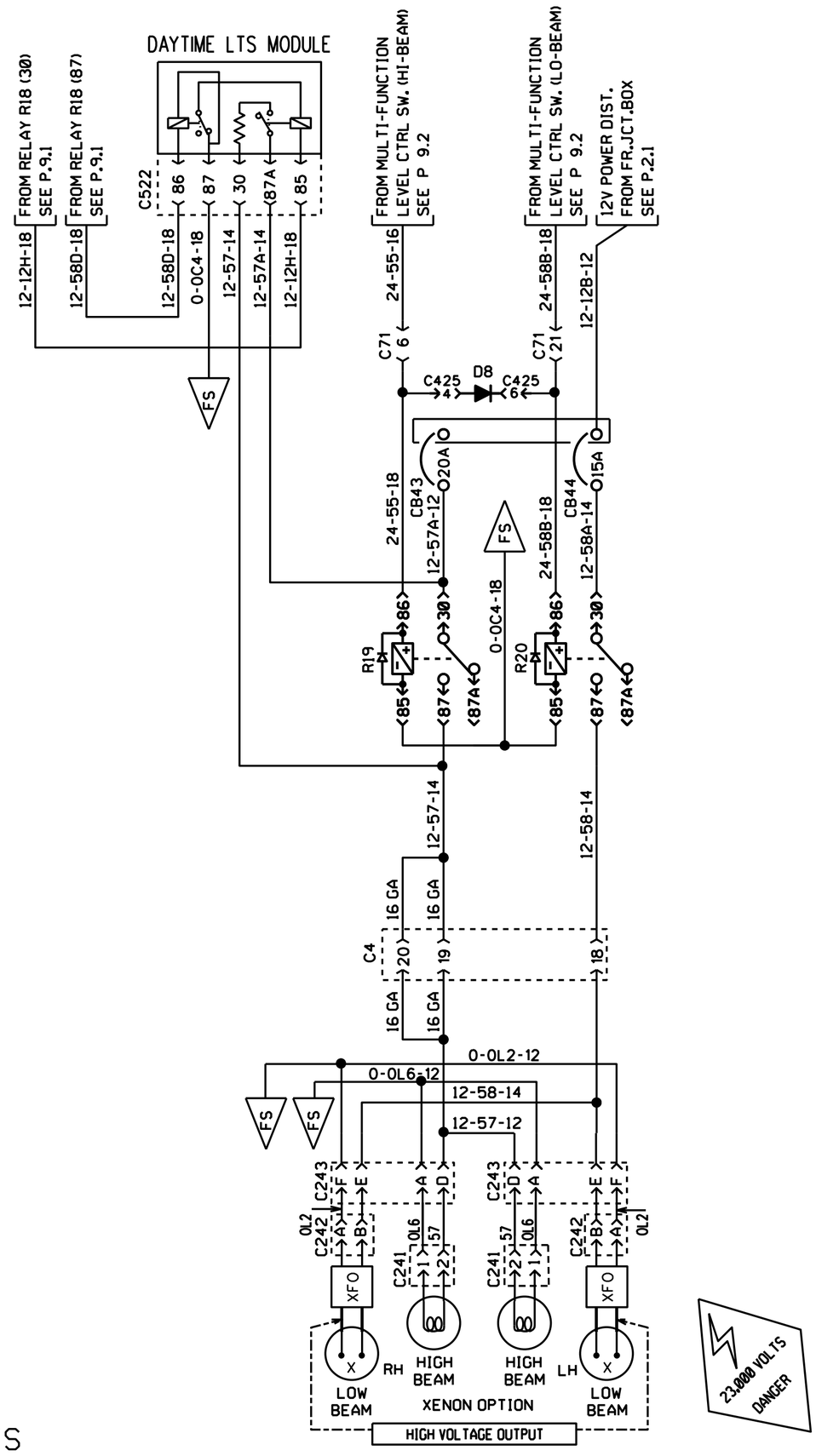

EXTERIOR HEADLIGHTS

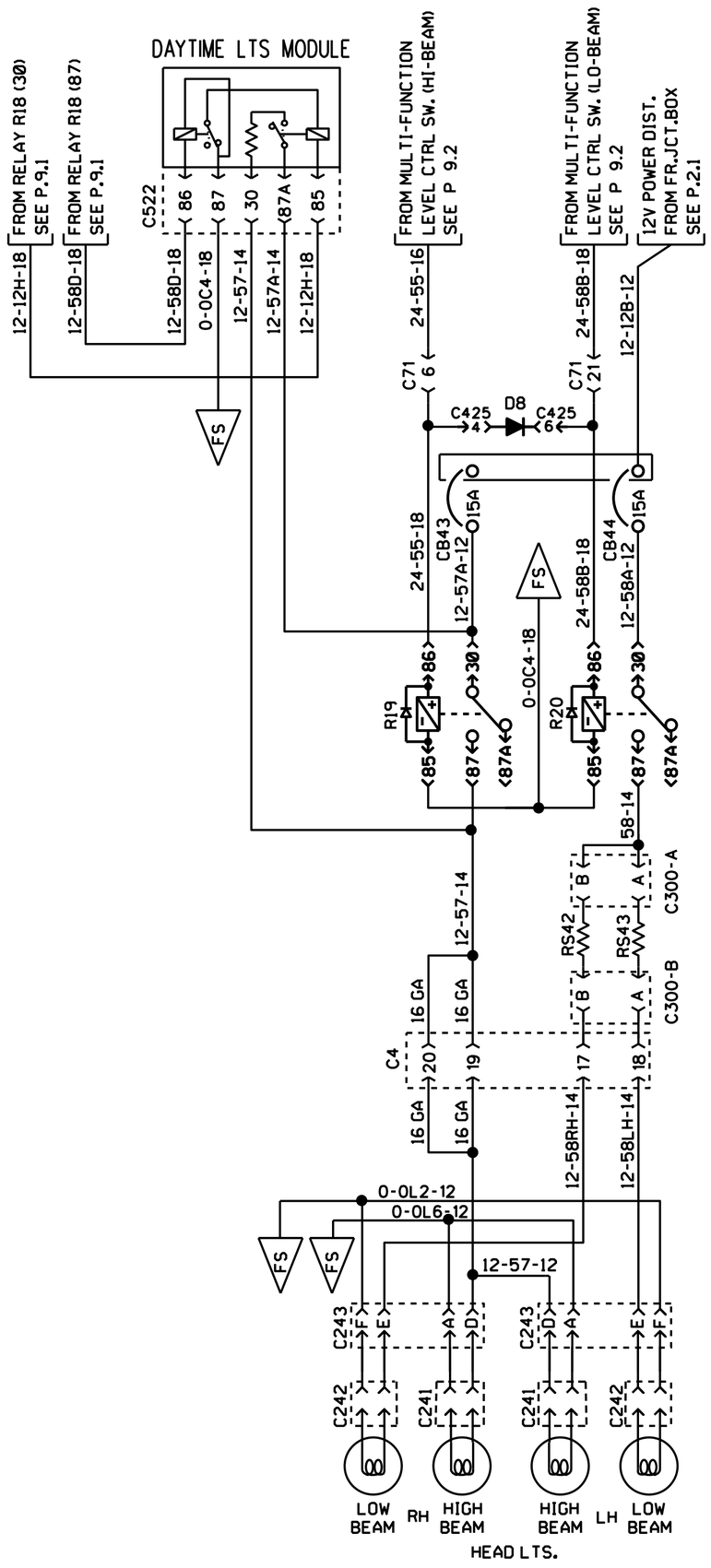

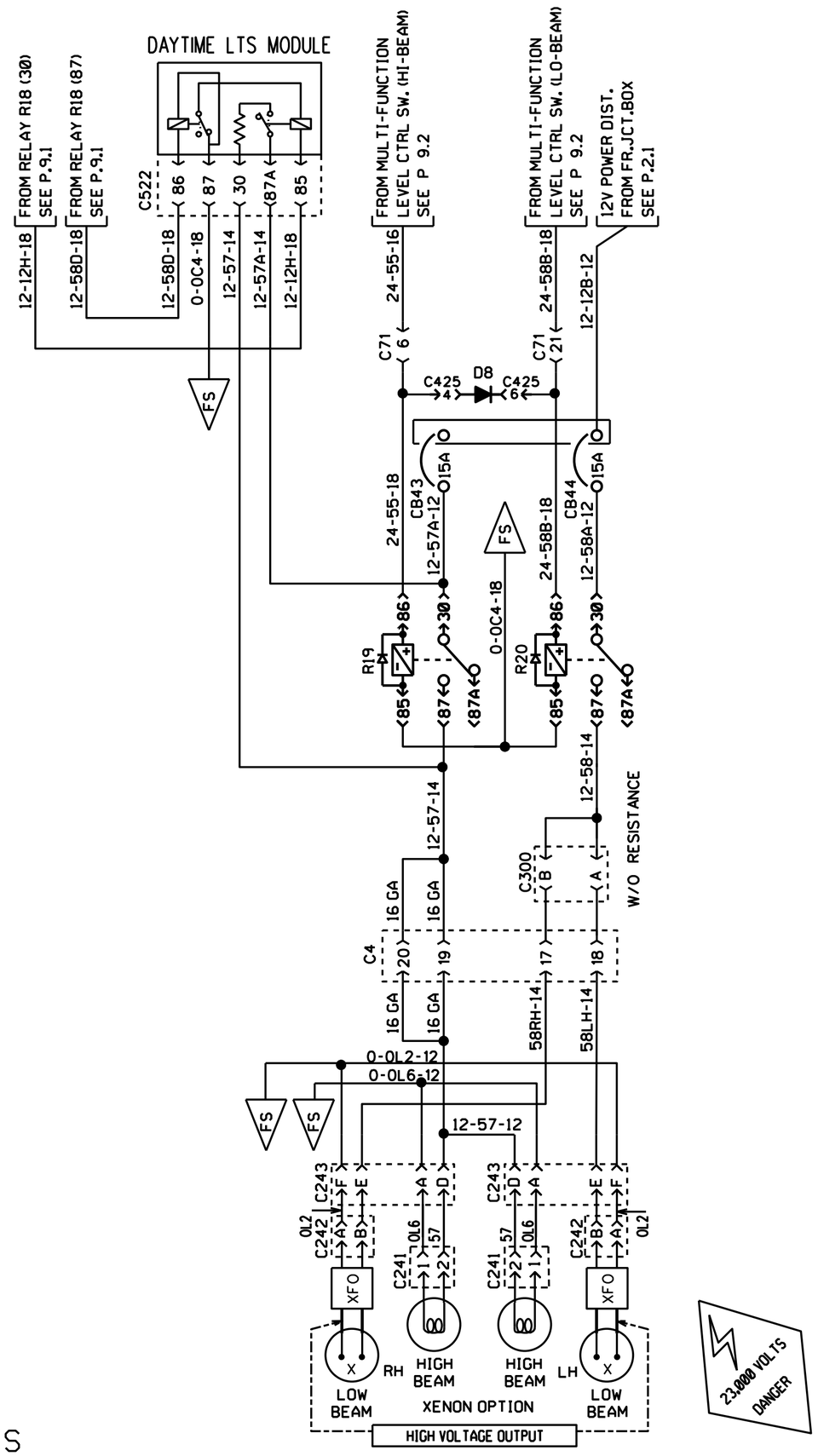

EXTERIOR HEADLIGHTS

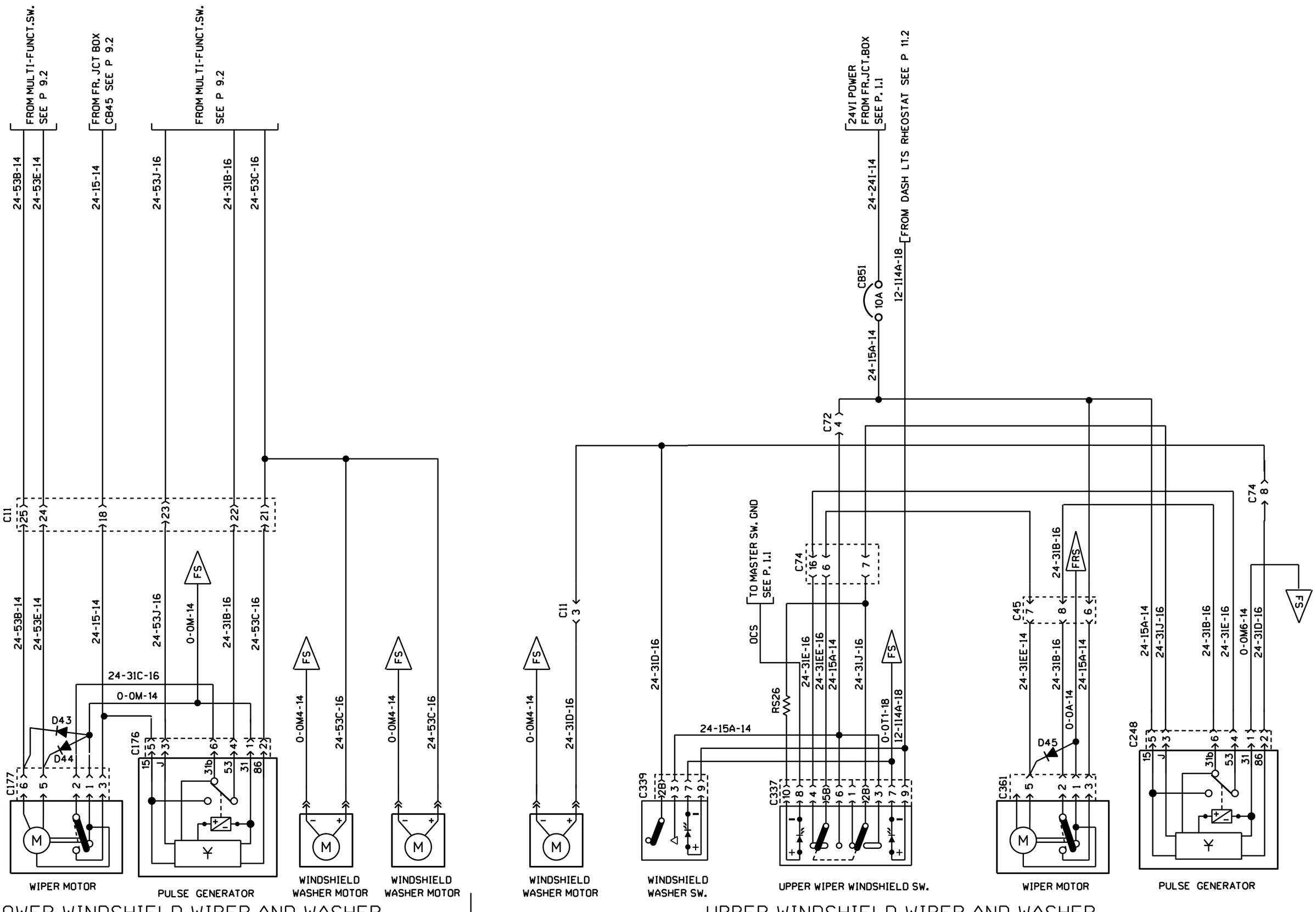

PREVOST	WIRING DIAGRAM	NO: D060976	PAGE: 10.1	REVISION 00

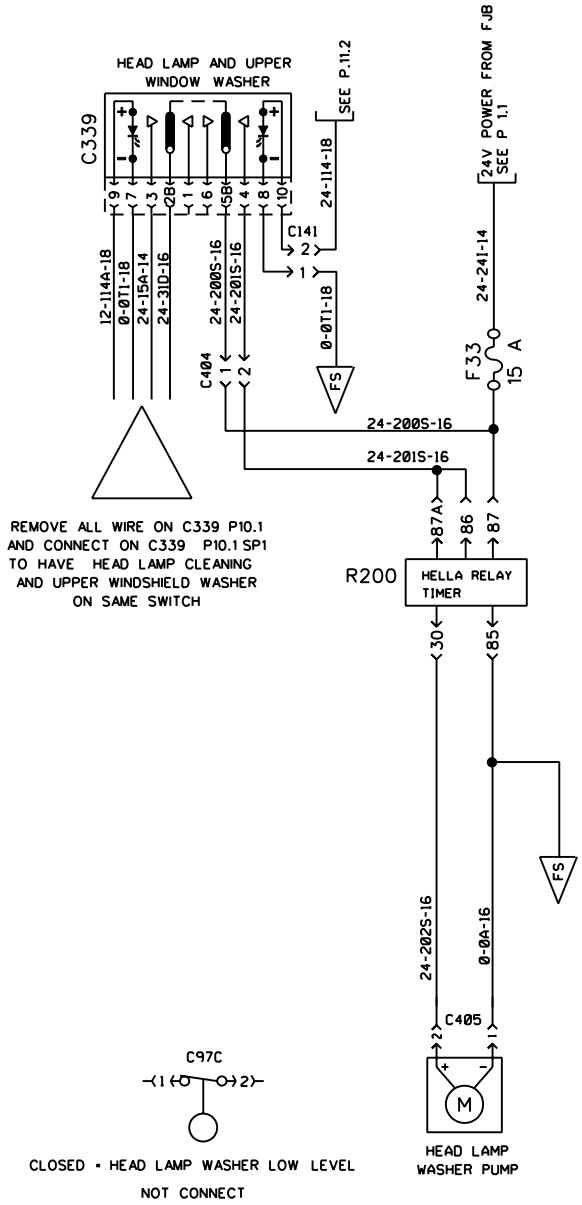

HEAD LAMP CLEANING SYSTEM

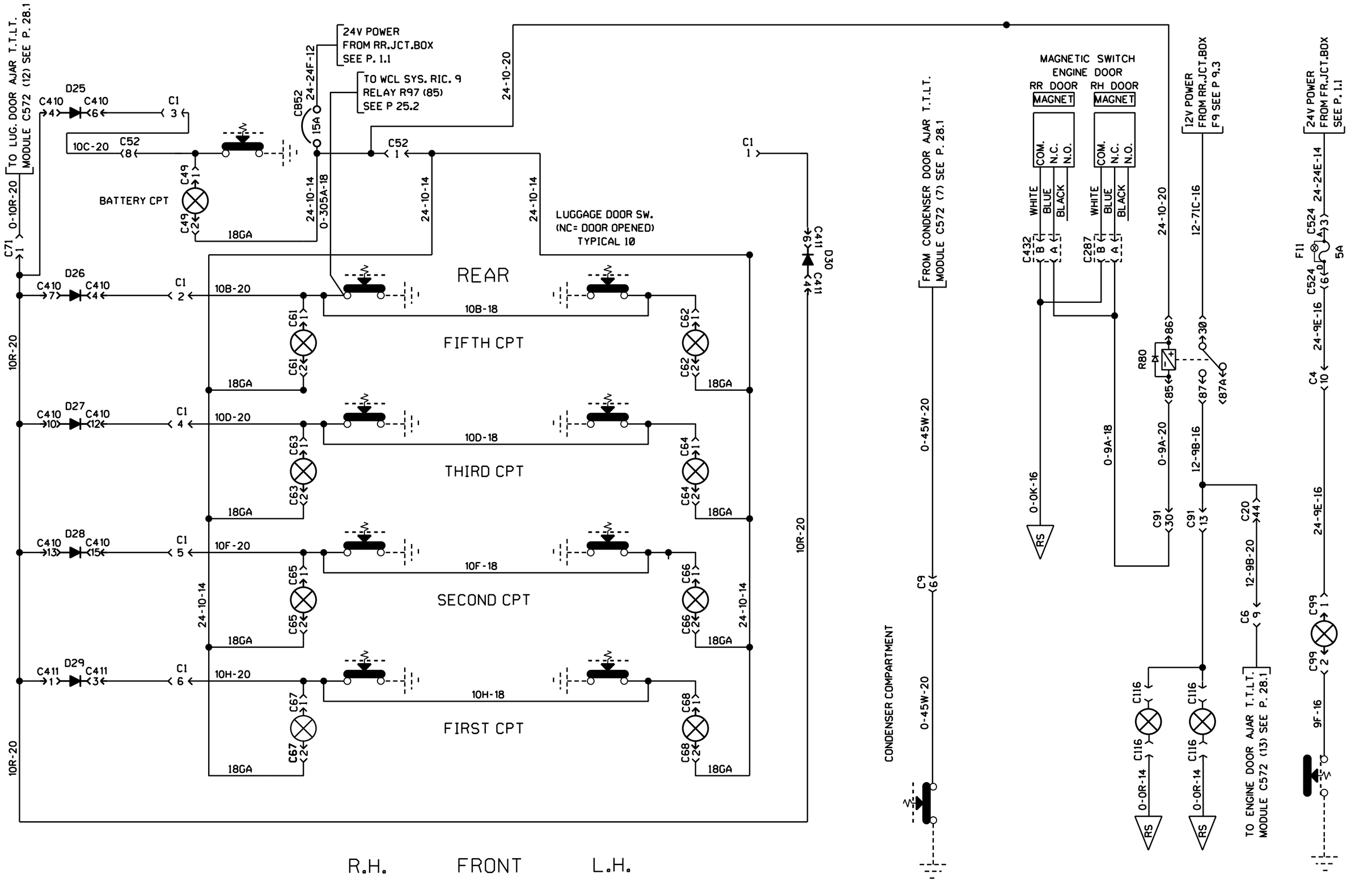

INTERIOR LIGHTING

PREVOST	WIRING DIAGRAM	NO: D060976	PAGE: 11.1	REVISION 00

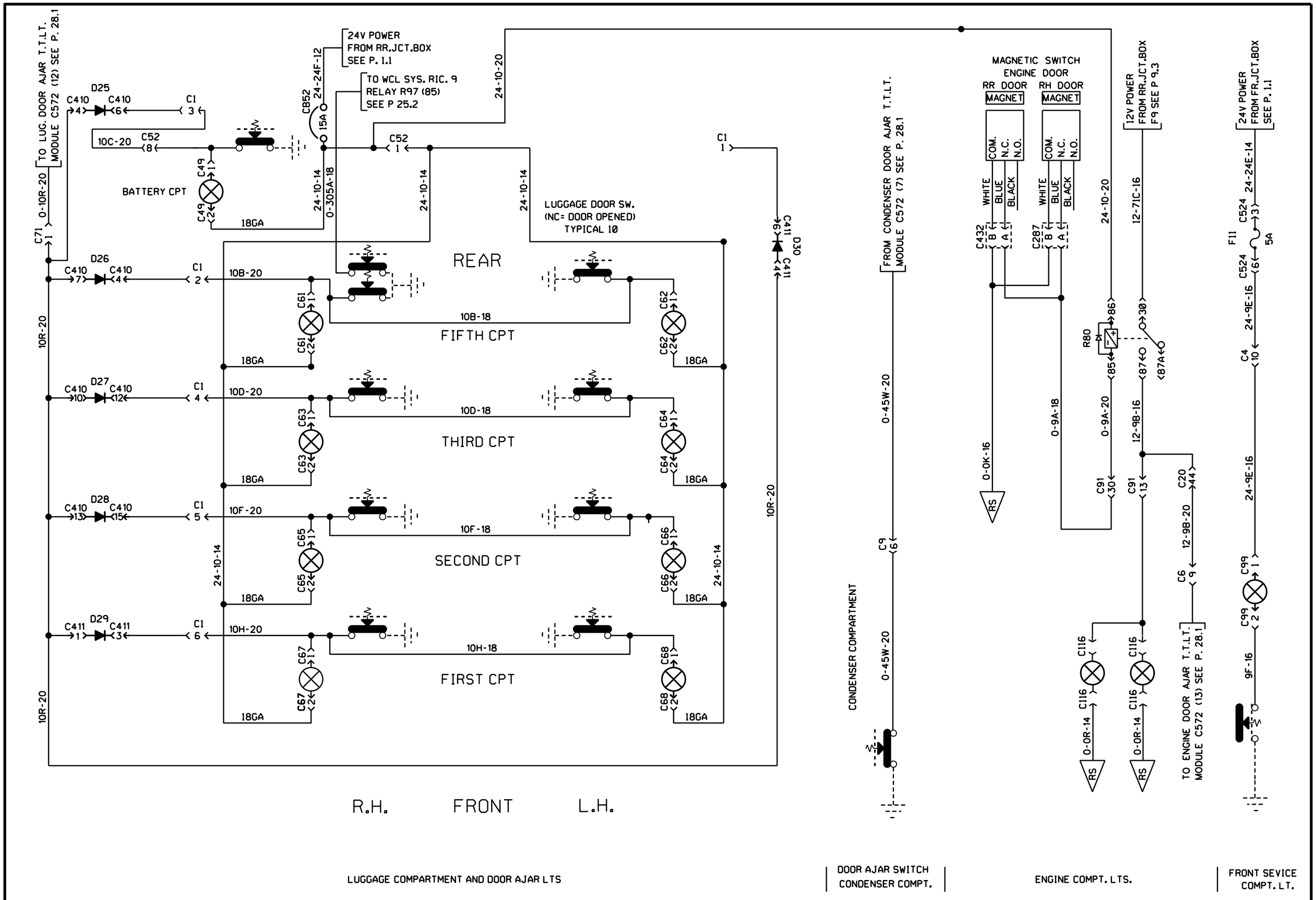

INTERIOR LIGHTING

PREVOST	WIRING DIAGRAM	NO: D060976	PAGE: 11.1	REVISION 04

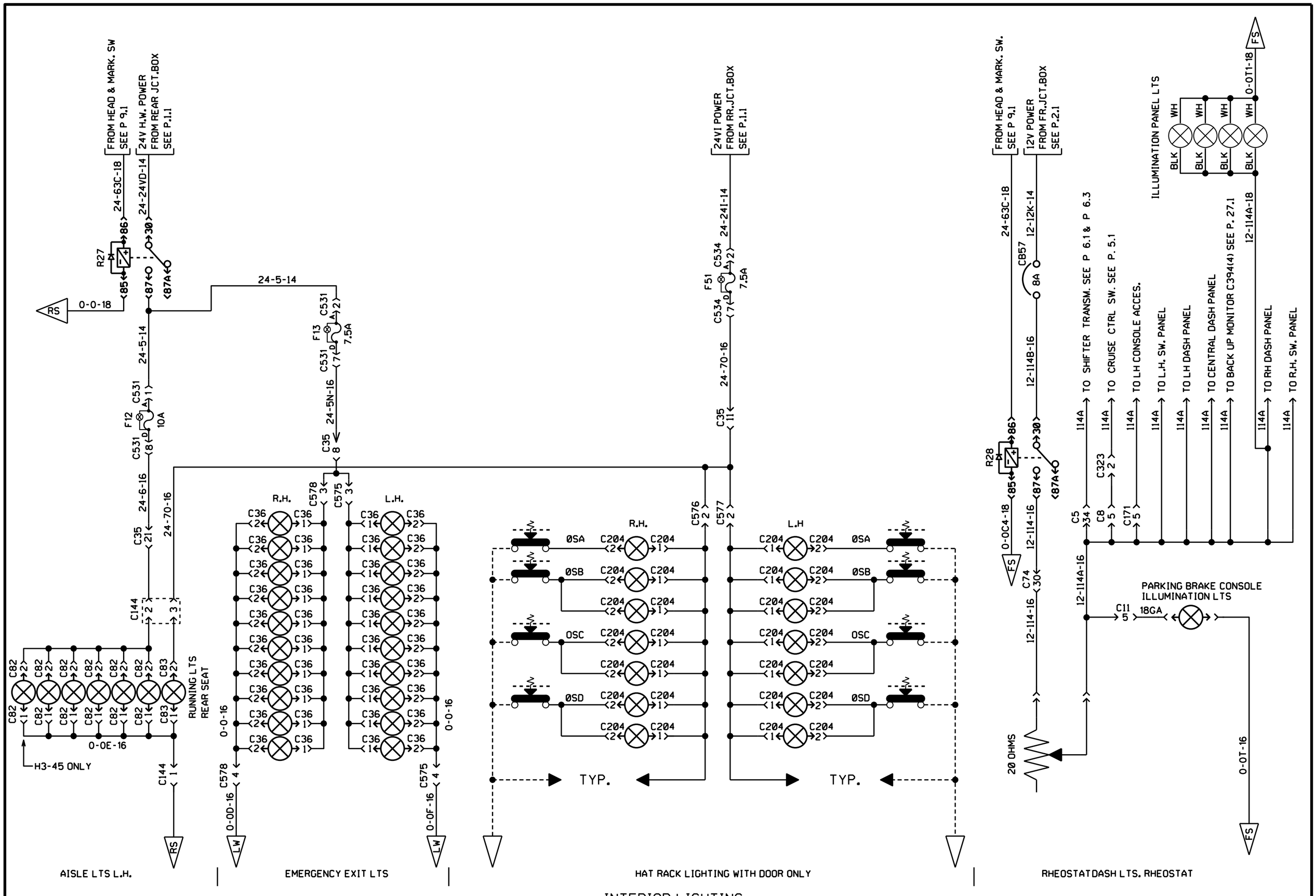

INTERIOR LIGHTING

PREVOST	WIRING DIAGRAM	NO: D060976	PAGE: 11.2	REVISION 00

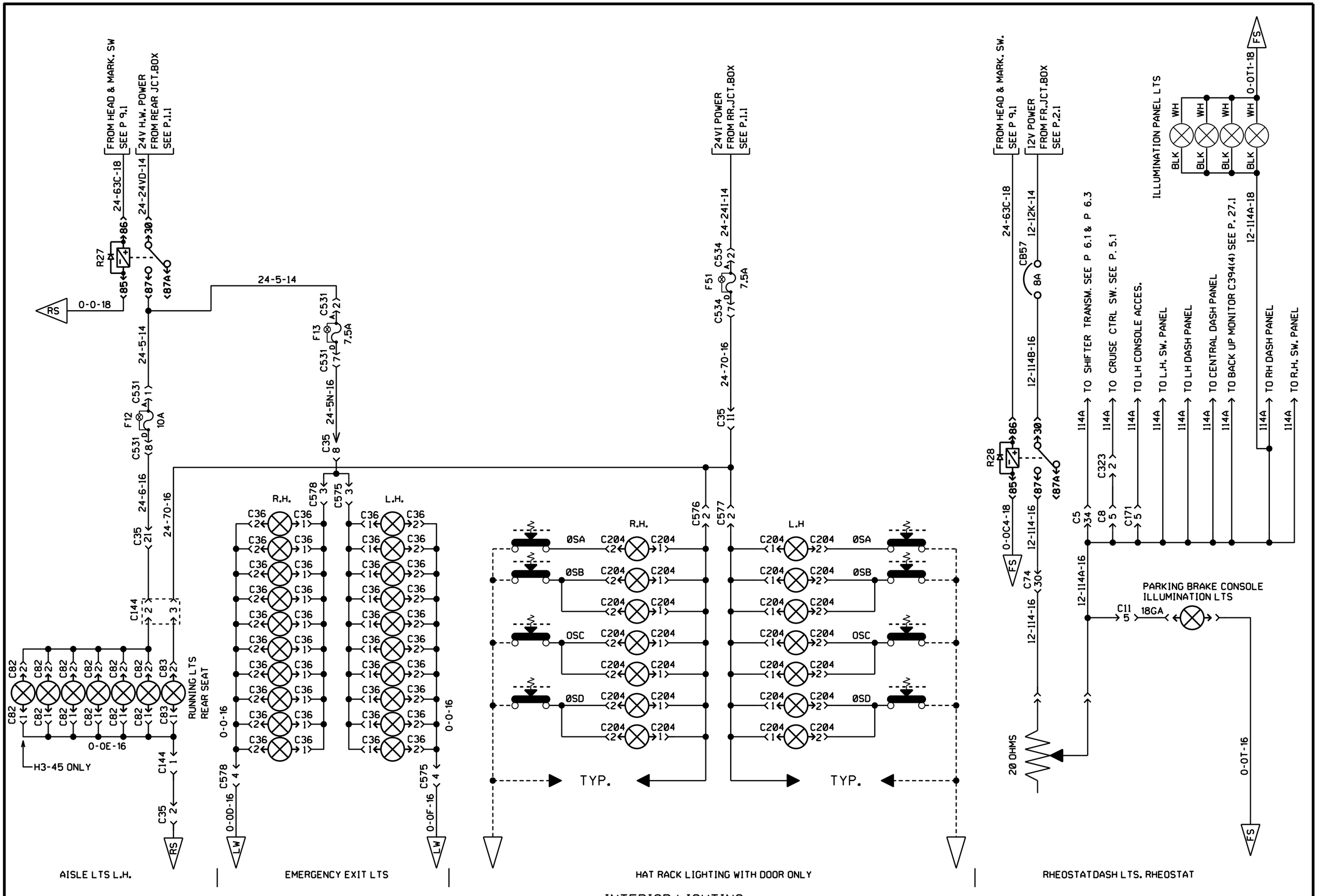

INTERIOR LIGHTING

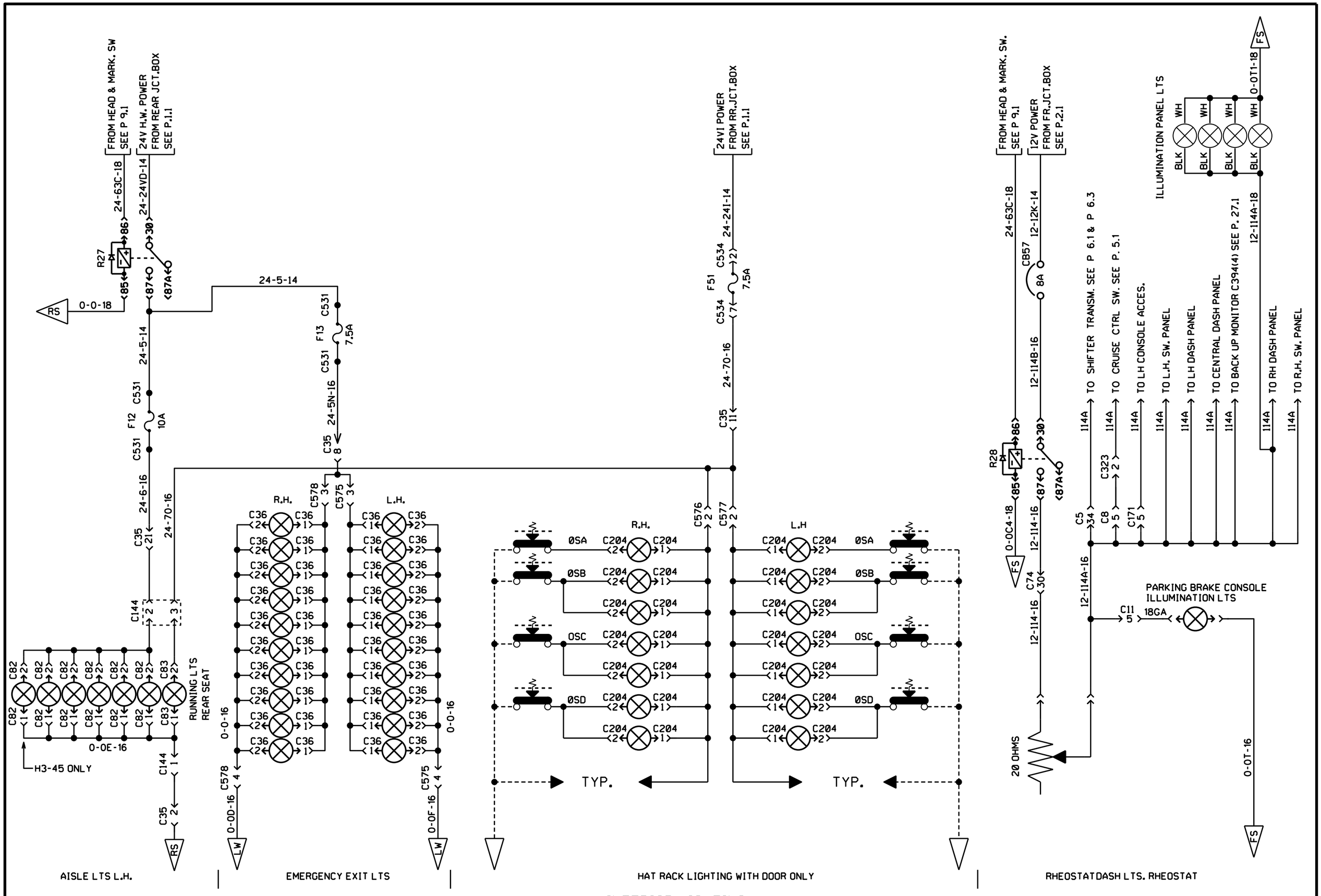

INTERIOR LIGHTING

PREVOST	WIRING DIAGRAM	NO: D060976	PAGE: 11.2	REVISION 04

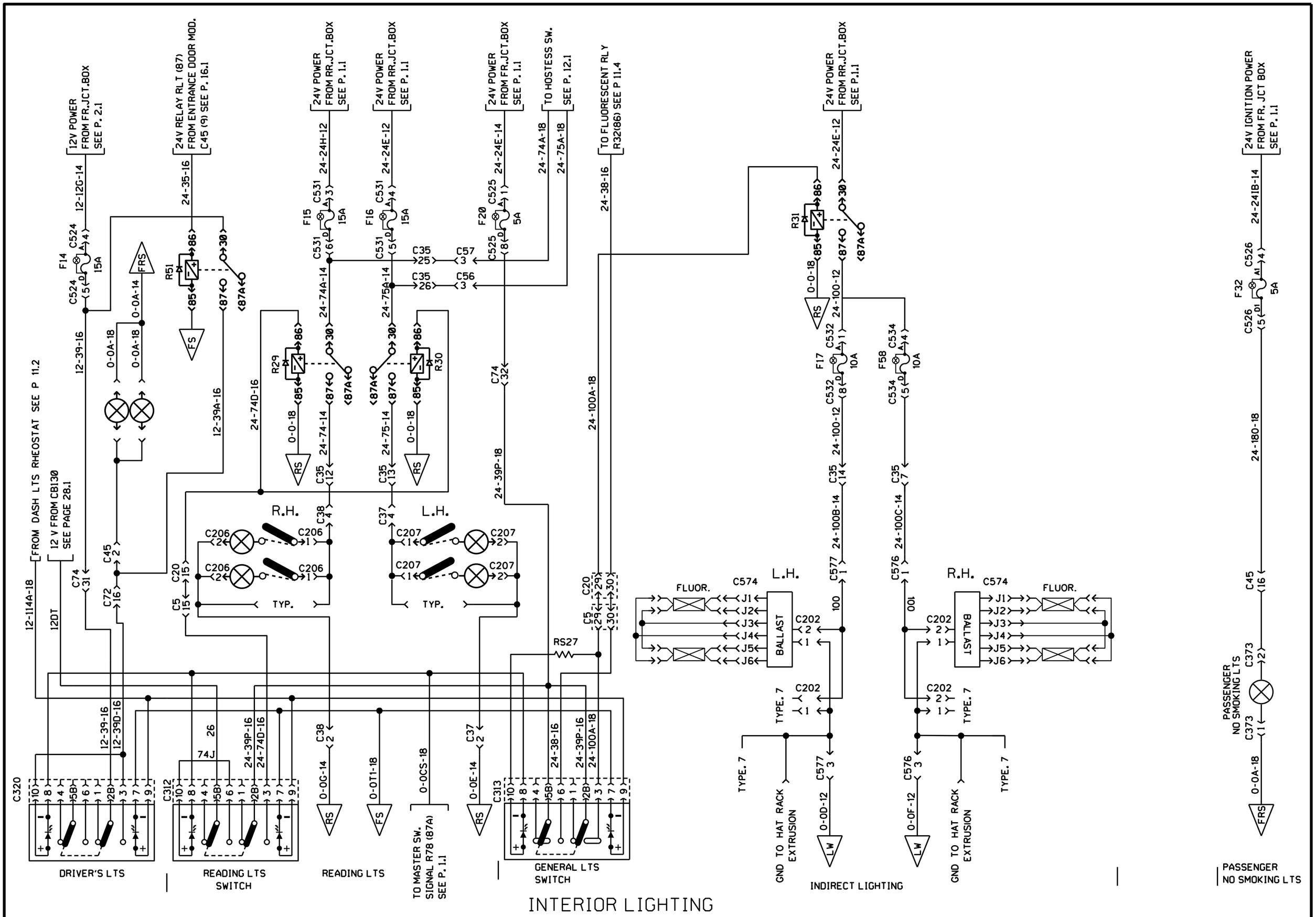

INTERIOR LIGHTING

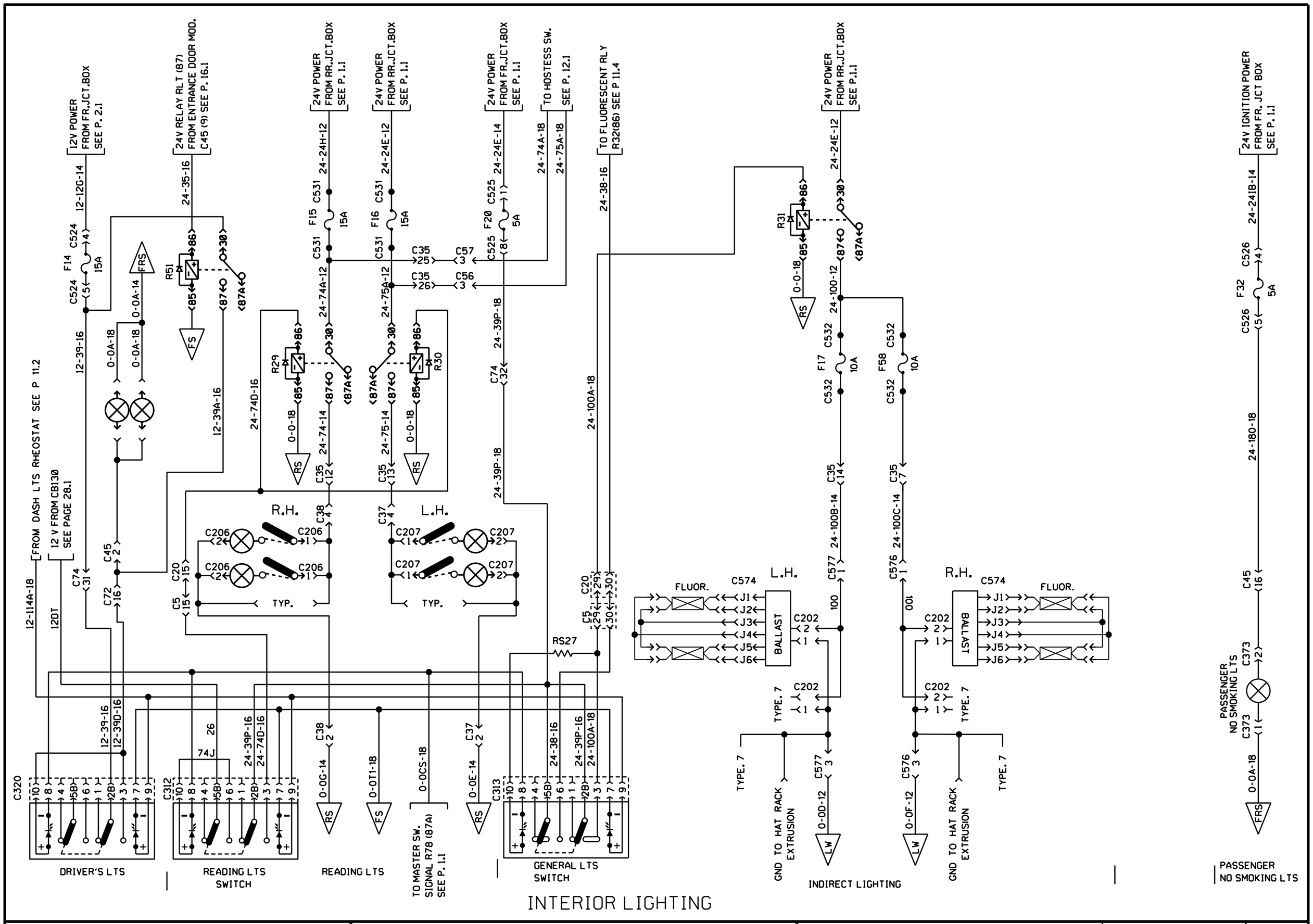

INTERIOR LIGHTING

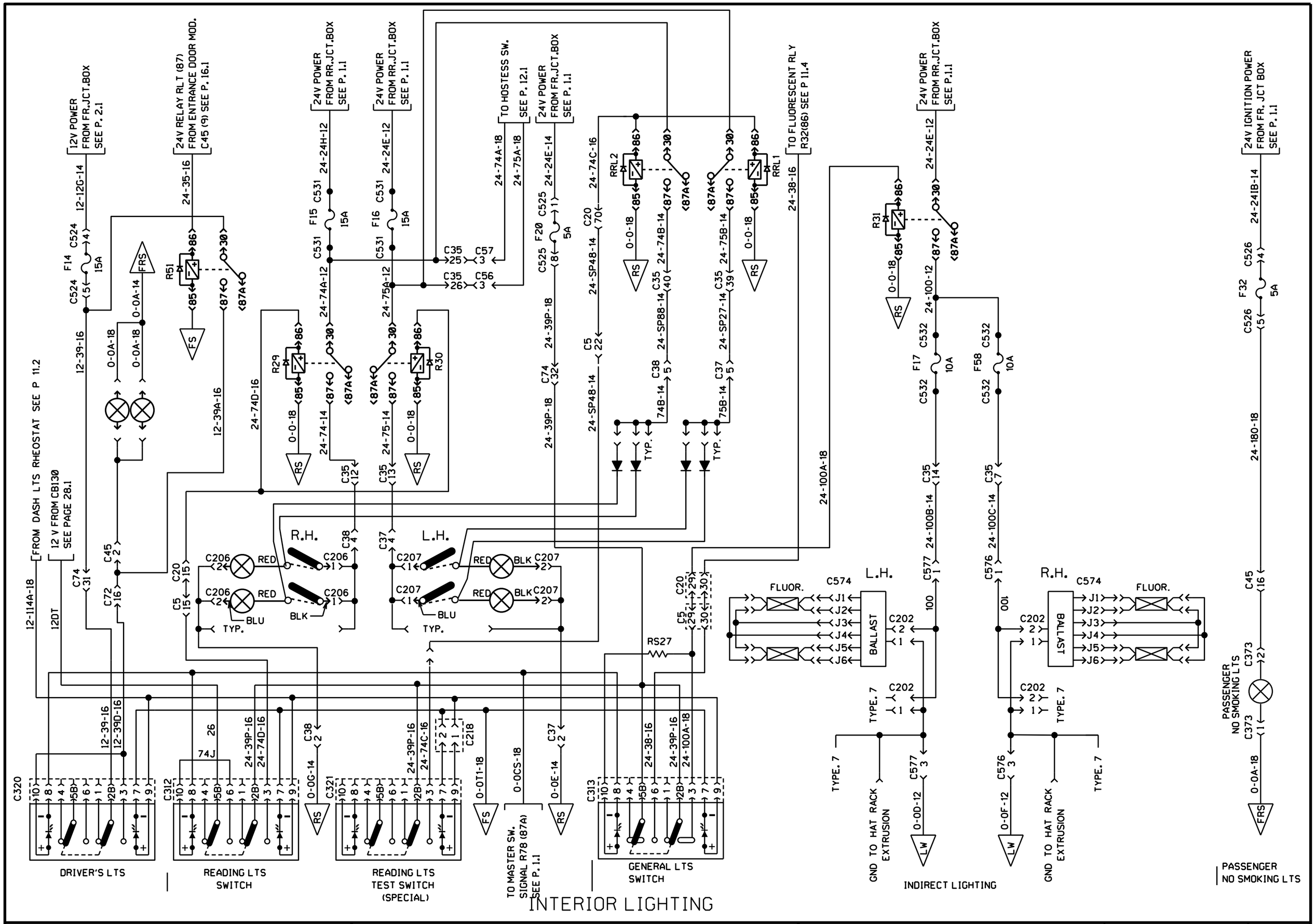

PREVOST	WIRING DIAGRAM	NO: D060976	PAGE: 11.3SP1	REVISION 00

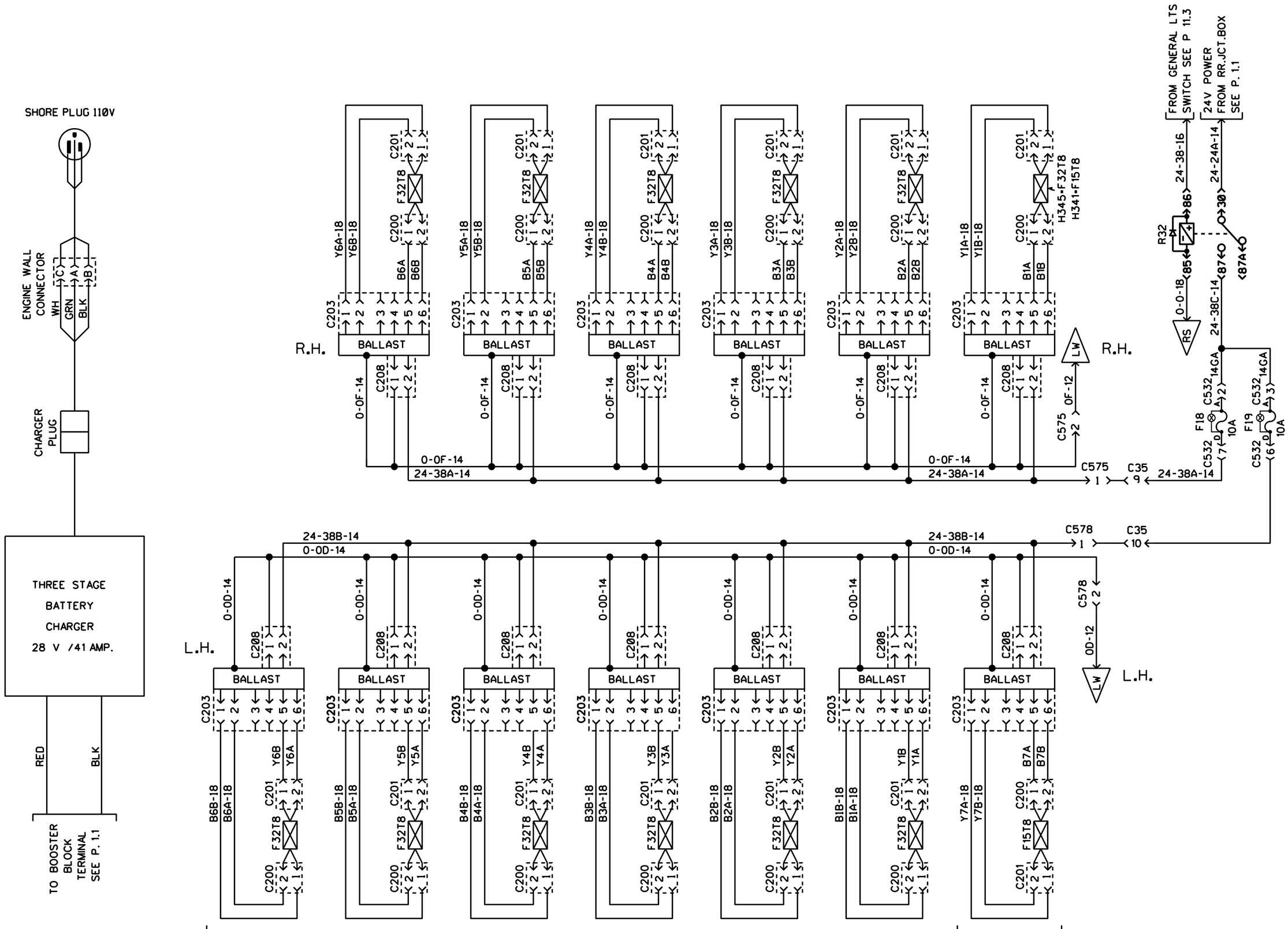

BATTERY CHARGER OR IN-STATION LIGHTING

24V FLUORESCENT INTERIOR LIGHTING

H3-41 & H3-45

H3-45 ONLY

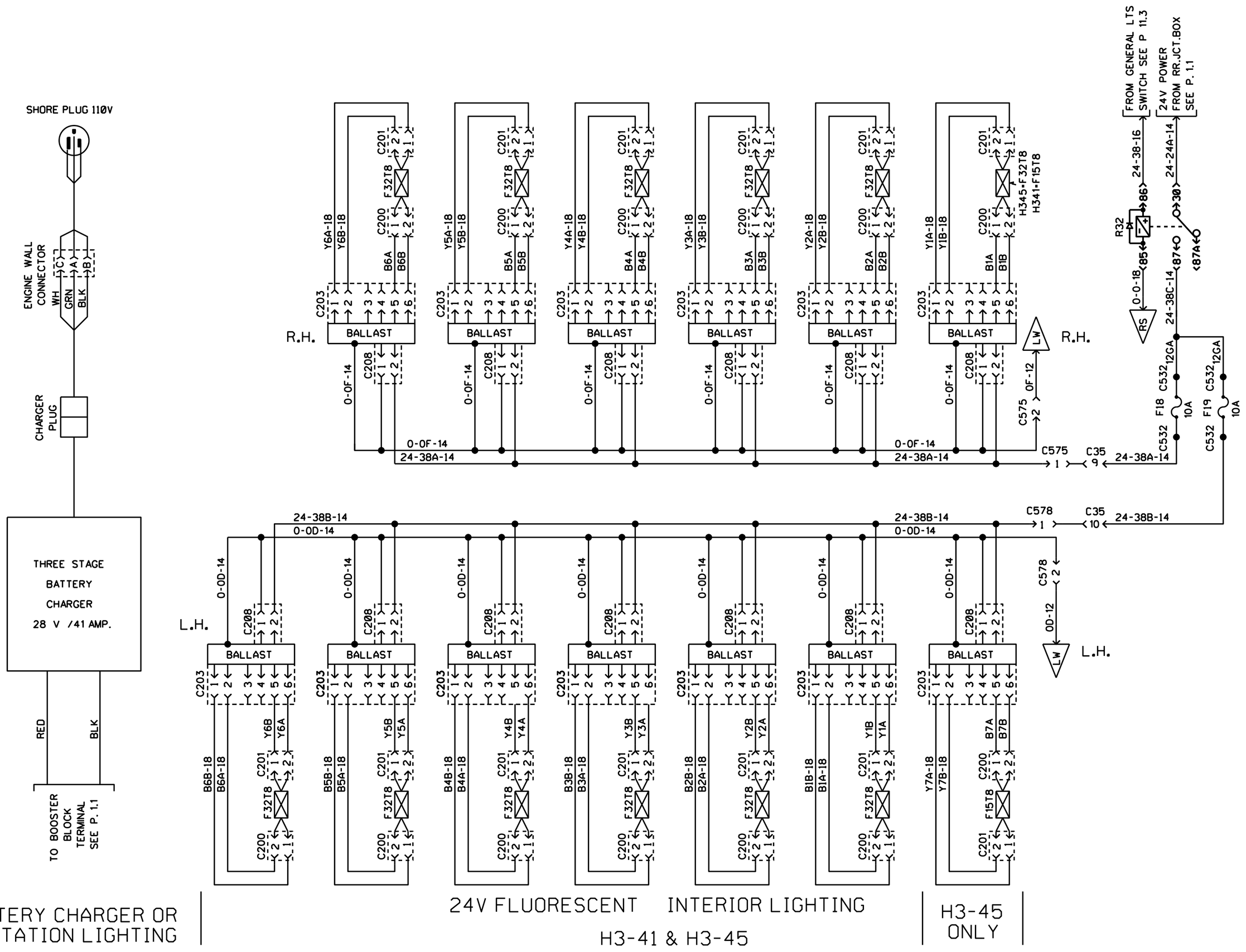

PREVOST	WIRING DIAGRAM	NO: D060976	PAGE: 11.4	REVISION 04

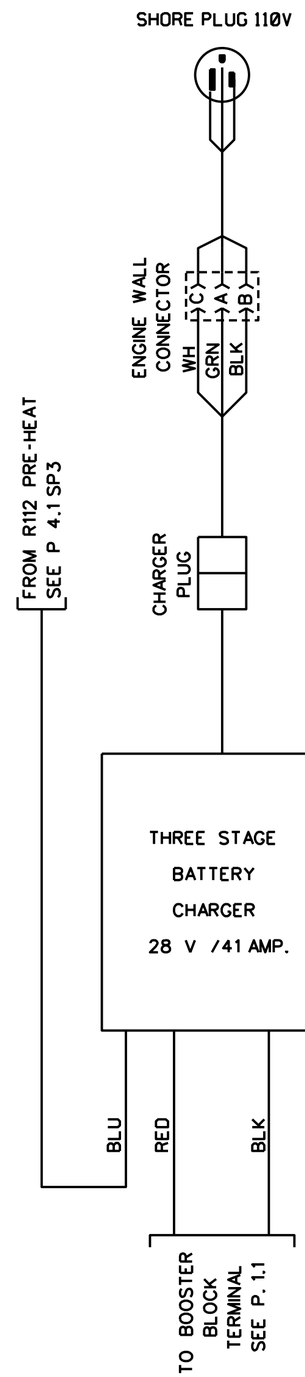

BATTERY CHARGER OR
IN-STATION LIGHTING

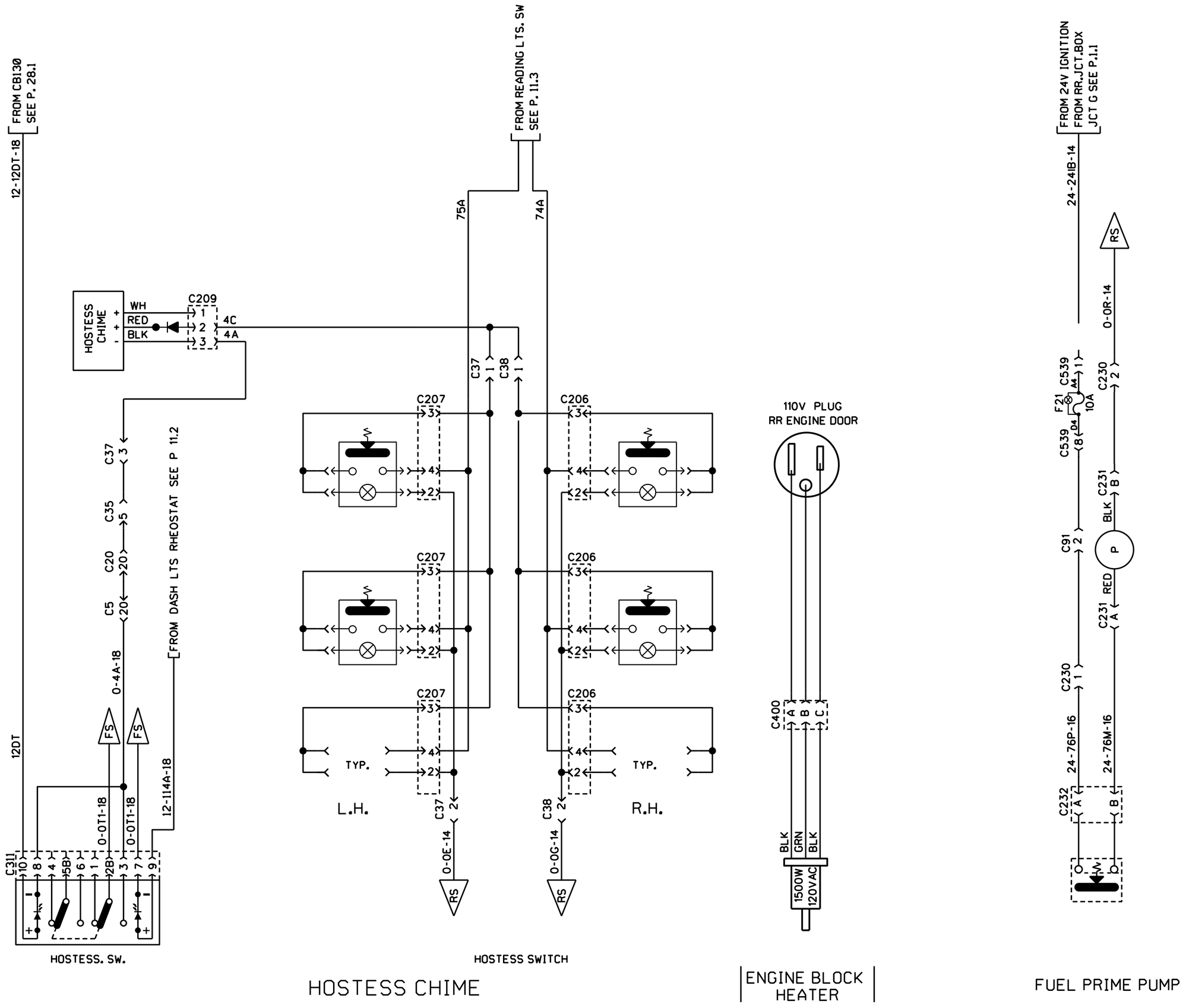

HOSTESS CHIME

ENGINE BLOCK HEATER

FUEL PRIME PUMP

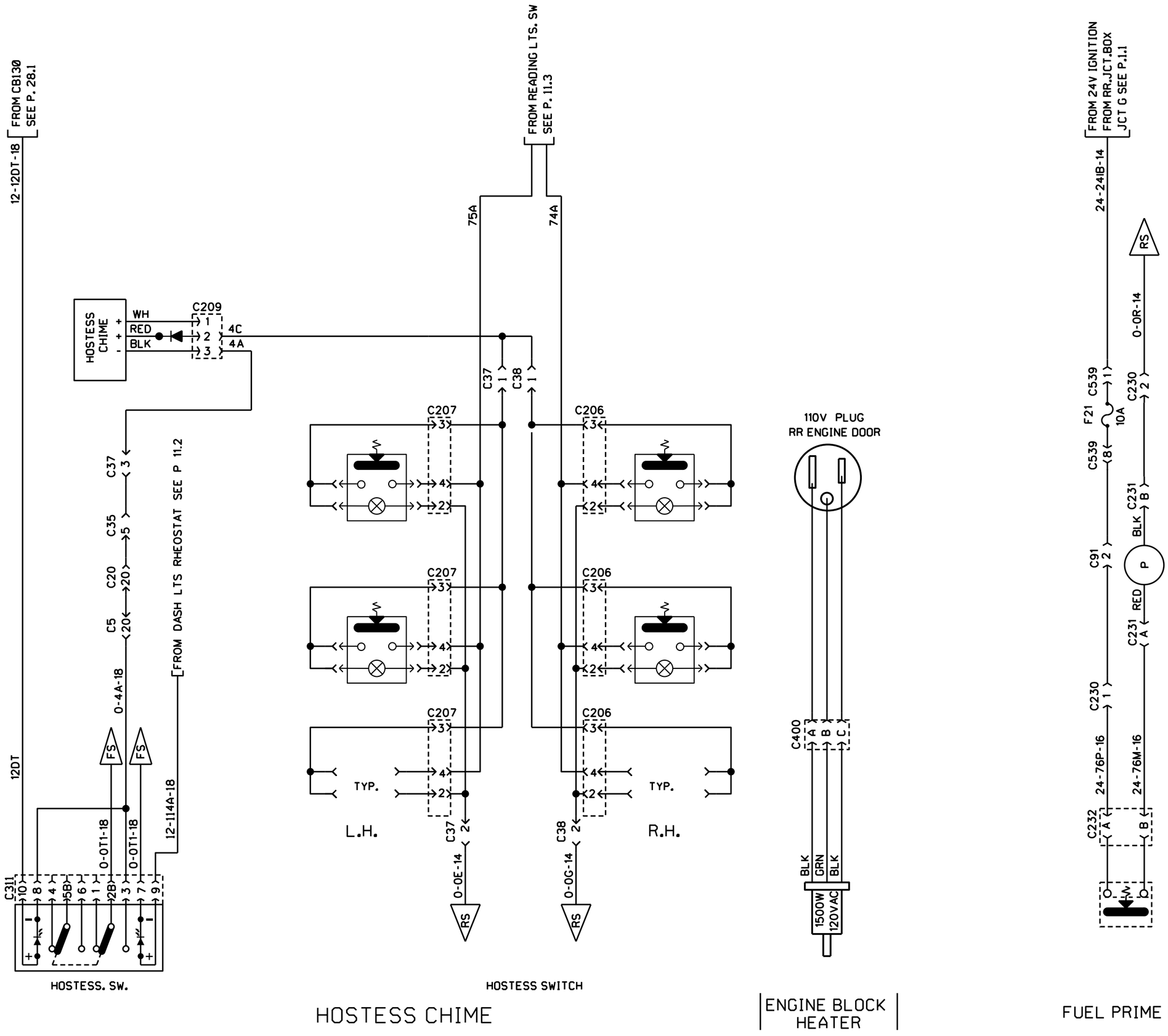

HOSTESS CHIME

ENGINE BLOCK HEATER

FUEL PRIME PUMP

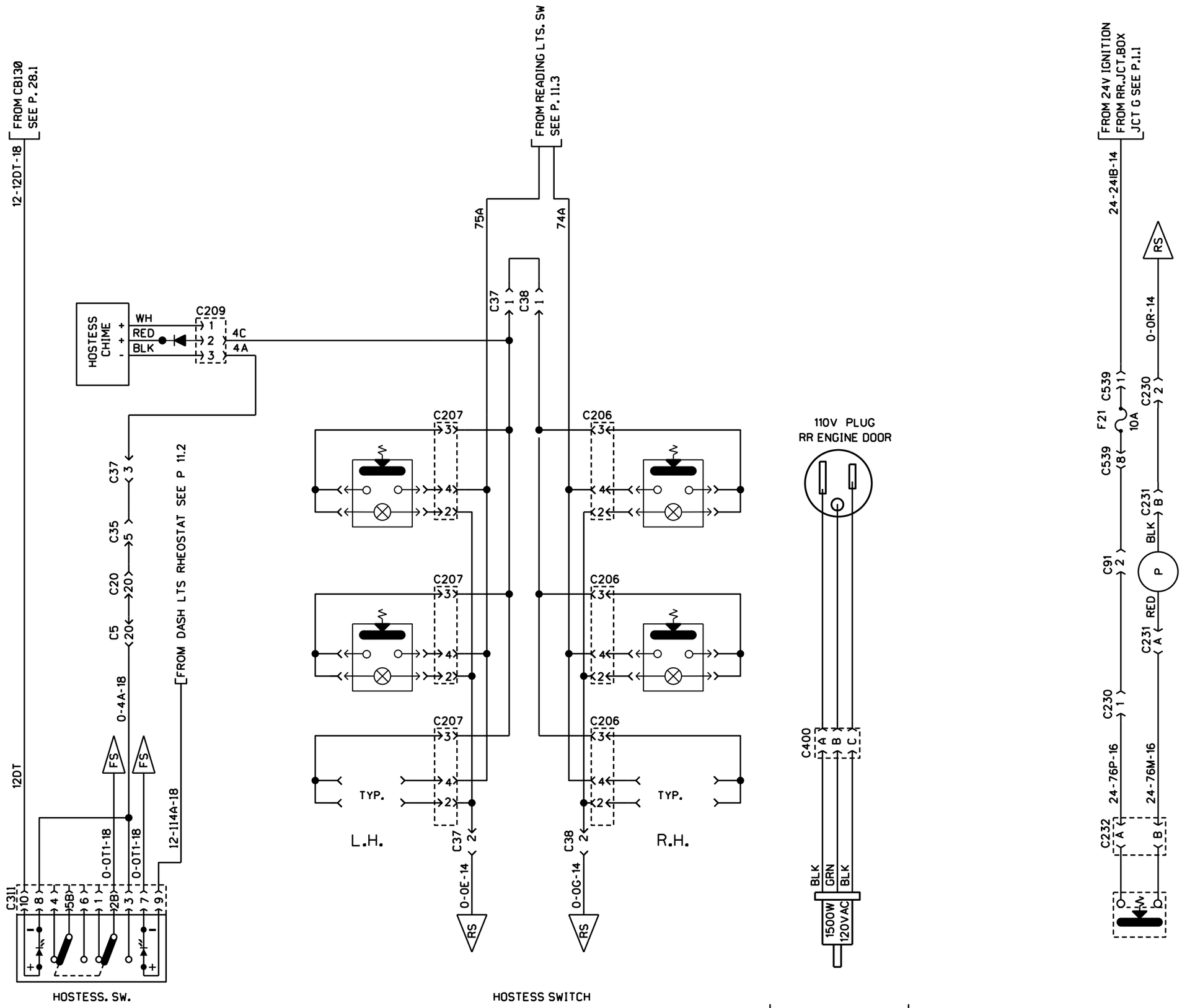

PREVOST	WIRING DIAGRAM	NO: D060976	PAGE: 12.1	REVISION 07

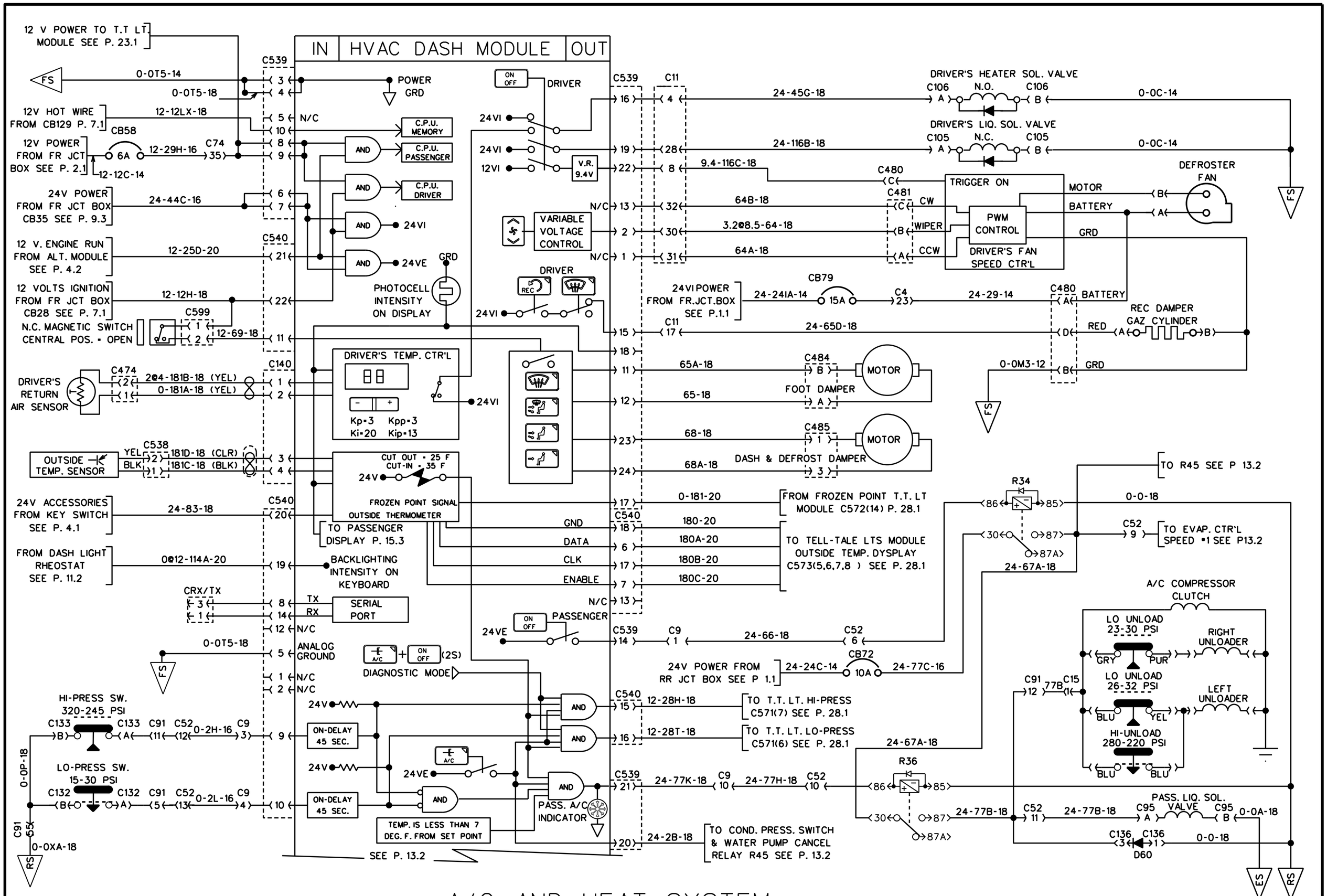

A/C AND HEAT SYSTEM

FAIT A PARTIR DE D060938 P15.2 REV 12

PREVOST	WIRING DIAGRAM	NO: D060976	PAGE: 13.1	REVISION 00

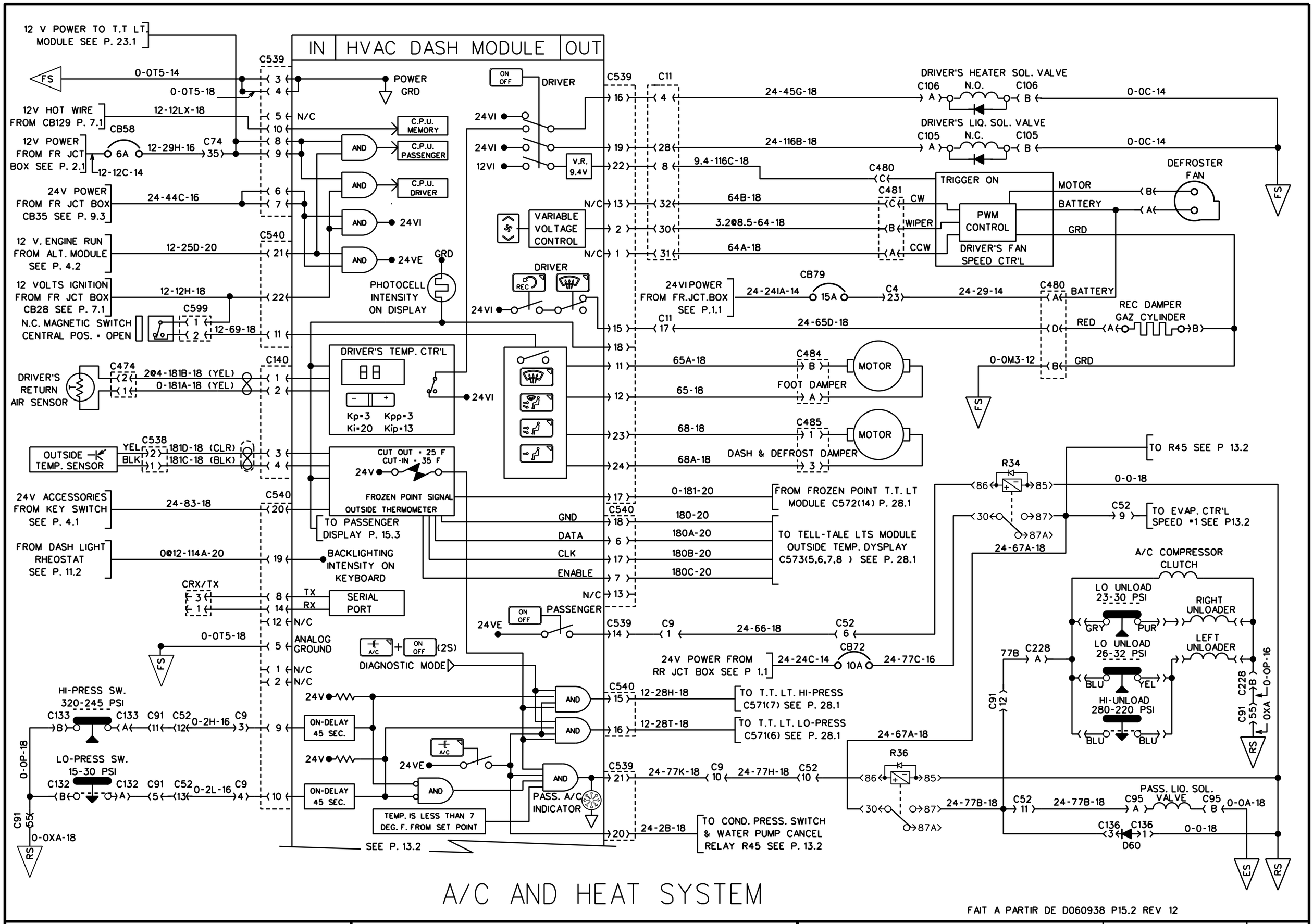

A/C AND HEAT SYSTEM

FAIT A PARTIR DE D060938 P15.2 REV 12

PREVOST	WIRING DIAGRAM	NO: D060976	PAGE: 13.1	REVISION 08

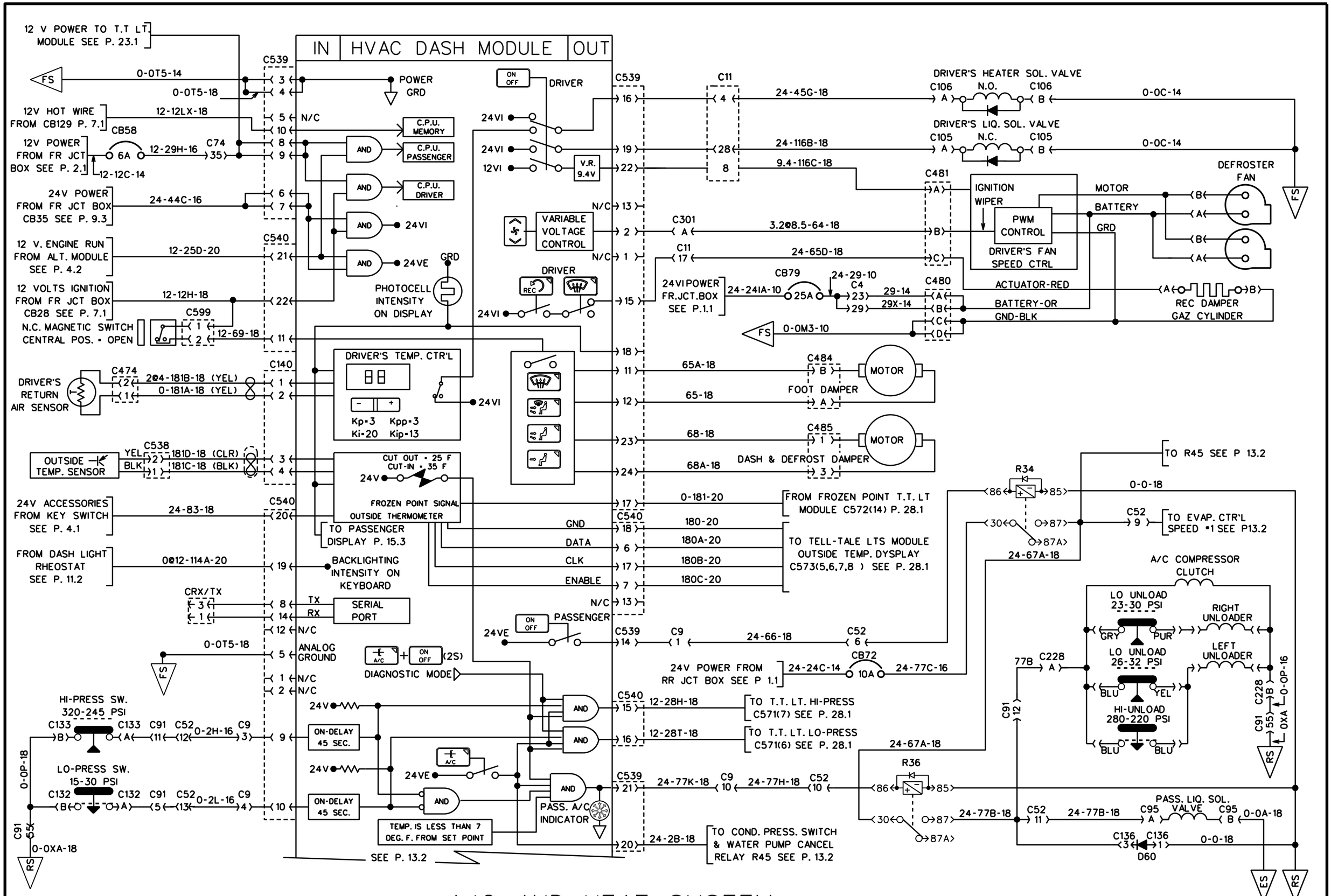

A/C AND HEAT SYSTEM

FAIT A PARTIR DE D060938 P15.2 REV 12

PREVOST	WIRING DIAGRAM	NO: D060976	PAGE: 13.1	REVISION 12

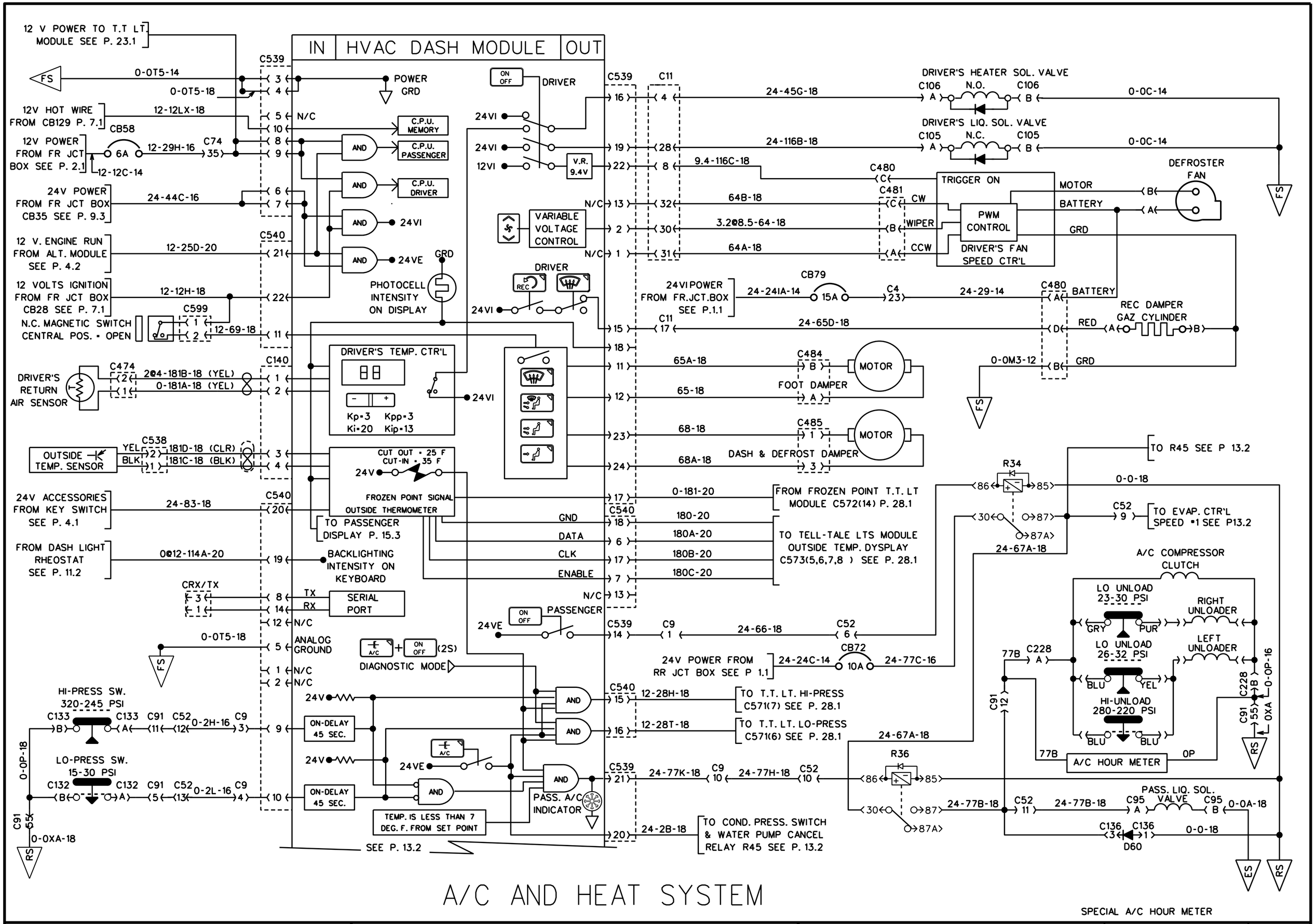

A/C AND HEAT SYSTEM

PREVOST	WIRING DIAGRAM	NO: D060976	PAGE: 13.1sp1	REVISION 00

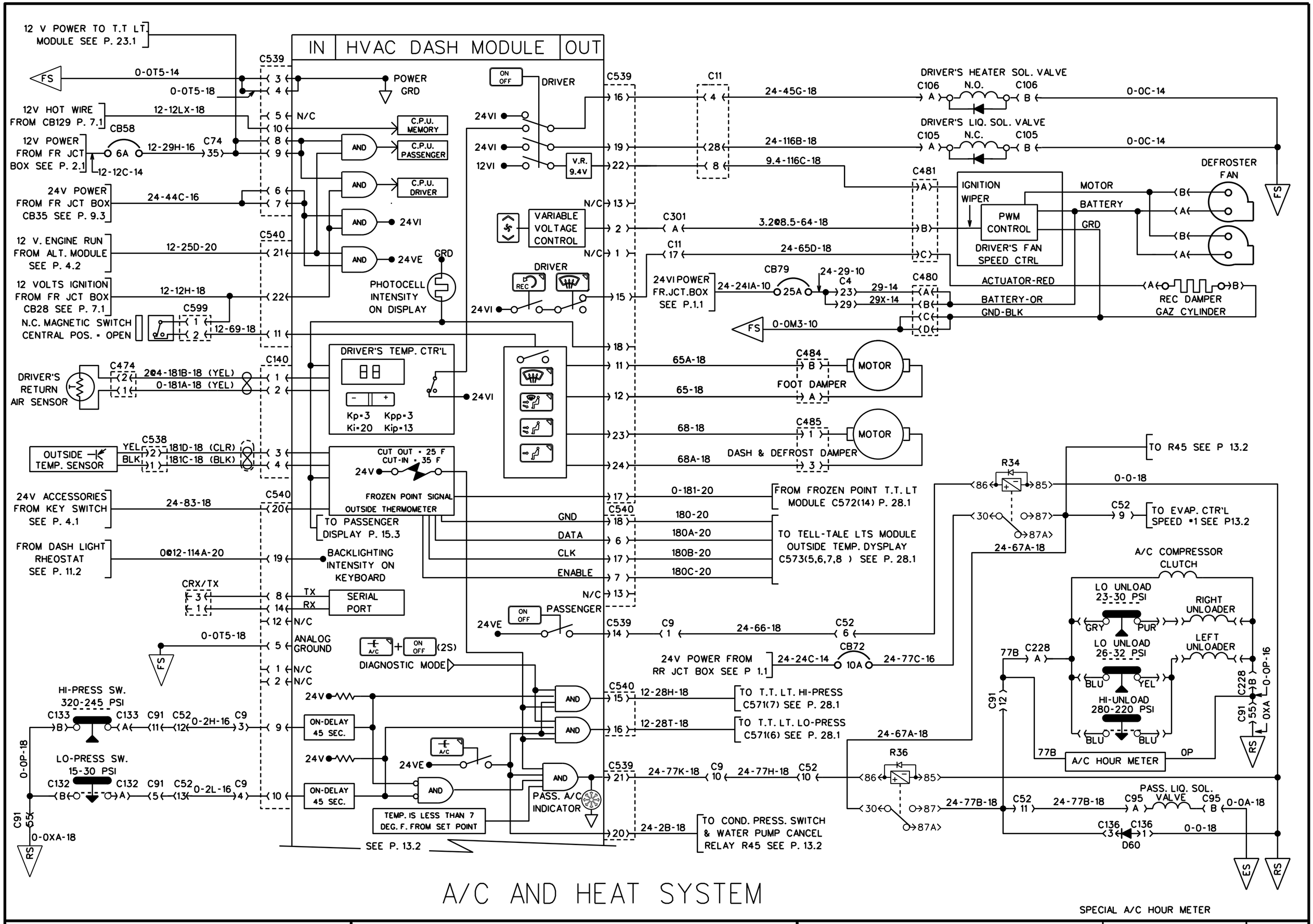

A/C AND HEAT SYSTEM

PREVOST	WIRING DIAGRAM	NO: D060976	PAGE: 13.1sp1	REVISION 12

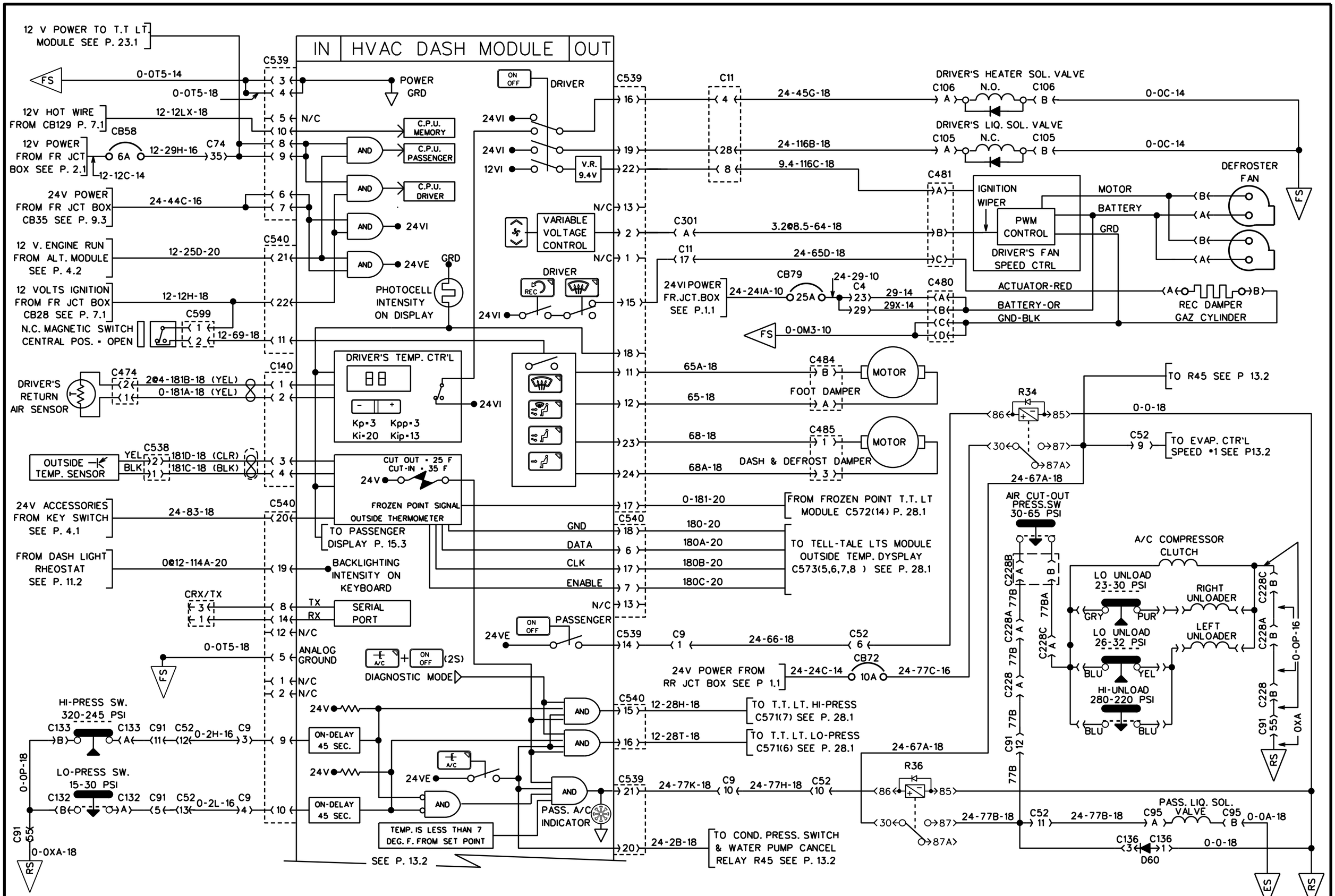

A/C AND HEAT SYSTEM

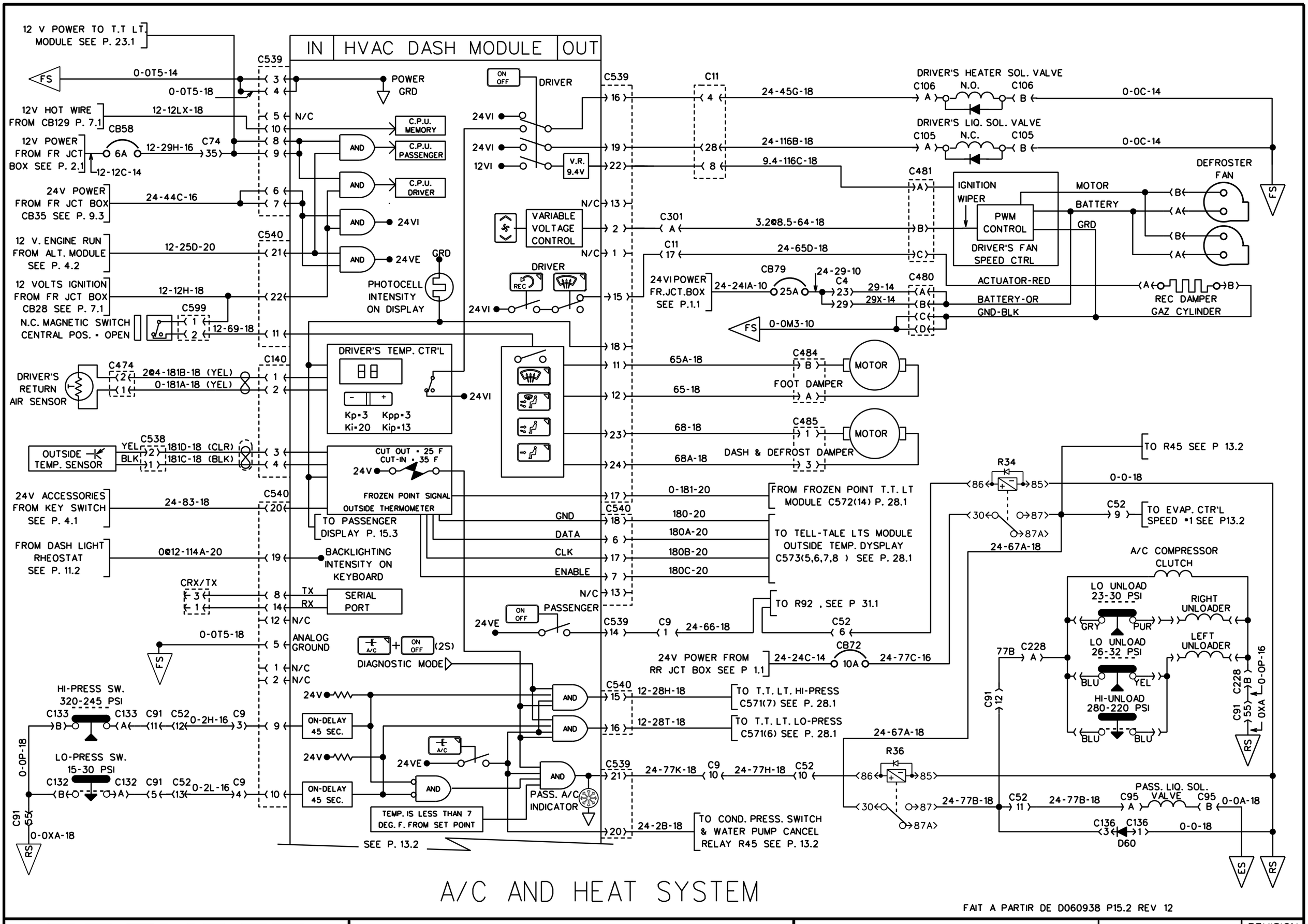

A/C AND HEAT SYSTEM

FAIT A PARTIR DE D060938 P15.2 REV 12

PREVOST	WIRING DIAGRAM	NO: D060976	PAGE: 13.1 SP3	REVISION 00

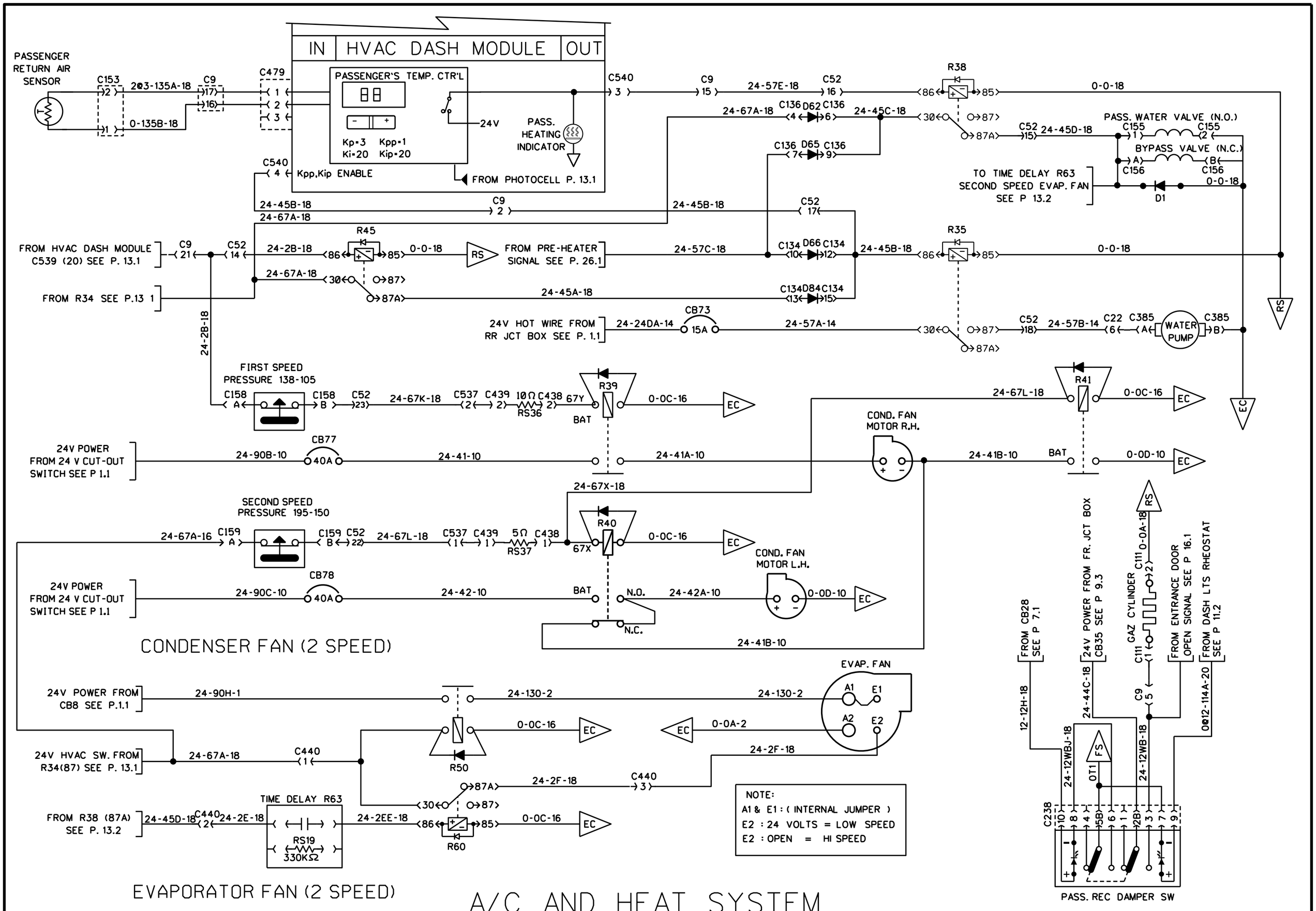

A/C AND HEAT SYSTEM

PREVOST	WIRING DIAGRAM	NO: D060976	PAGE: 13.2	REVISION 00

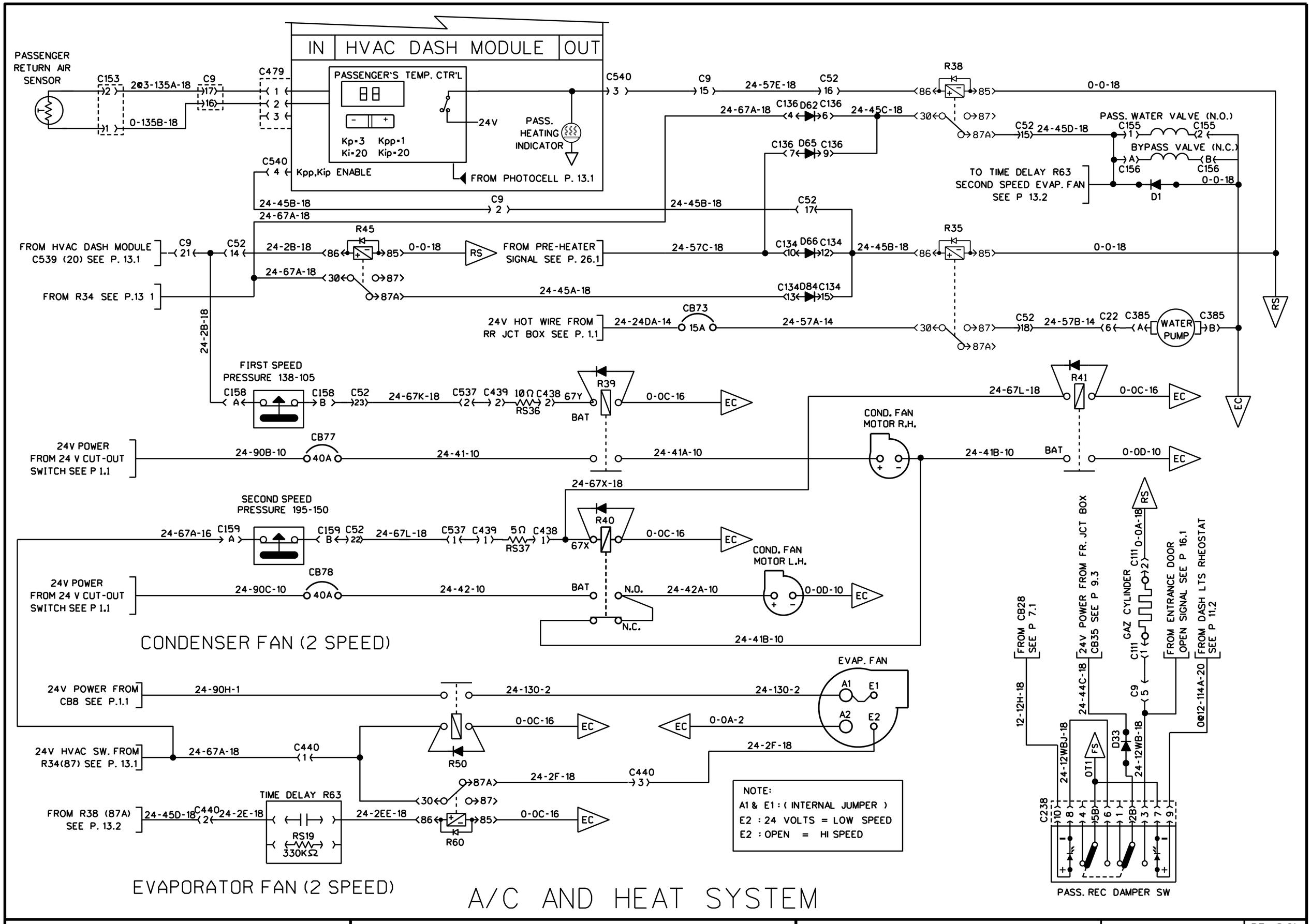

PREVOST	WIRING DIAGRAM	NO: D060976	PAGE: 13.2	REVISION 02

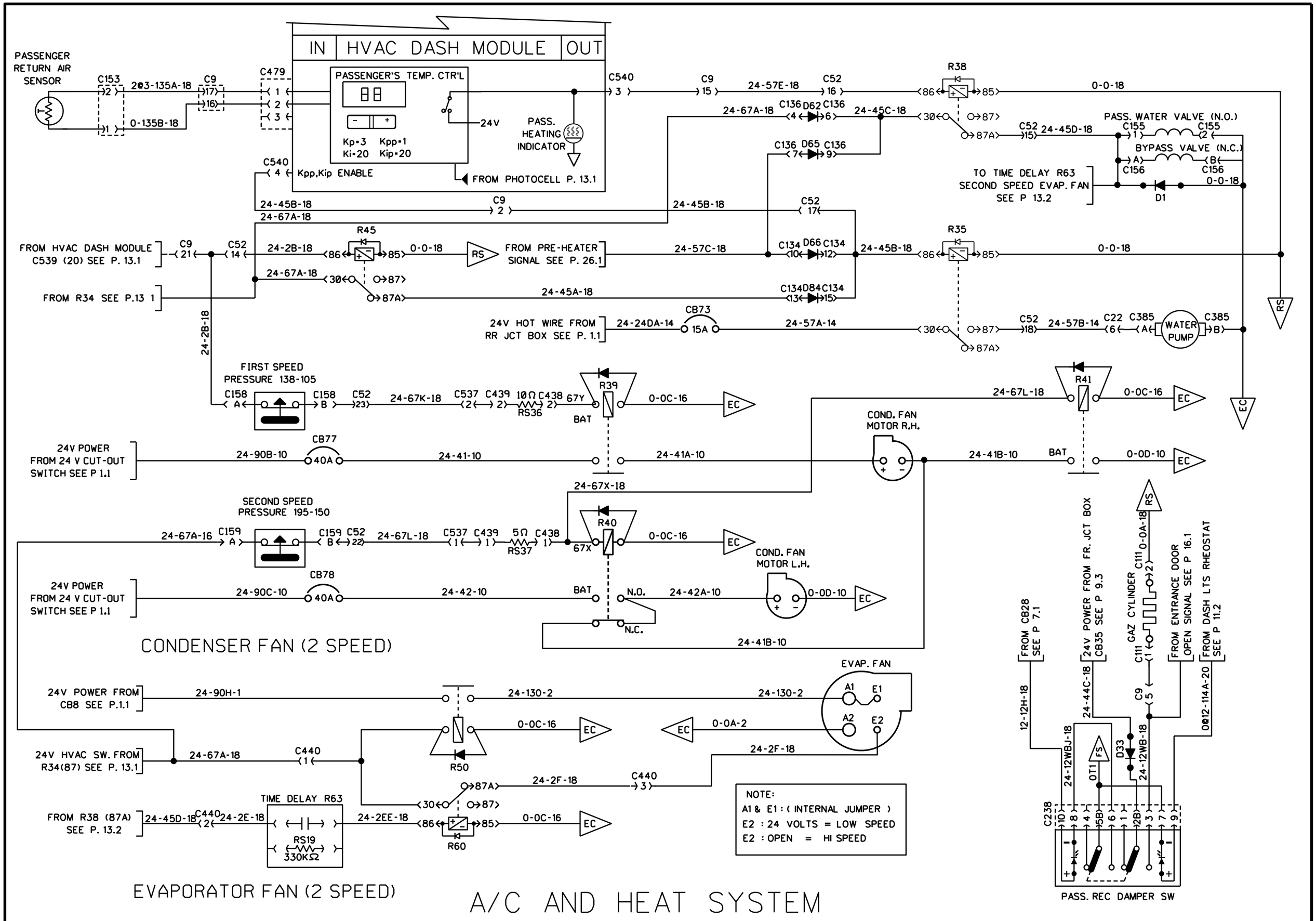

PREVOST	WIRING DIAGRAM	NO: D060976	PAGE: 13.2	REVISION 10

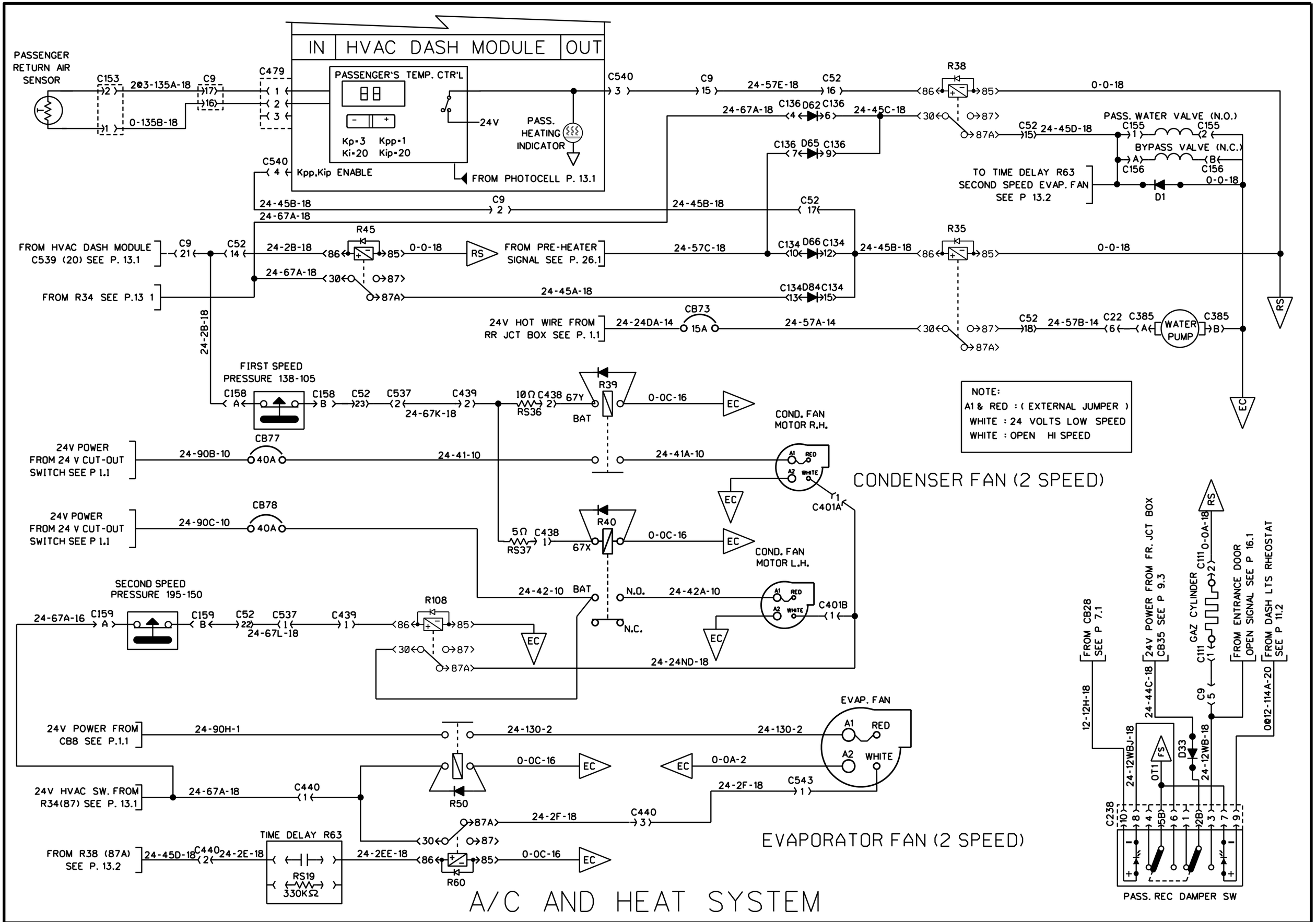

PREVOST	WIRING DIAGRAM	NO: D060976	PAGE: 13.2sp1	REVISION 00

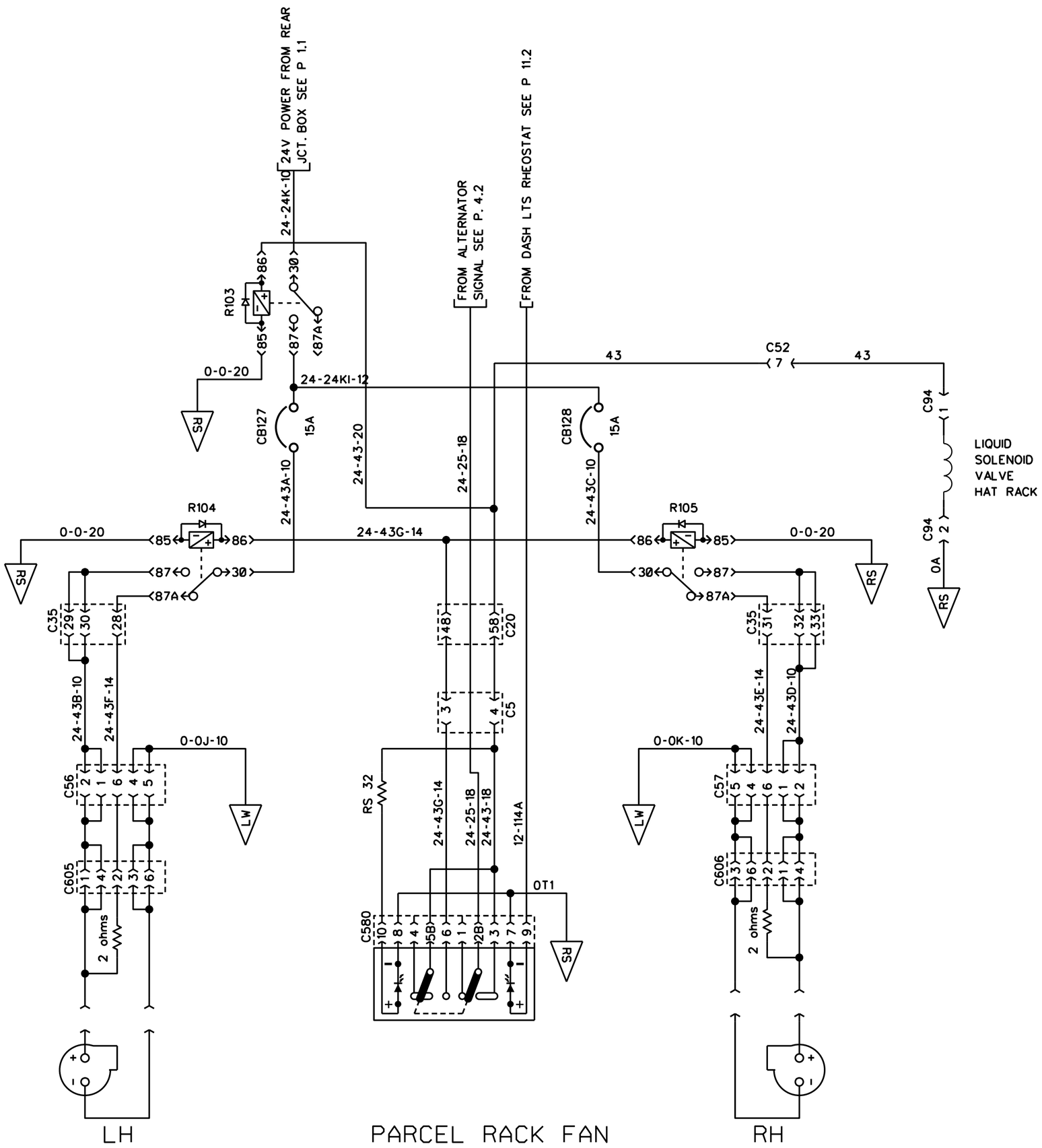

PREVOST	WIRING DIAGRAM	NO: D060976	PAGE: 13.3	REVISION 00

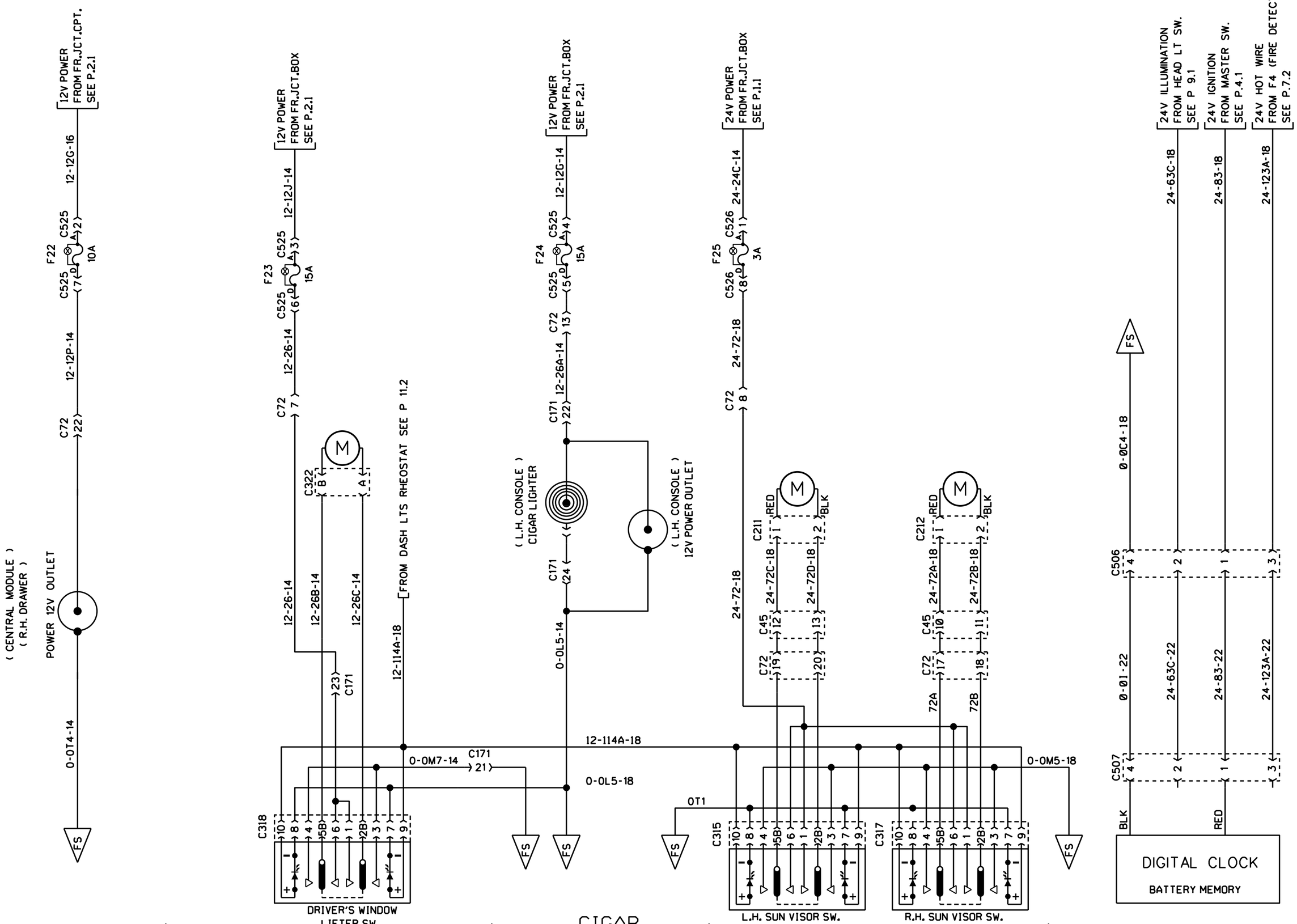

POWER 12V OUTLET | DRIVER'S WINDOW LIFTER | CIGAR LIGHTER | SUN VISOR | DIGITAL CLOCK

PREVOST	WIRING DIAGRAM	NO: D060976	PAGE: 14.1	REVISION 00

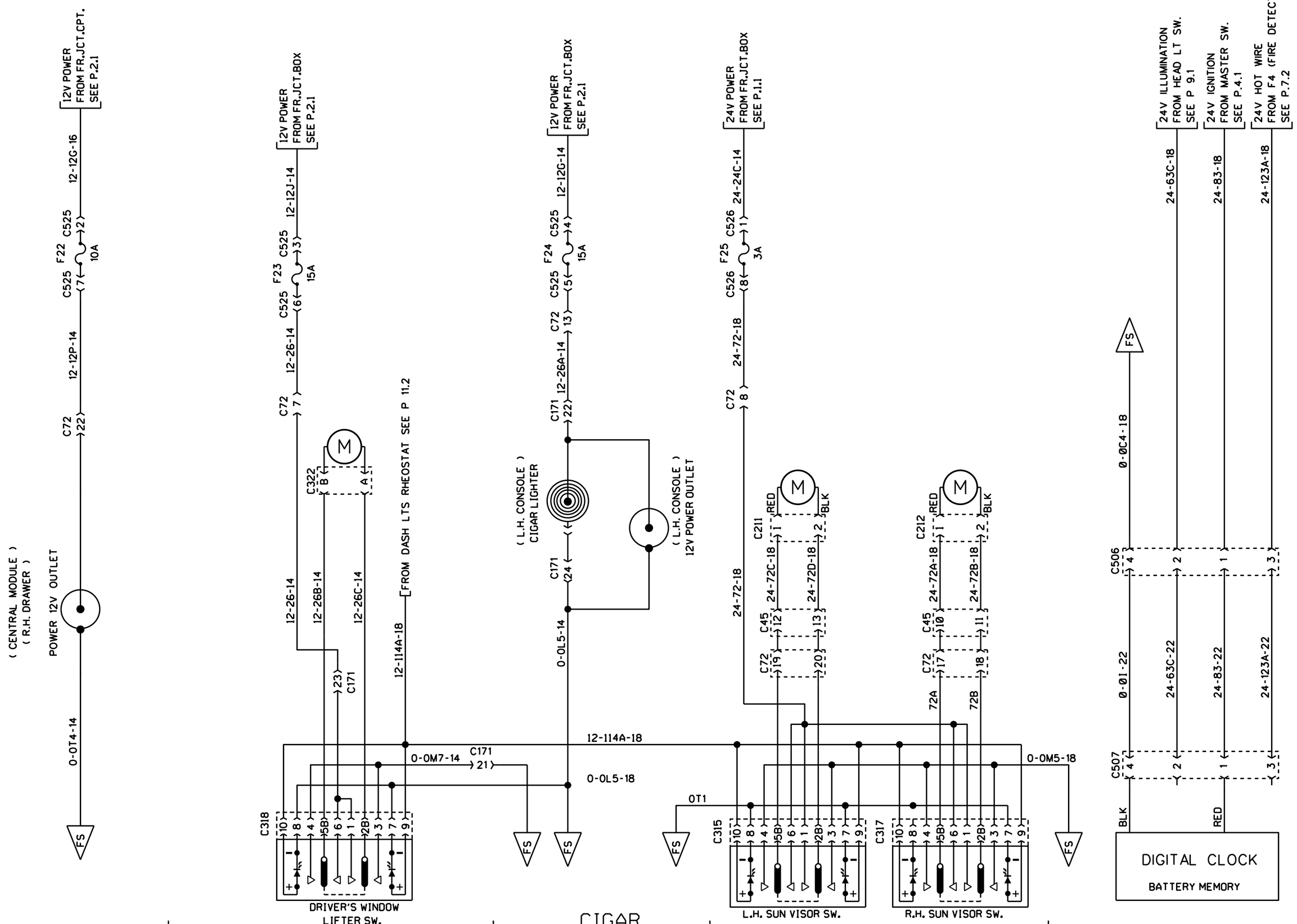

POWER 12V OUTLET | DRIVER'S WINDOW LIFTER | CIGAR LIGHTER | SUN VISOR | DIGITAL CLOCK

PREVOST	WIRING DIAGRAM	NO: D060976	PAGE: 14.1	REVISION 04

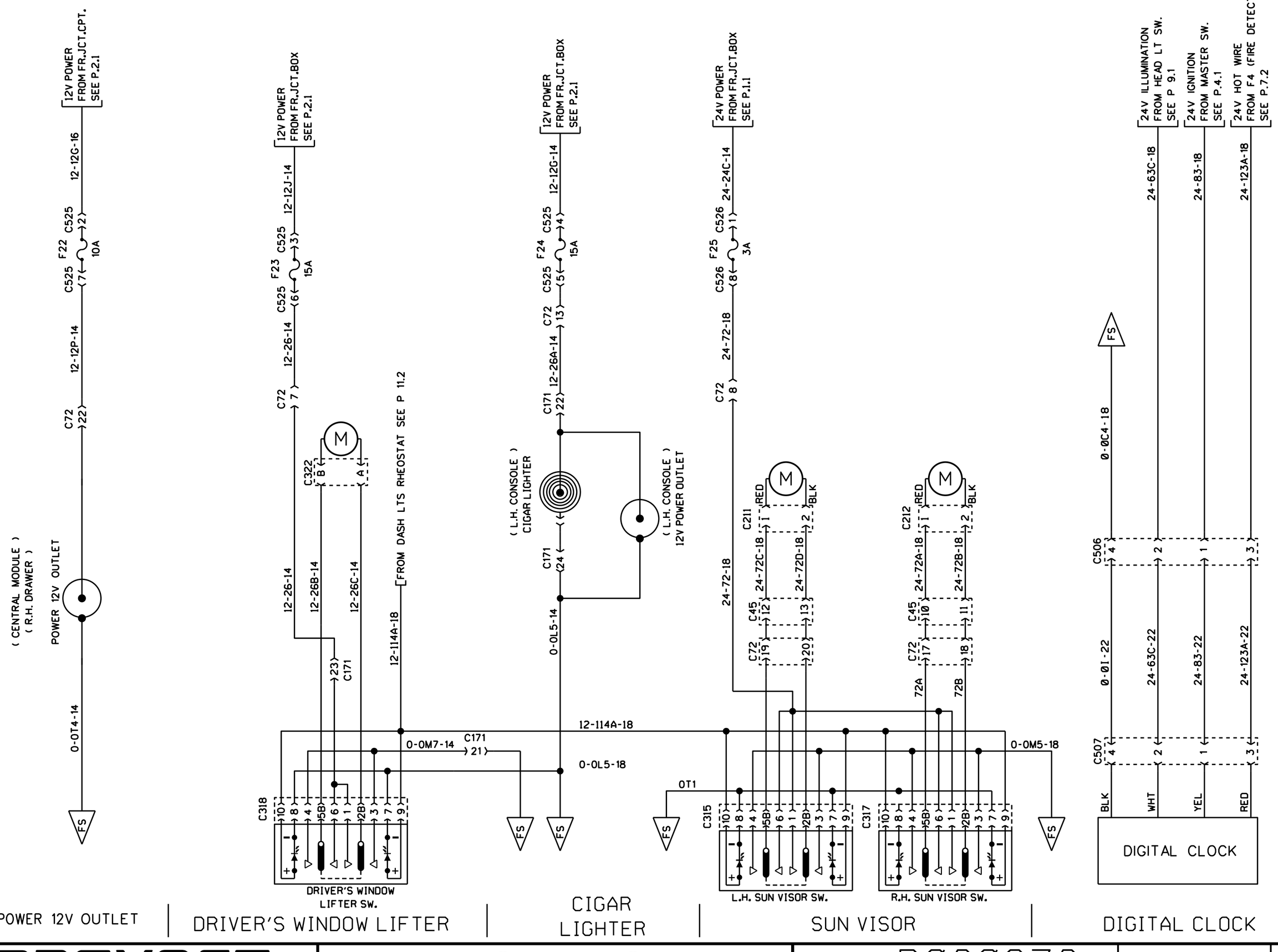

PREVOST	WIRING DIAGRAM	NO: D060976	PAGE: 14.1	REVISION 13

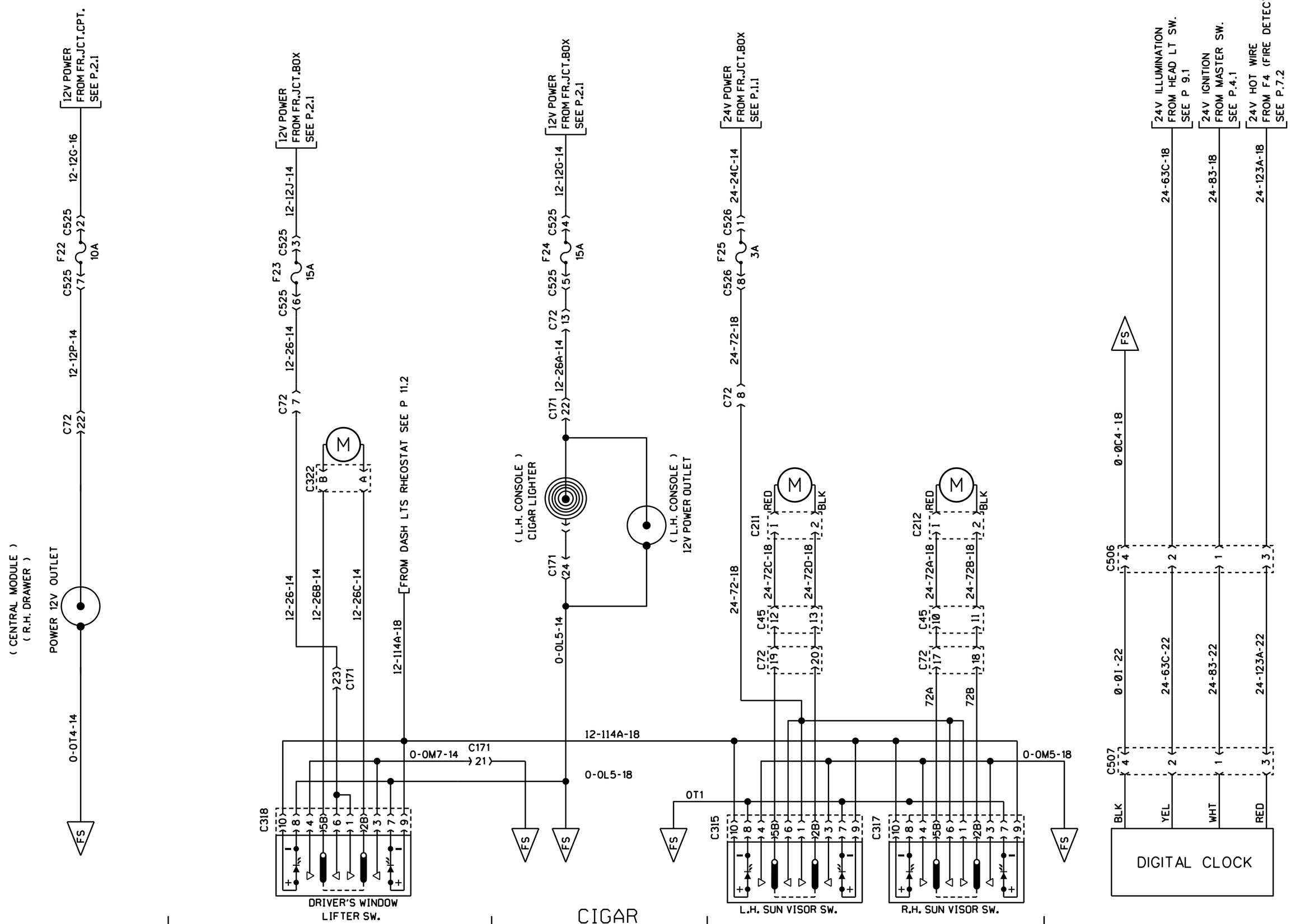

PREVOST	WIRING DIAGRAM	NO: D060976	PAGE: 14.1	REVISION 14

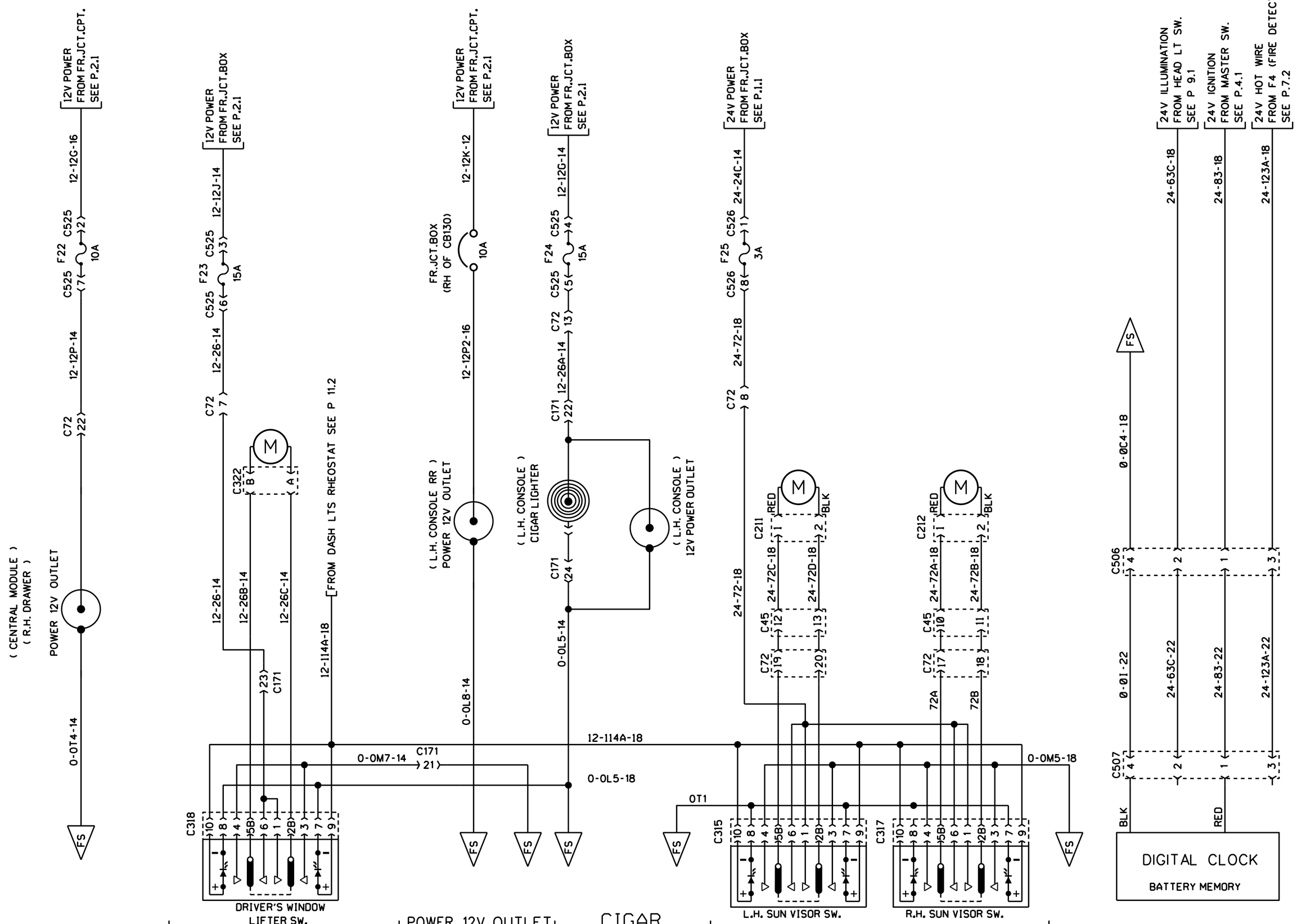

PREVOST	WIRING DIAGRAM	NO: D060976	PAGE: 14.1sp1	REVISION 00

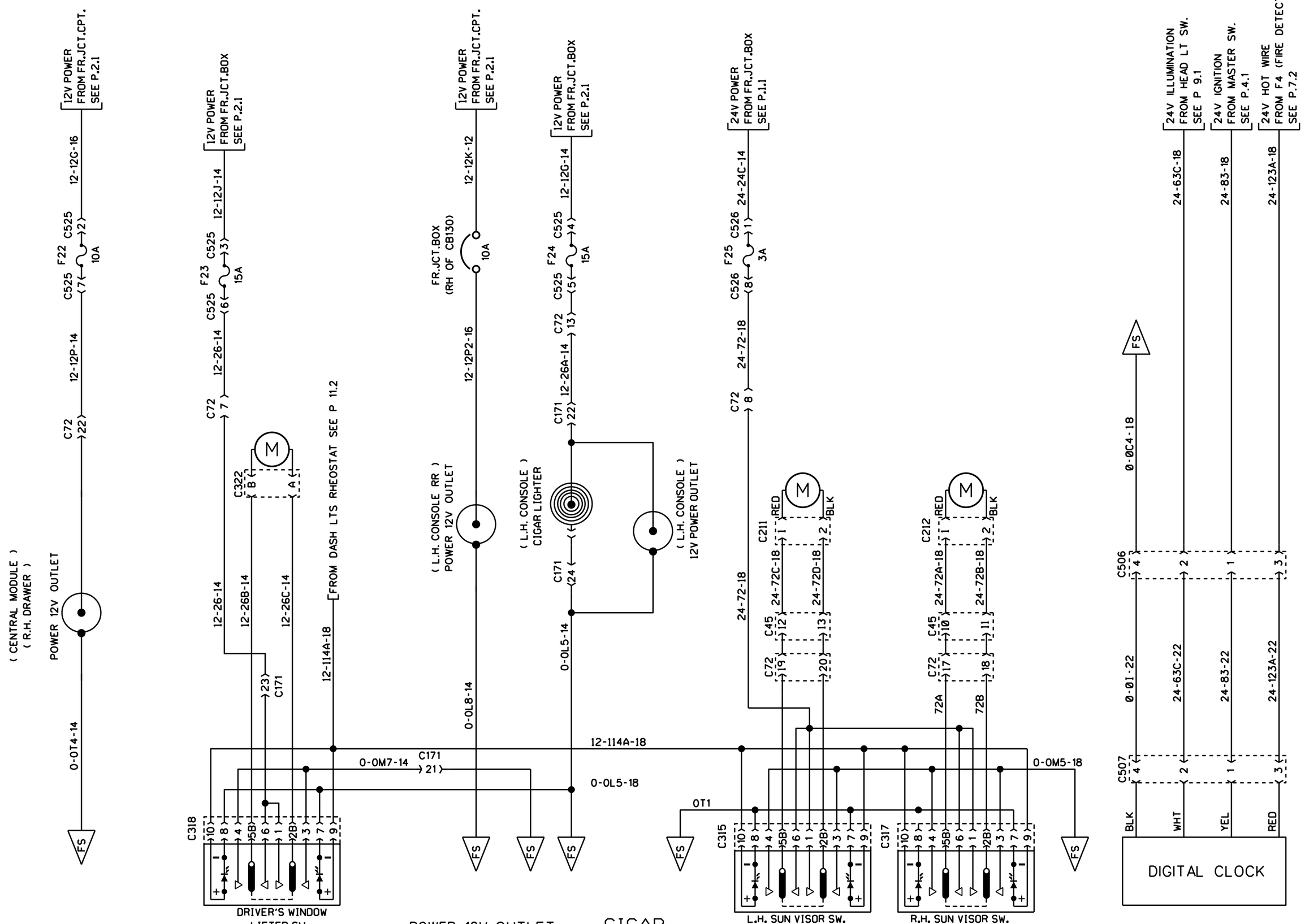

PREVOST	WIRING DIAGRAM	NO: D060976	PAGE: 14.1sp1	REVISION 13

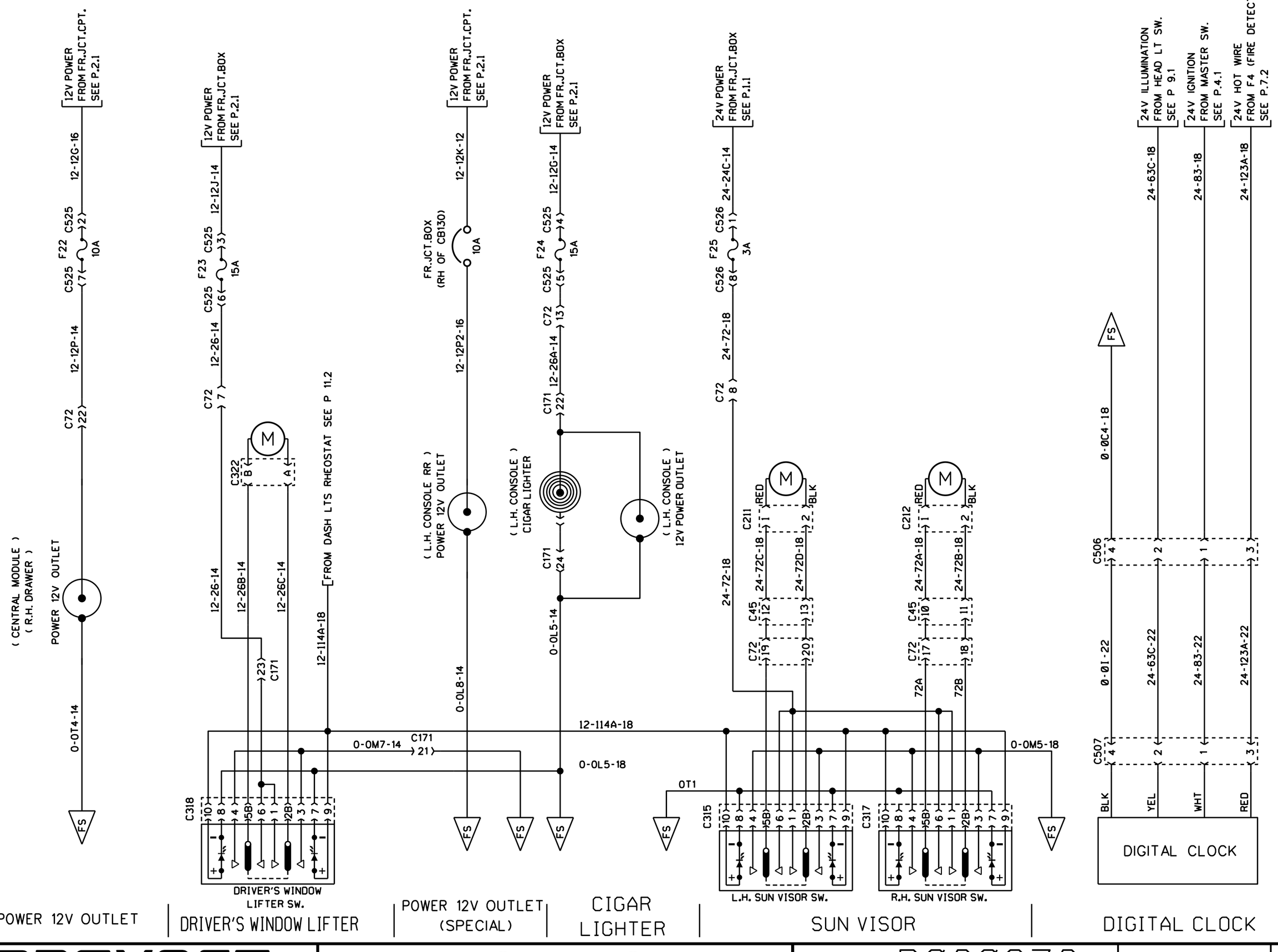

PREVOST | WIRING DIAGRAM | NO: D060976 | PAGE: 14.1sp1 | REVISION 14

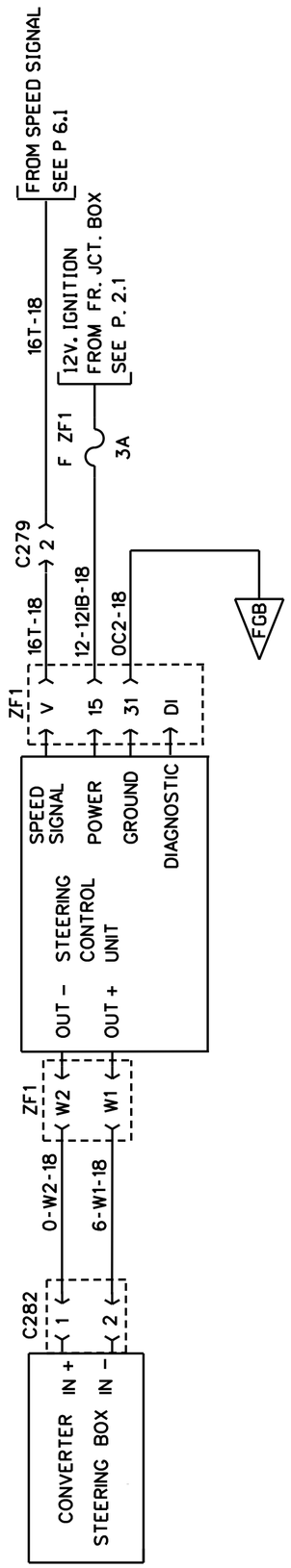

STEERING CONTOL ZF

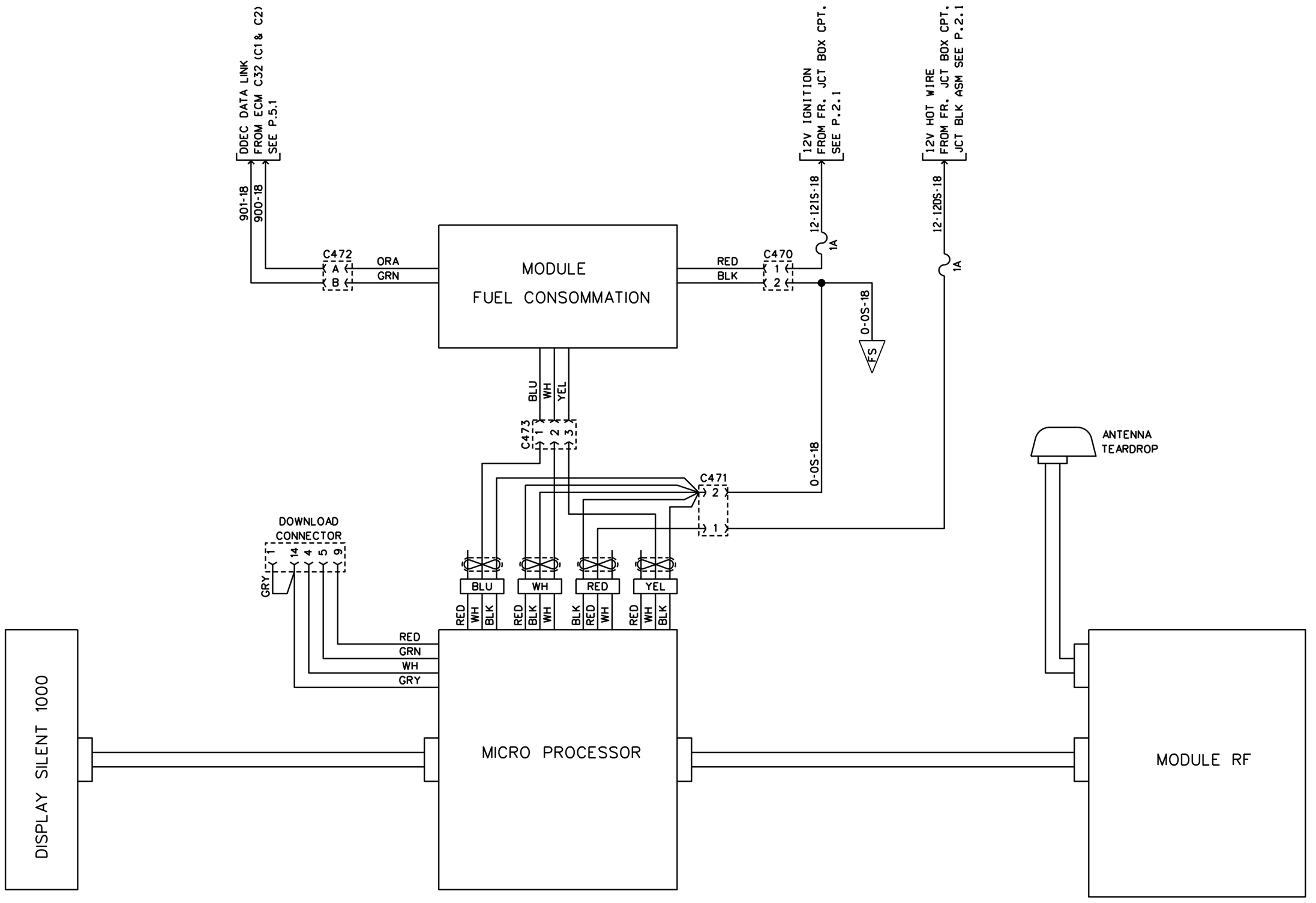

SILENT 1000

PREVOST	WIRING DIAGRAM	NO: D060976	PAGE: 15.1SP1	REVISION 00

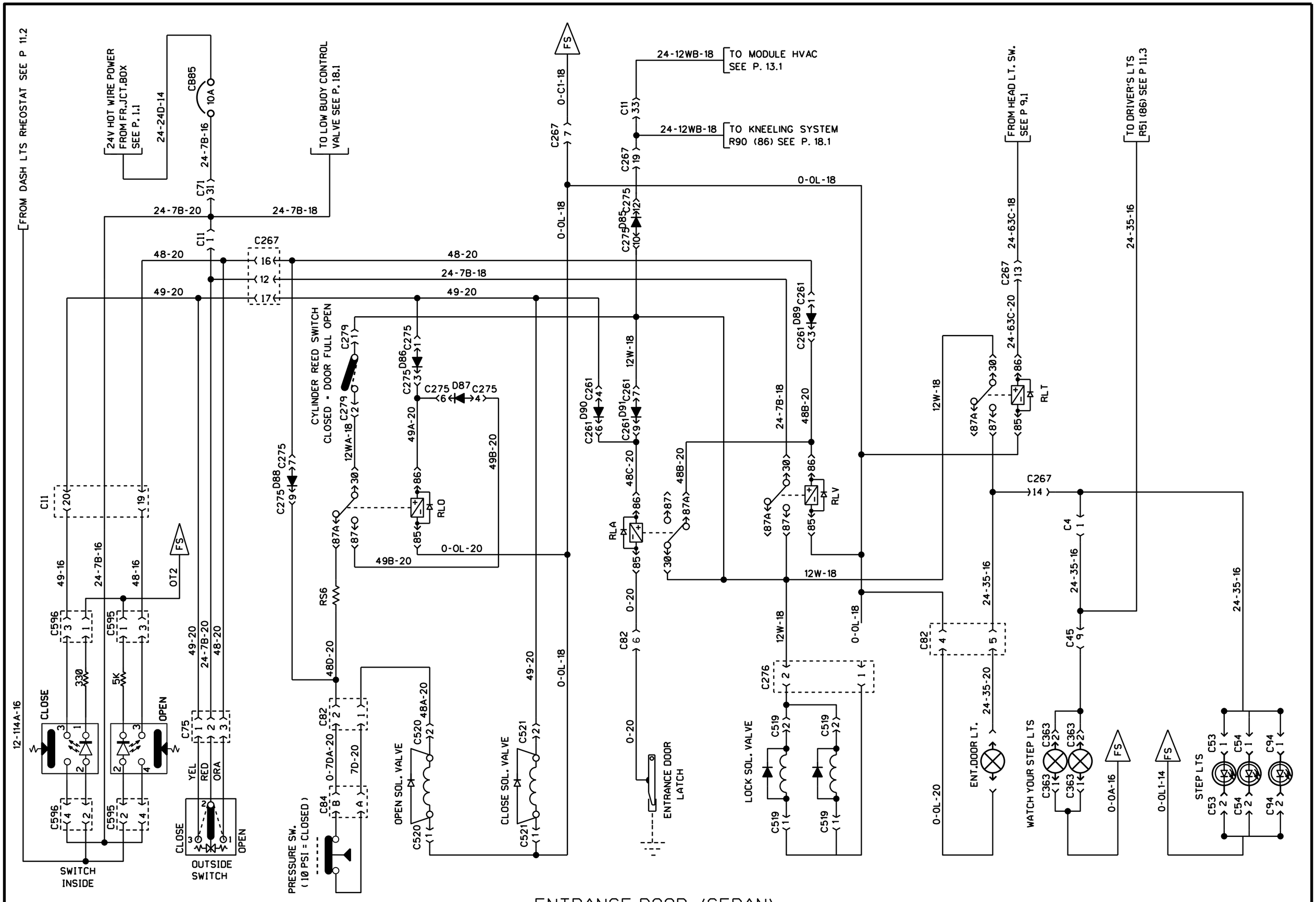

ENTRANCE DOOR (SEDAN)

PREVOST	WIRING DIAGRAM	NO: D060976	PAGE: 16.1	REVISION 00

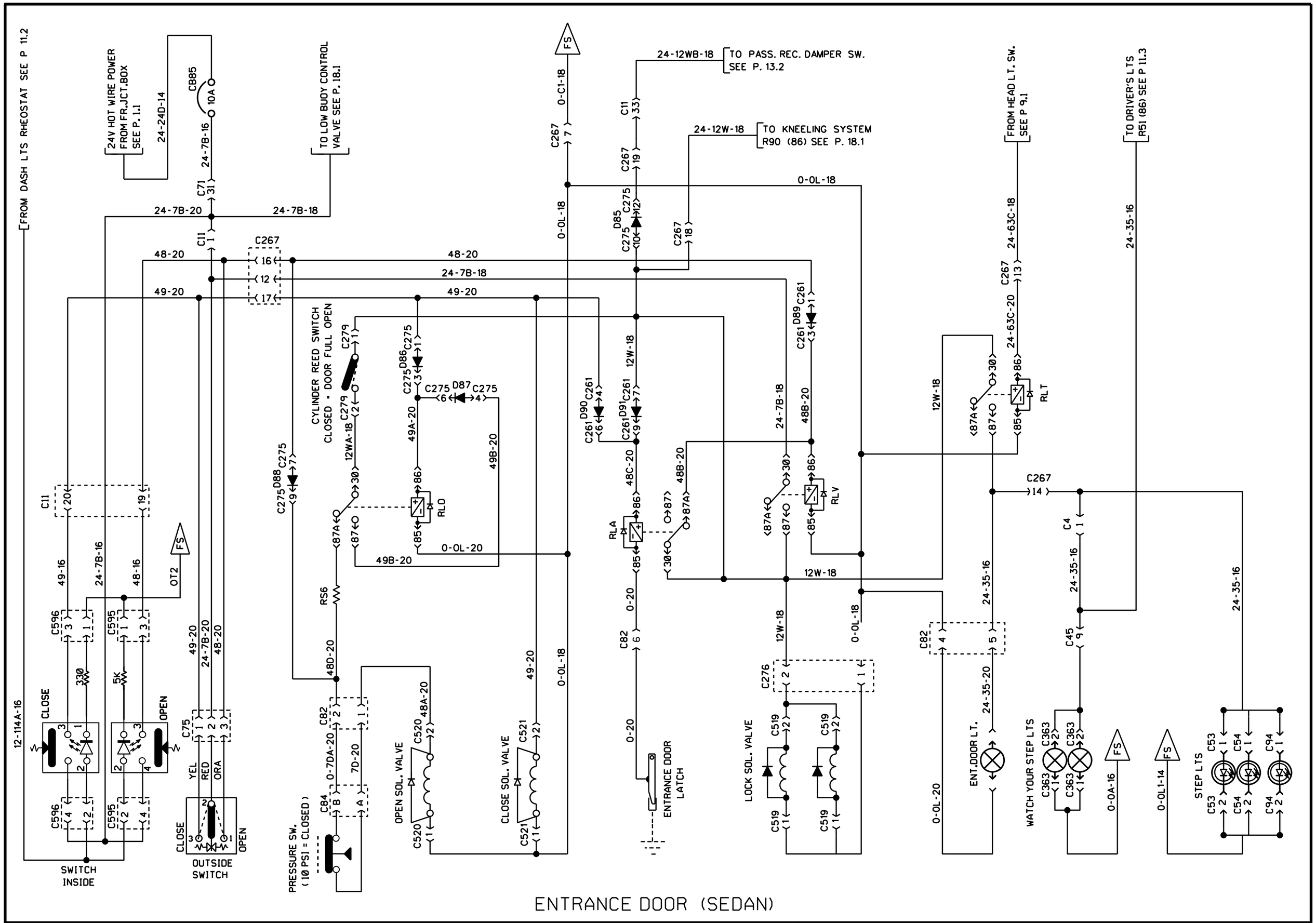

ENTRANCE DOOR (SEDAN)

PREVOST	WIRING DIAGRAM	NO: D060976	PAGE: 16.1	REVISION 02

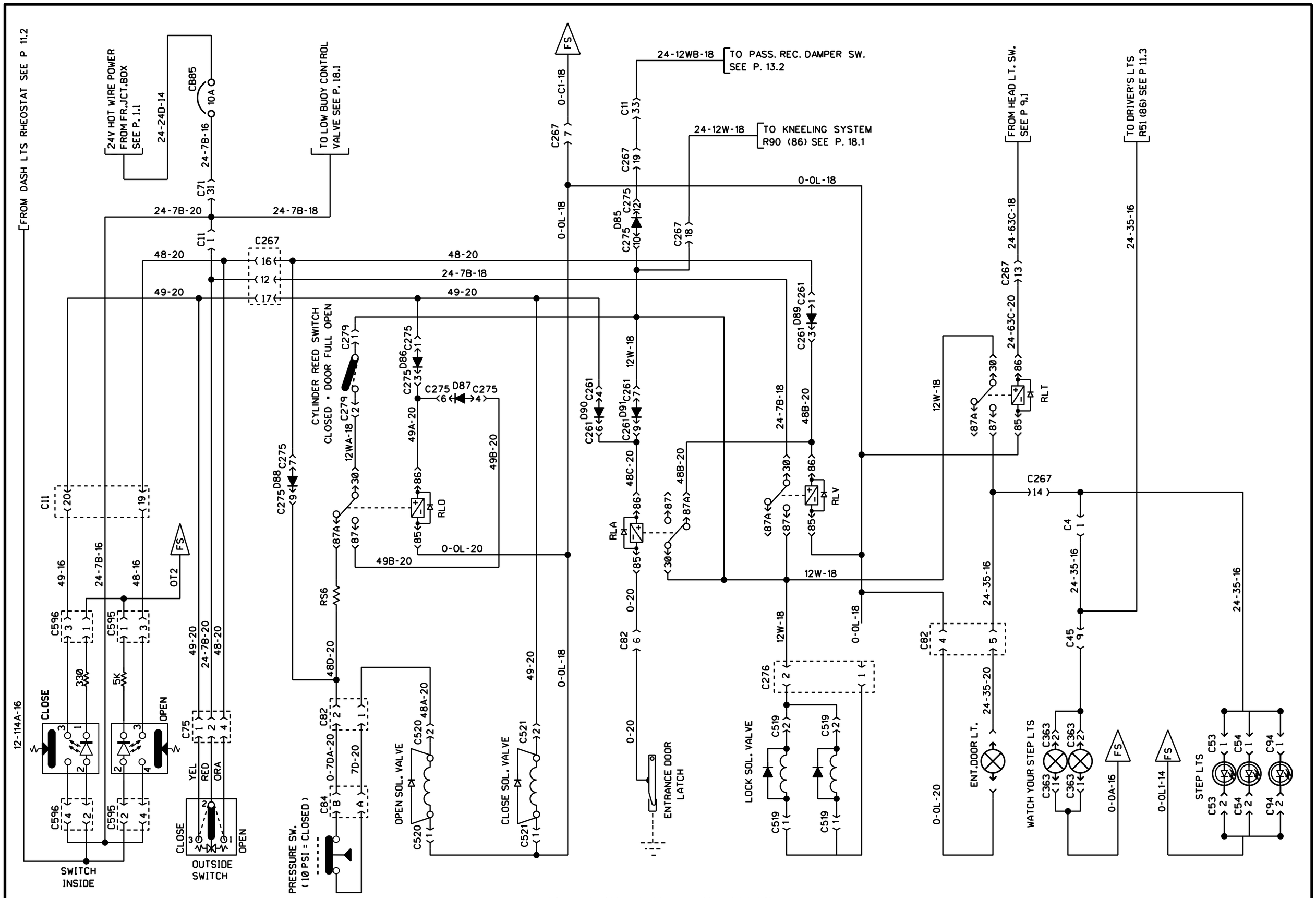

ENTRANCE DOOR (SEDAN)

PREVOST	WIRING DIAGRAM	NO: D060976	PAGE: 16.1	REVISION 11

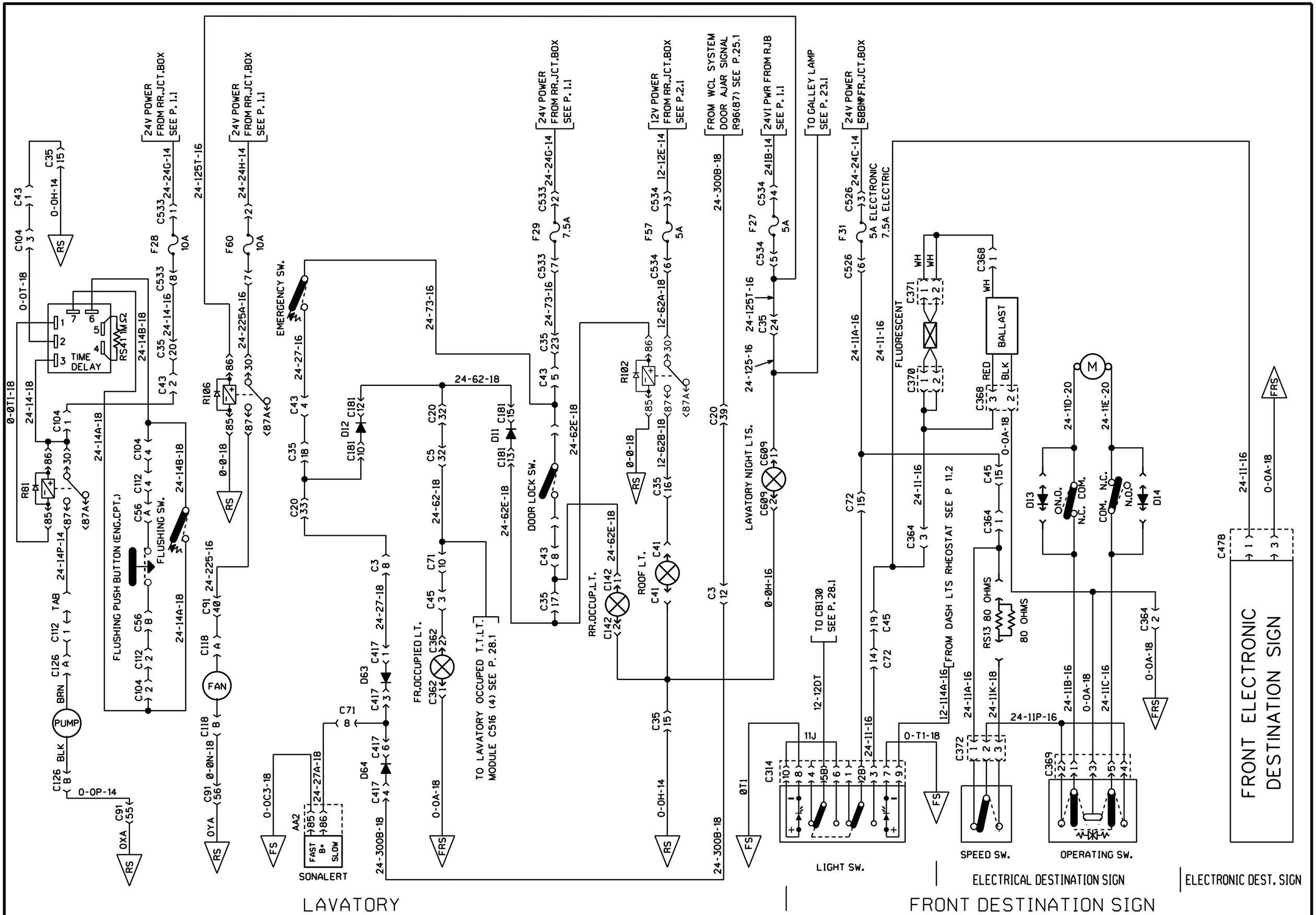

PREVOST	WIRING DIAGRAM	NO: D060976	PAGE: 17.1	REVISION 04

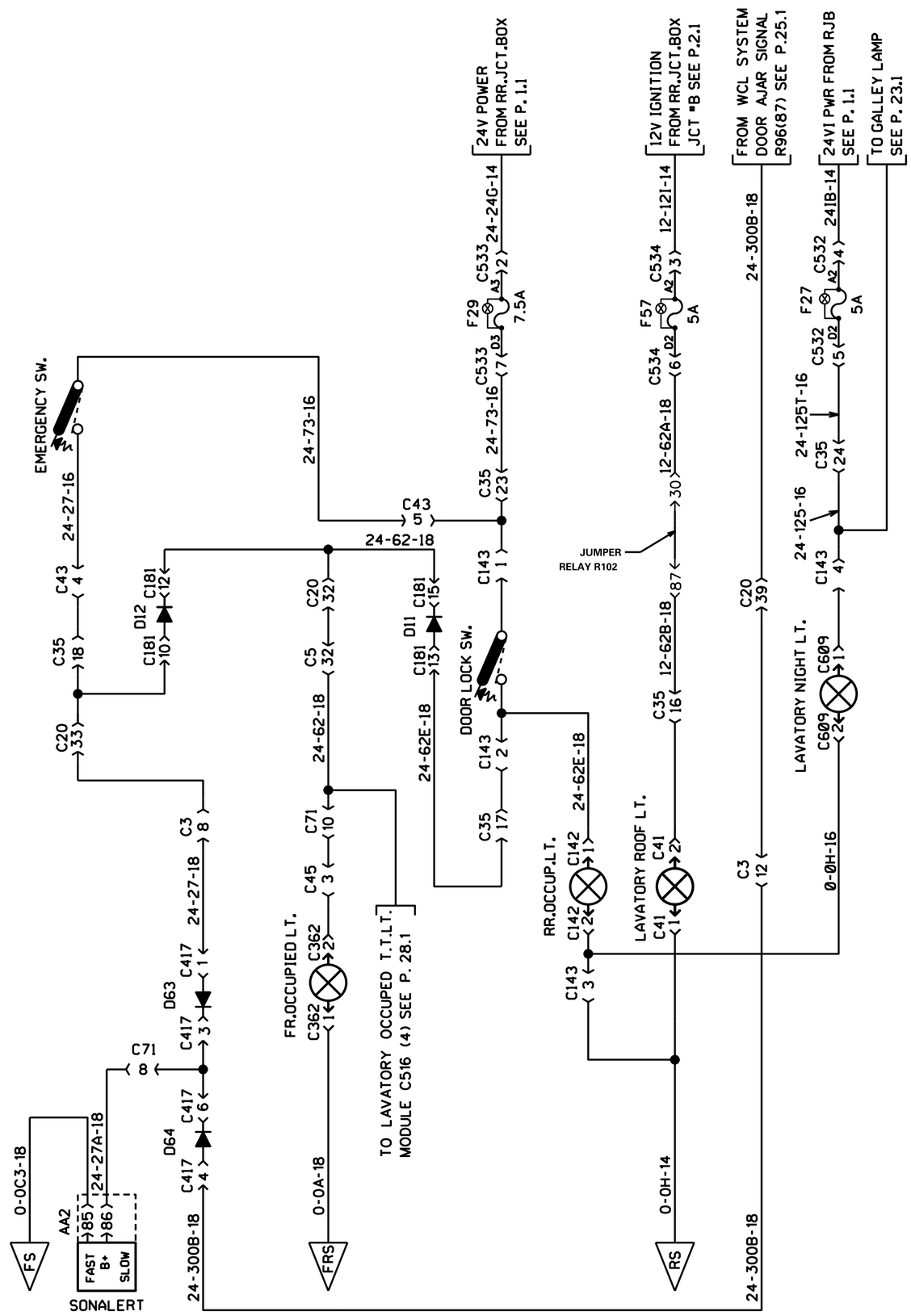

LAVATORY

PREVOST	WIRING DIAGRAM	NO: D060976	PAGE: 17.1 sp1	REVISION 00

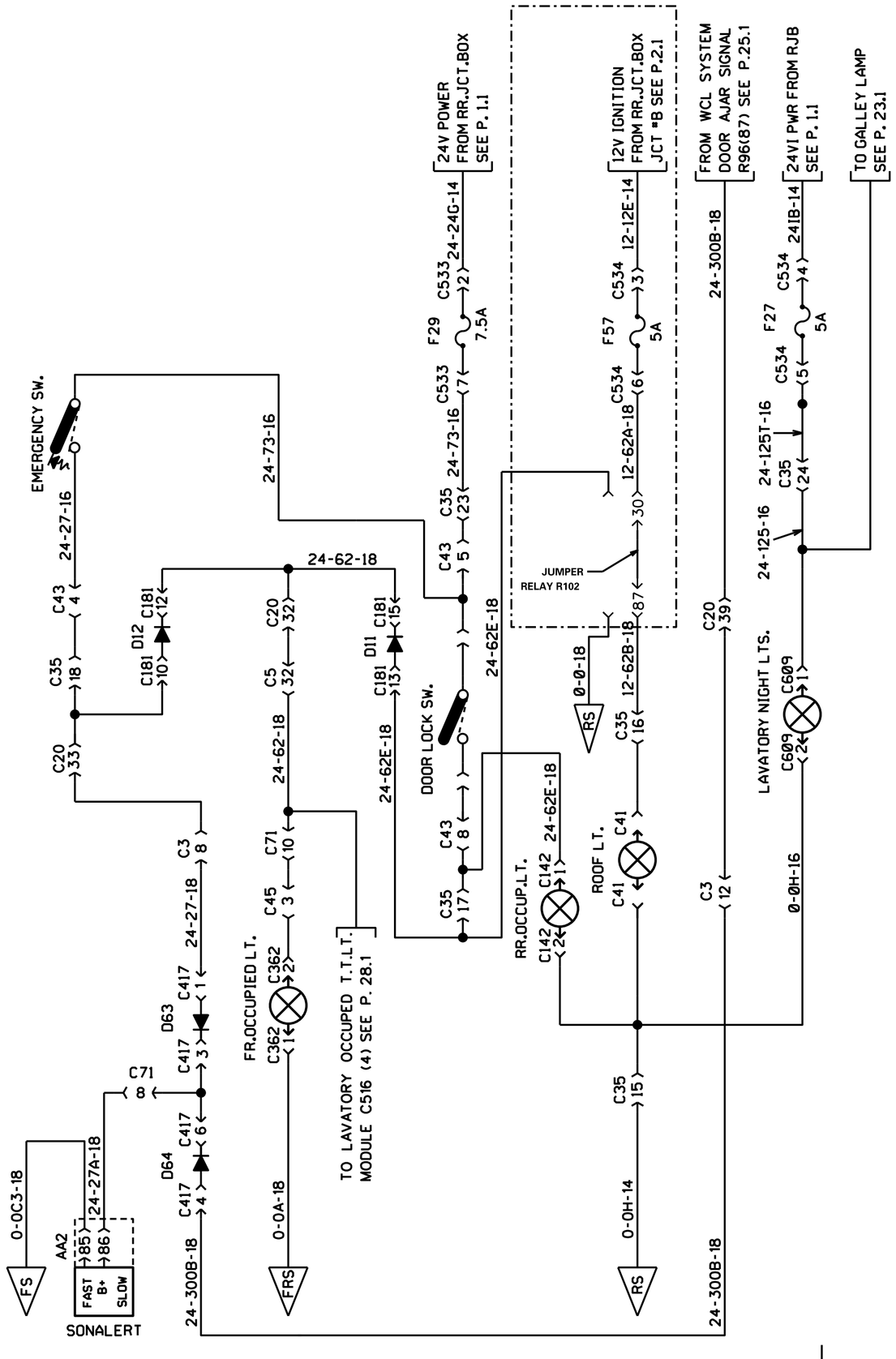

LAVATORY

ROOF LTS "ON" WITH IGN.

PREVOST	WIRING DIAGRAM	NO: D060976	PAGE: 17.1 sp1	REVISION 04

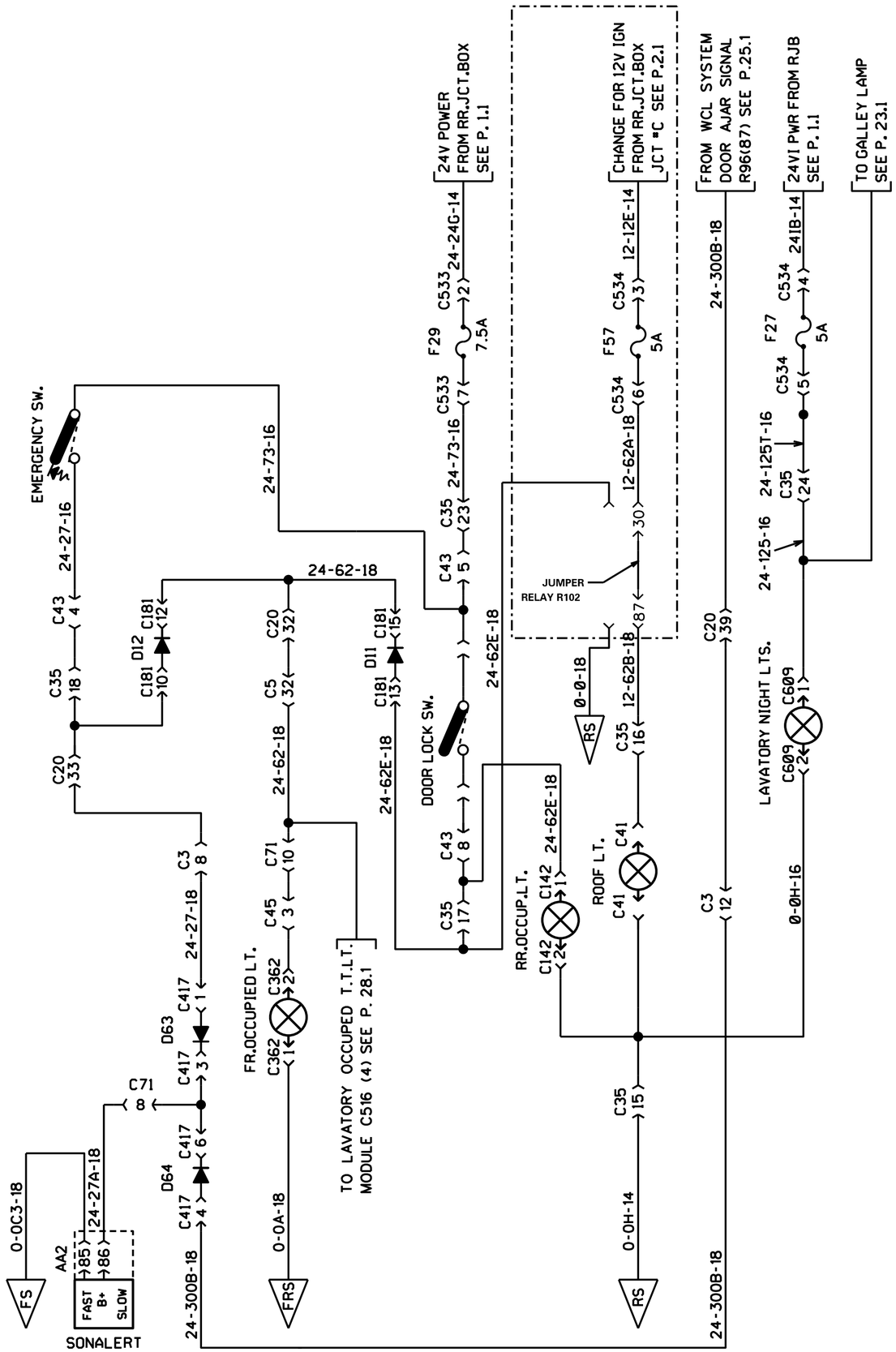

LAVATORY

ROOF LTS "ON" WITH IGN.

PREVOST	WIRING DIAGRAM	NO: D060976	PAGE: 17.1 sp1	REVISION 07

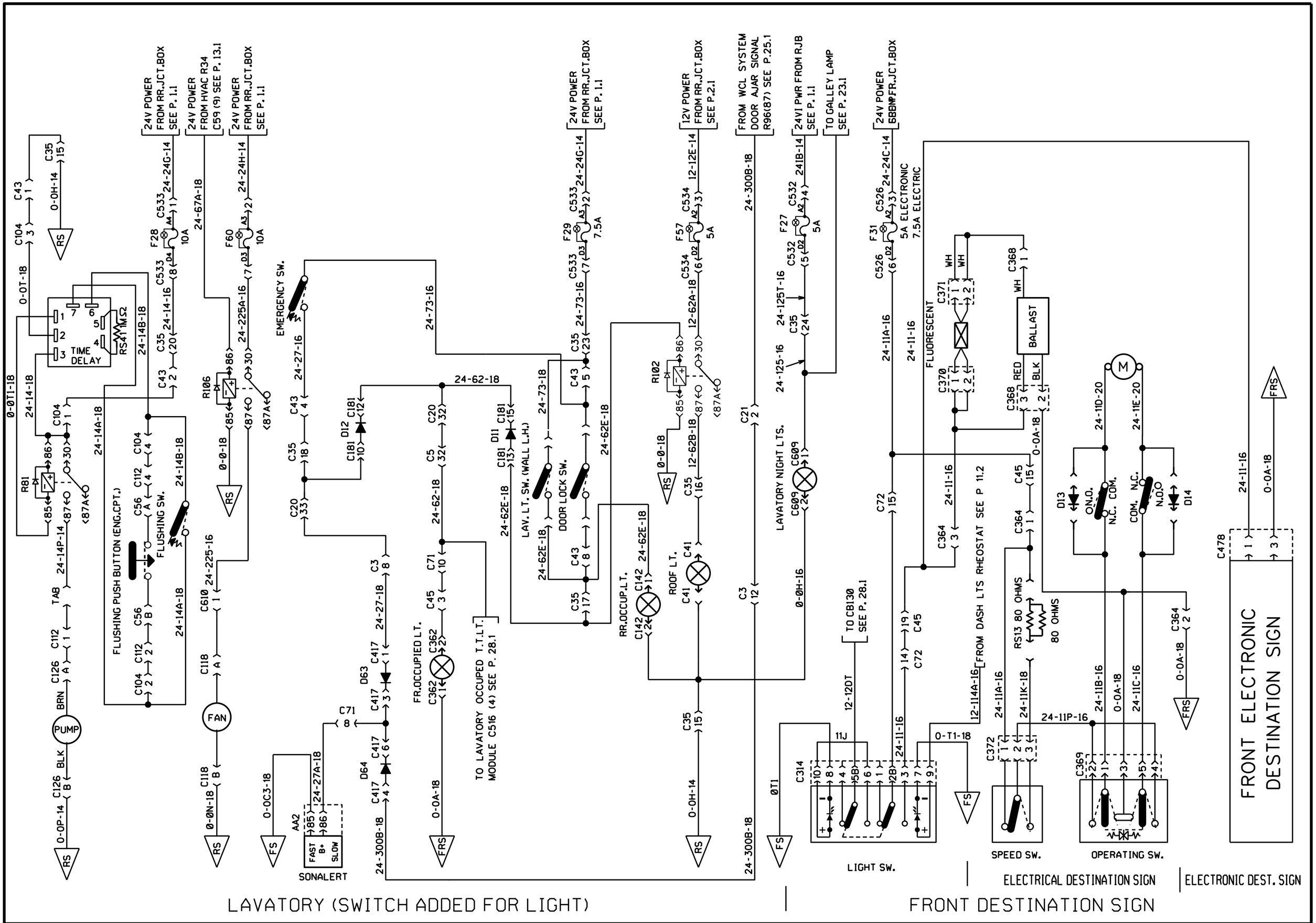

PREVOST	WIRING DIAGRAM	NO: D060976	PAGE: 17.1sp2	REVISION 00

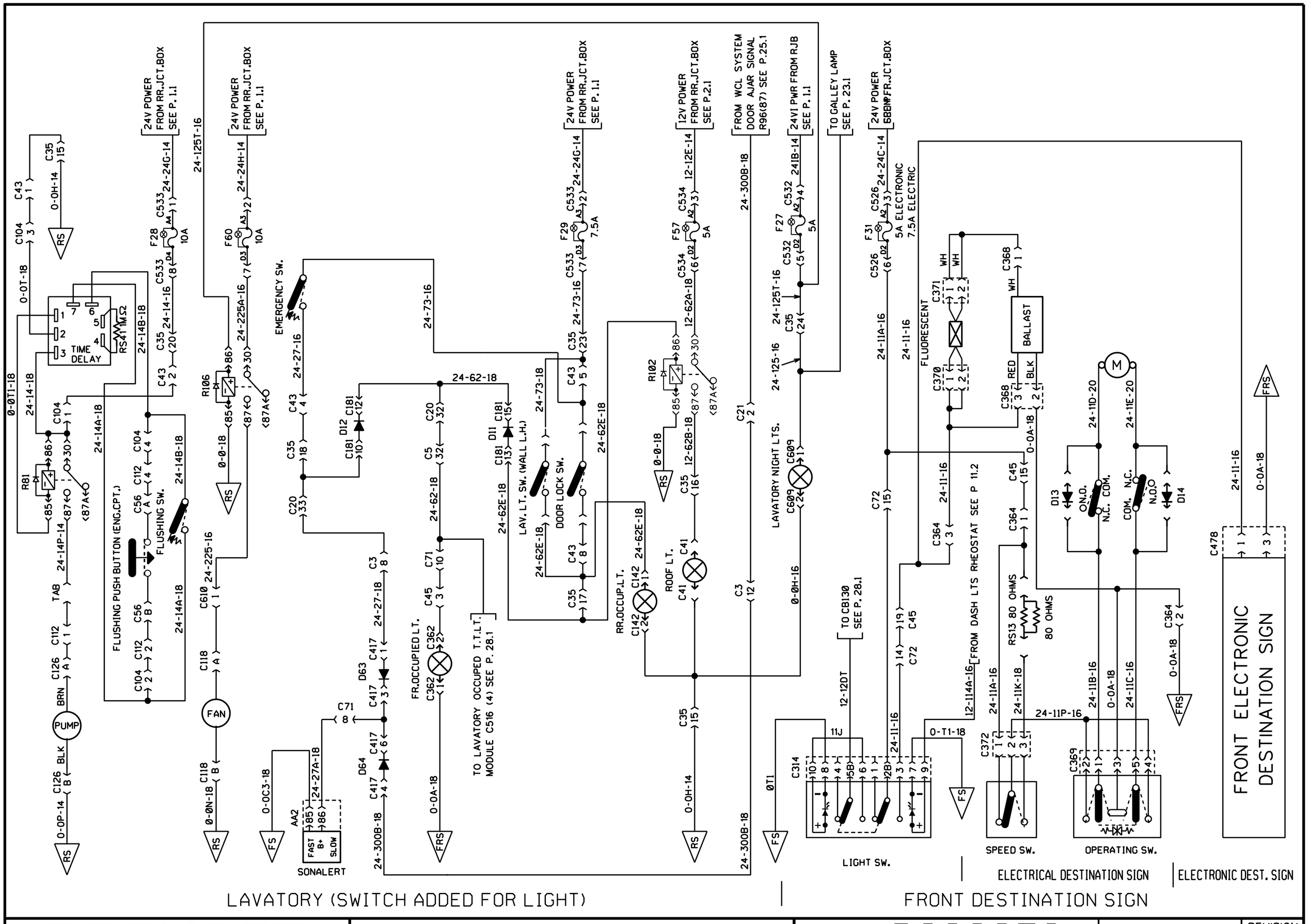

PREVOST	WIRING DIAGRAM	NO: D060976	PAGE: 17.1sp2	REVISION 02

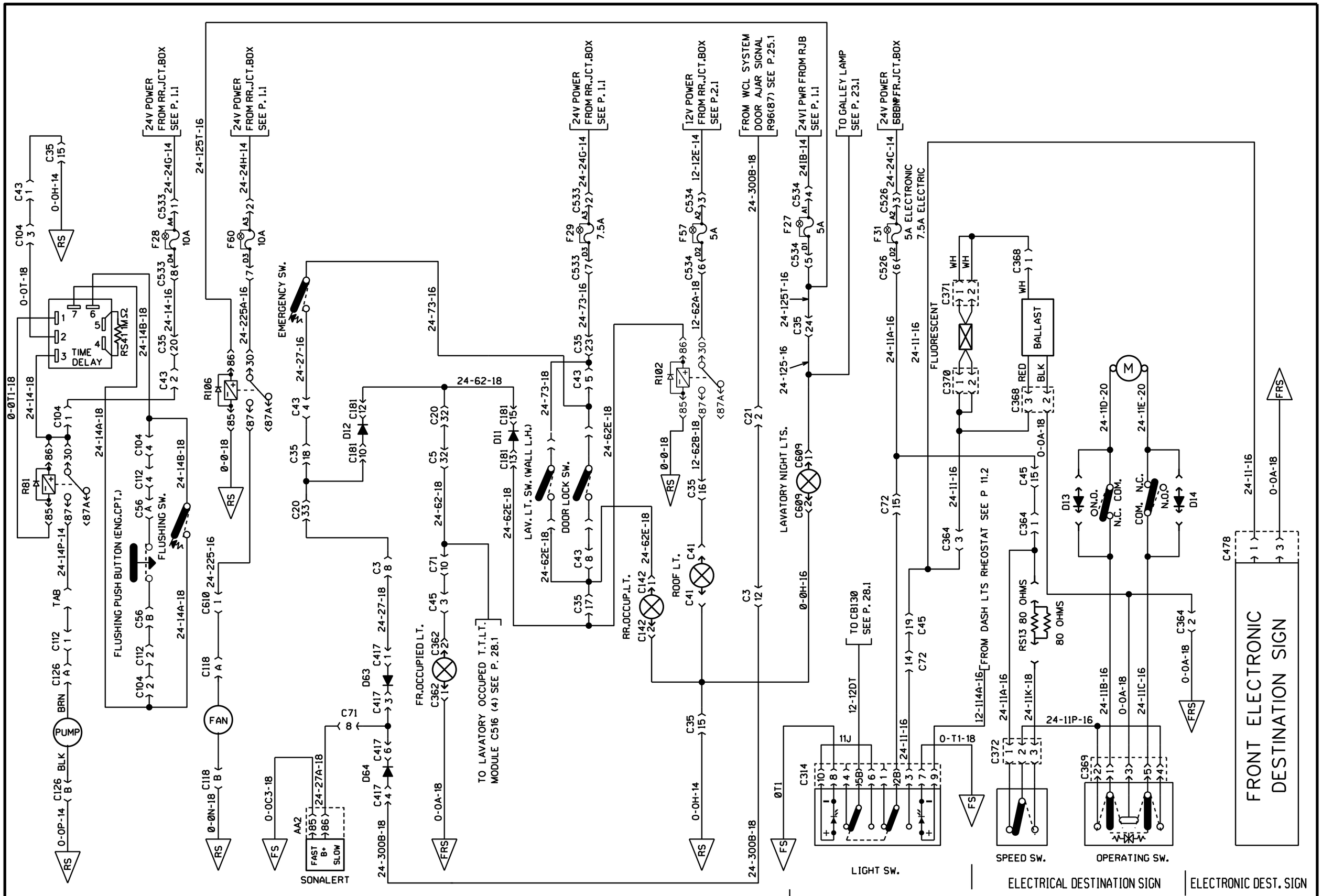

PREVOST	WIRING DIAGRAM	NO: D060976	PAGE: 17.1sp2	REVISION 03

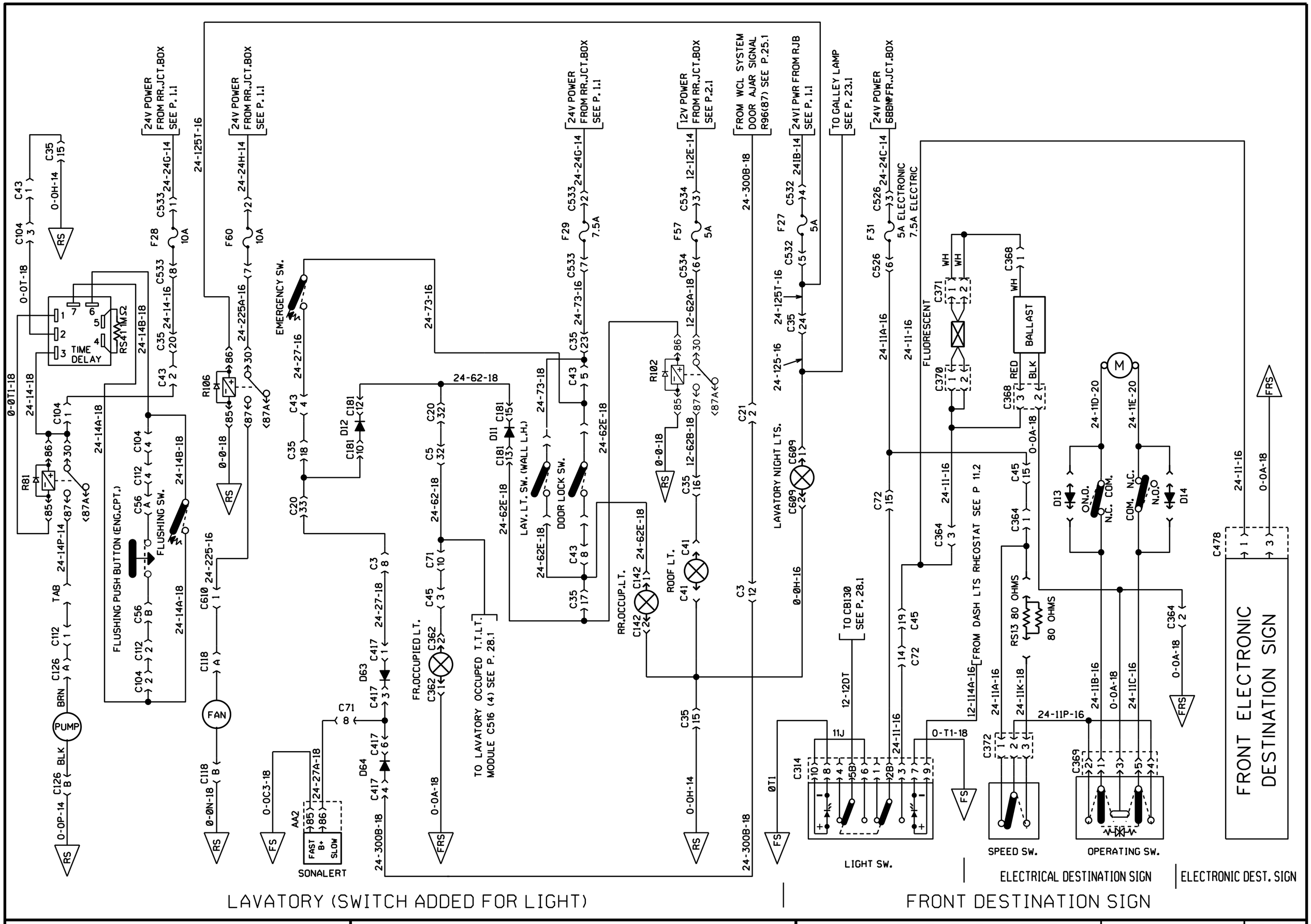

PREVOST	WIRING DIAGRAM	NO: D060976	PAGE: 17.1sp2	REVISION 04

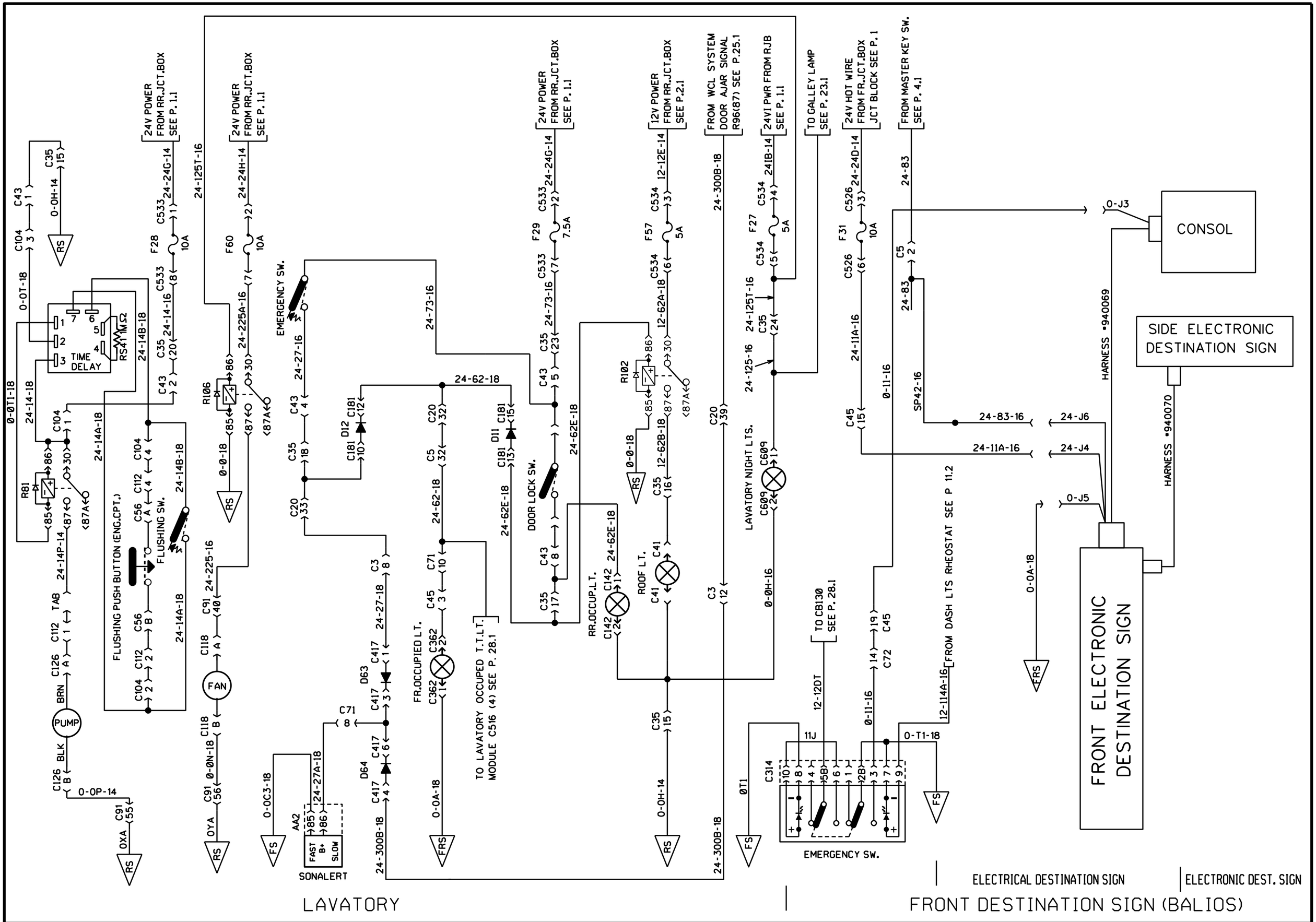

PREVOST	WIRING DIAGRAM	NO: D060976	PAGE: 17.1SP3	REVISION 00

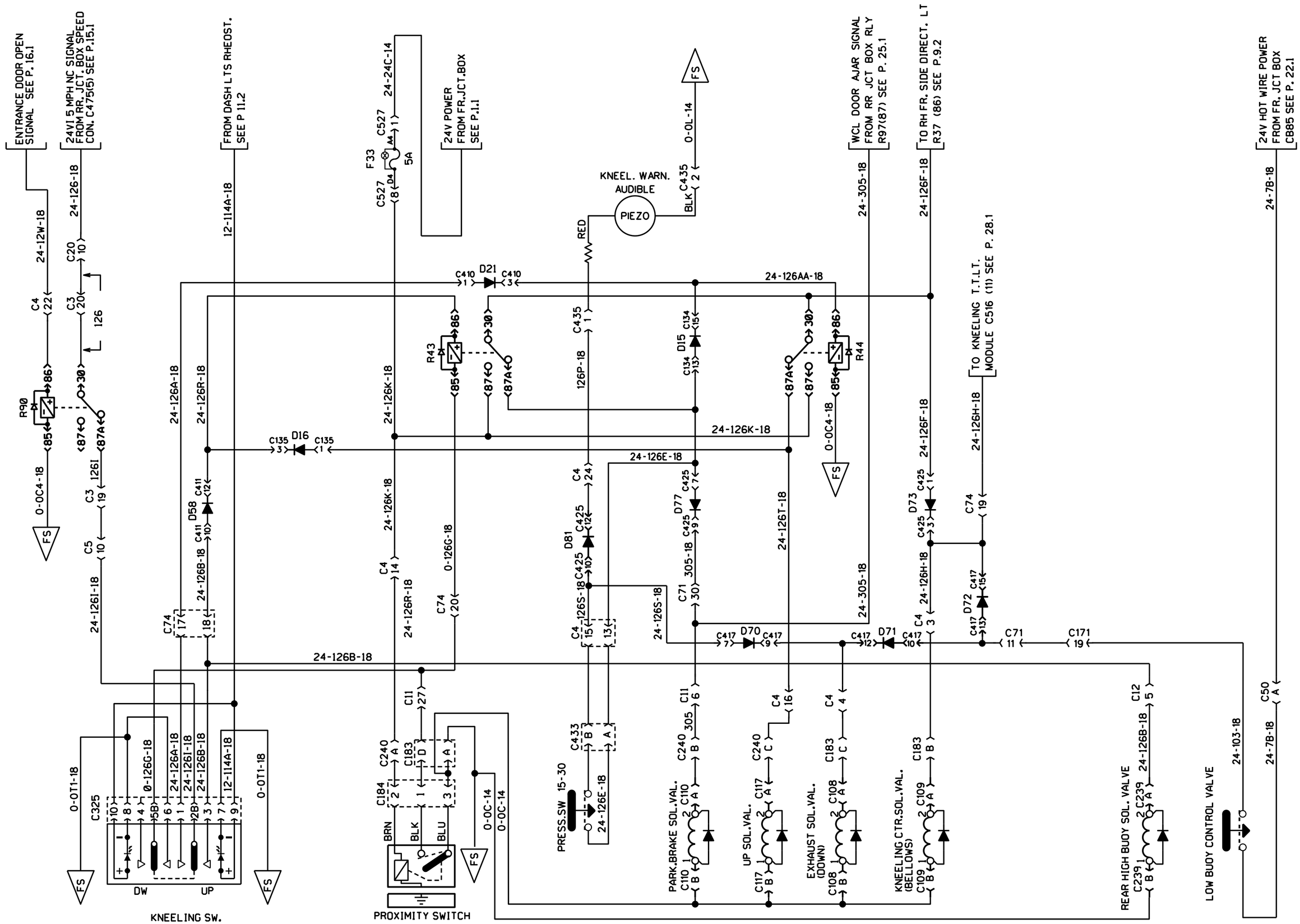

PREVOST | WIRING DIAGRAM | NO: D060976 | PAGE: 18.1 | REVISION 00

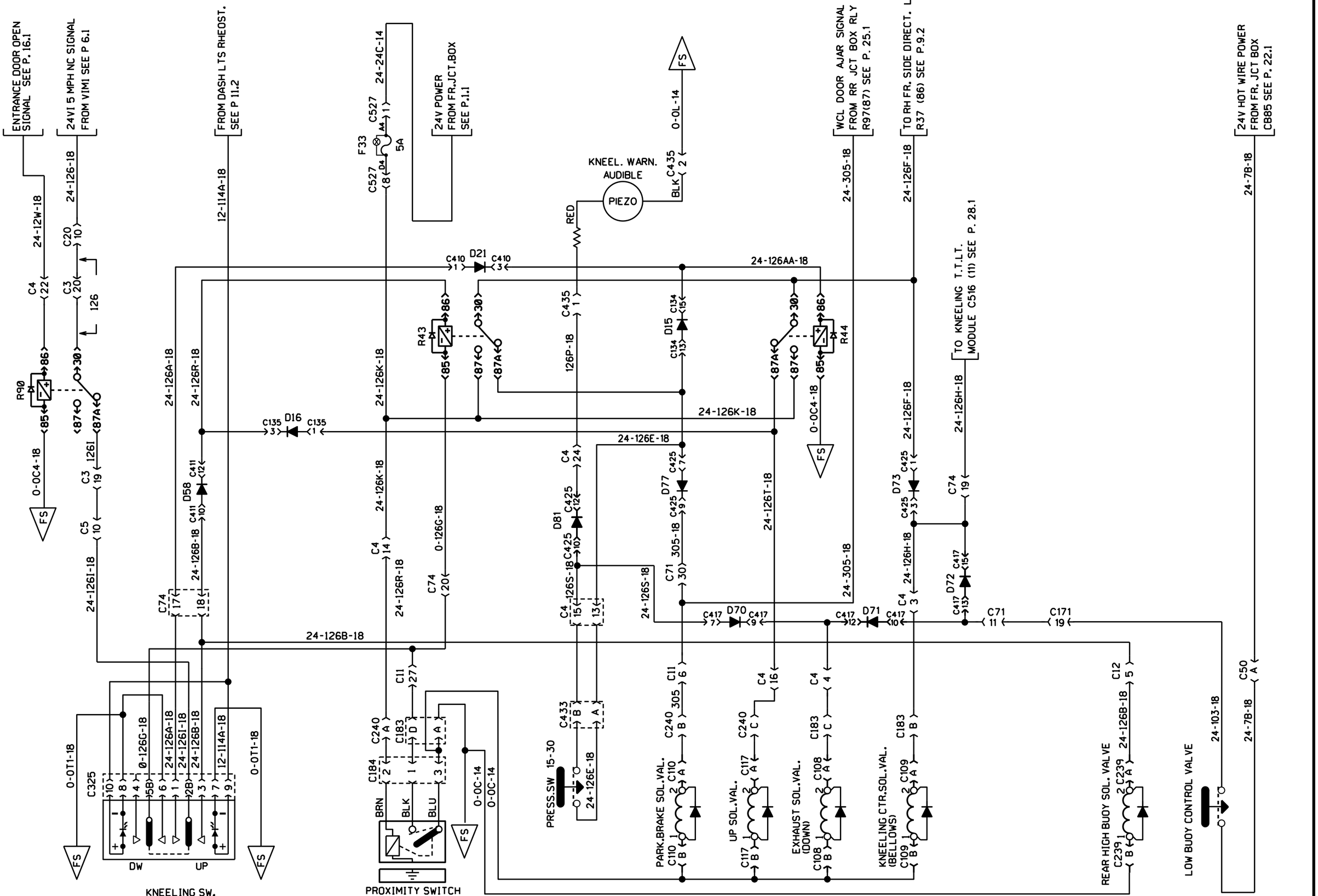

PREVOST	WIRING DIAGRAM	NO: D060976	PAGE: 18.1	REVISION 01

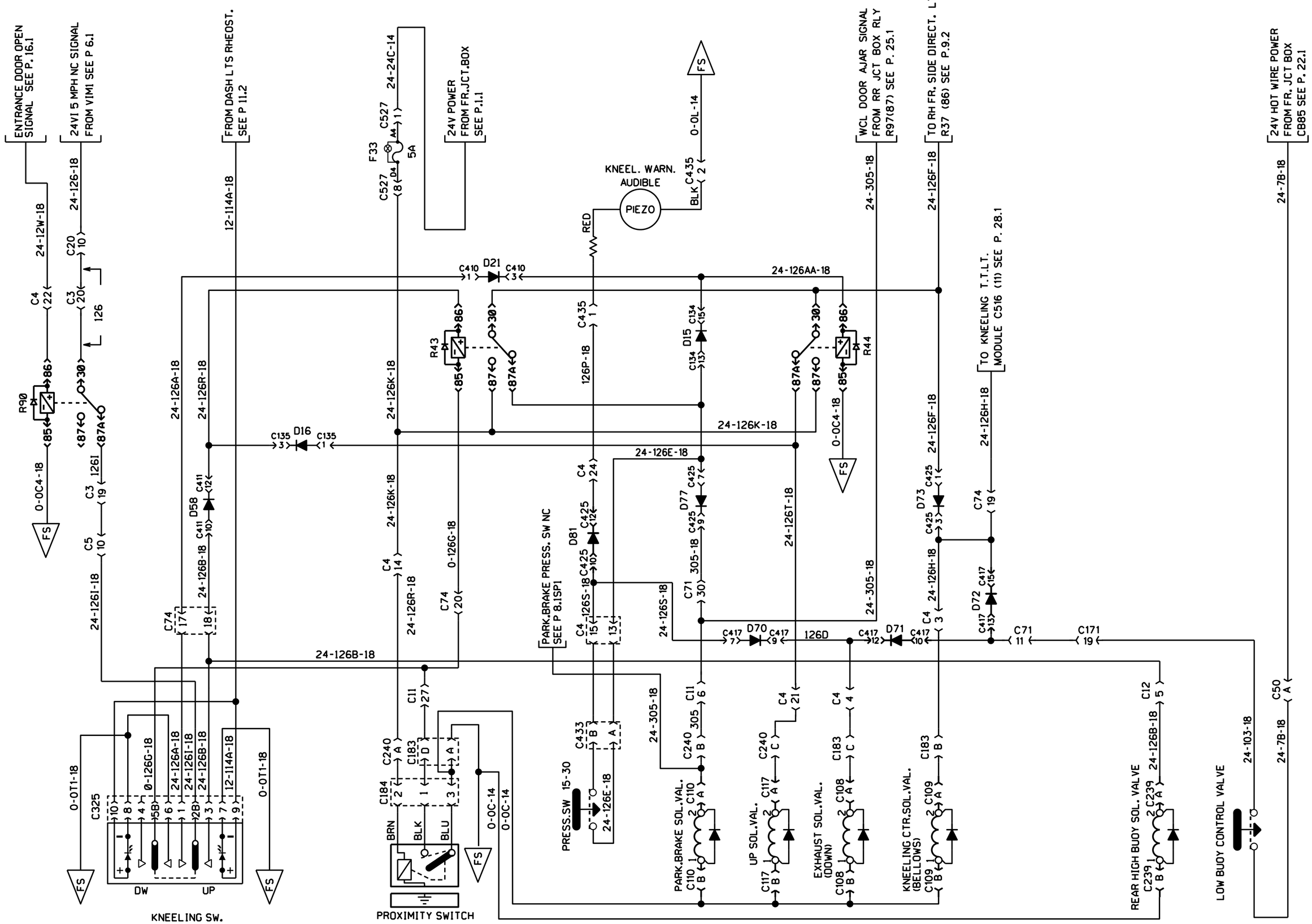

PREVOST	WIRING DIAGRAM	NO: D060976	PAGE: 18.1	REVISION 02

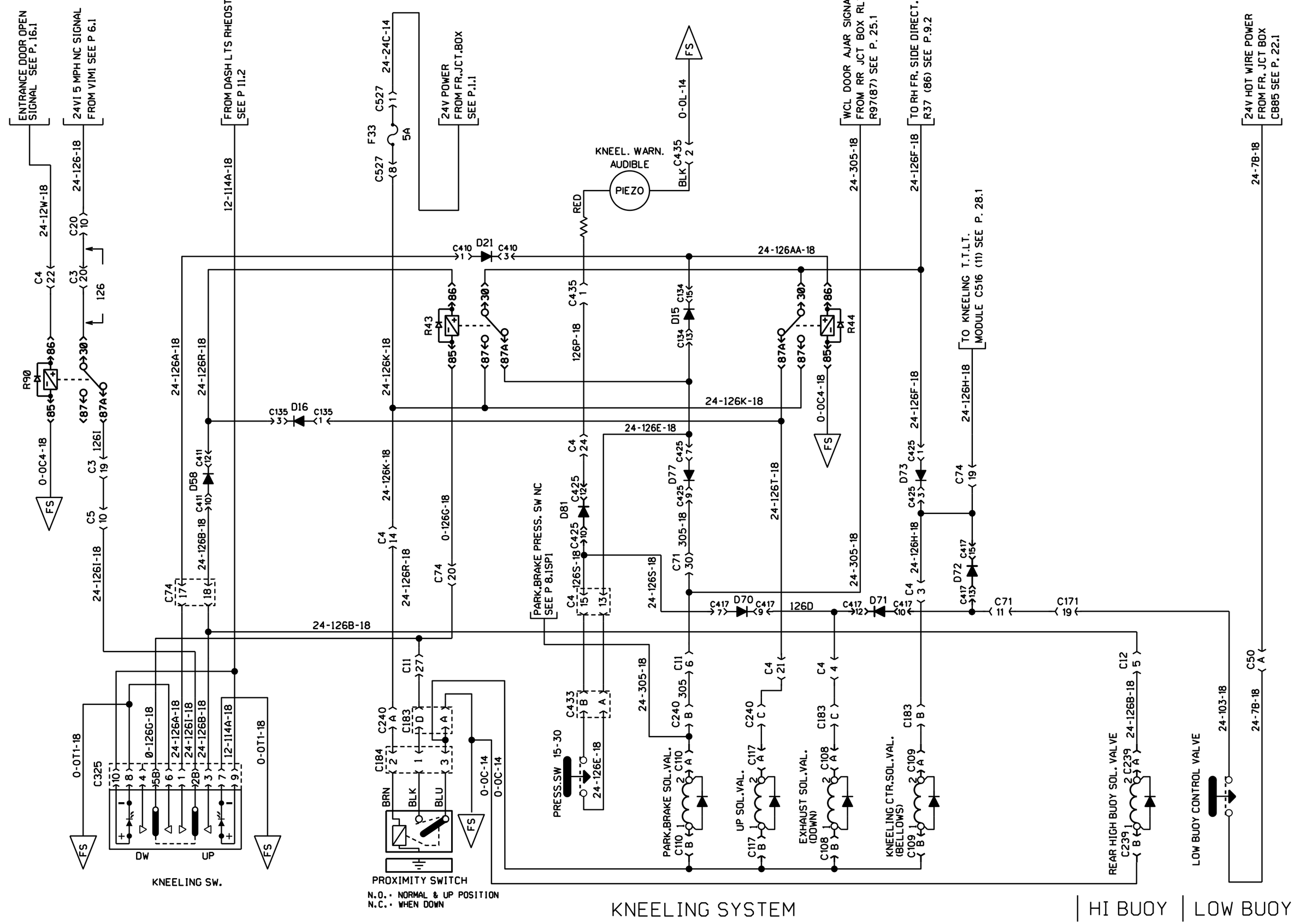

PREVOST	WIRING DIAGRAM	NO: D060976	PAGE: 18.1	REVISION 04

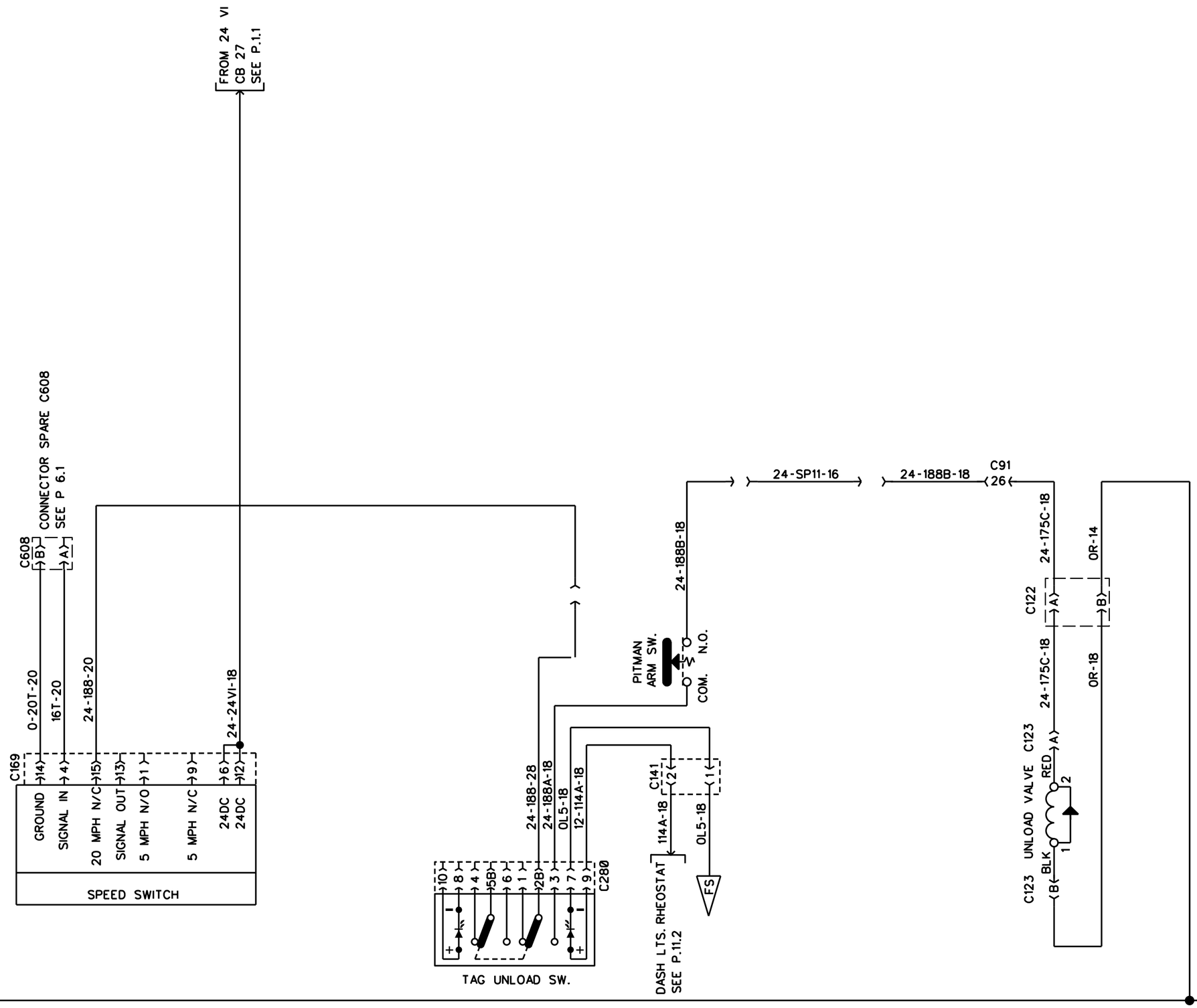

UNLOAD TAG SYSTEM

PREVOST	WIRING DIAGRAM	NO: D060976	PAGE: 18.1sp2	REVISION 01

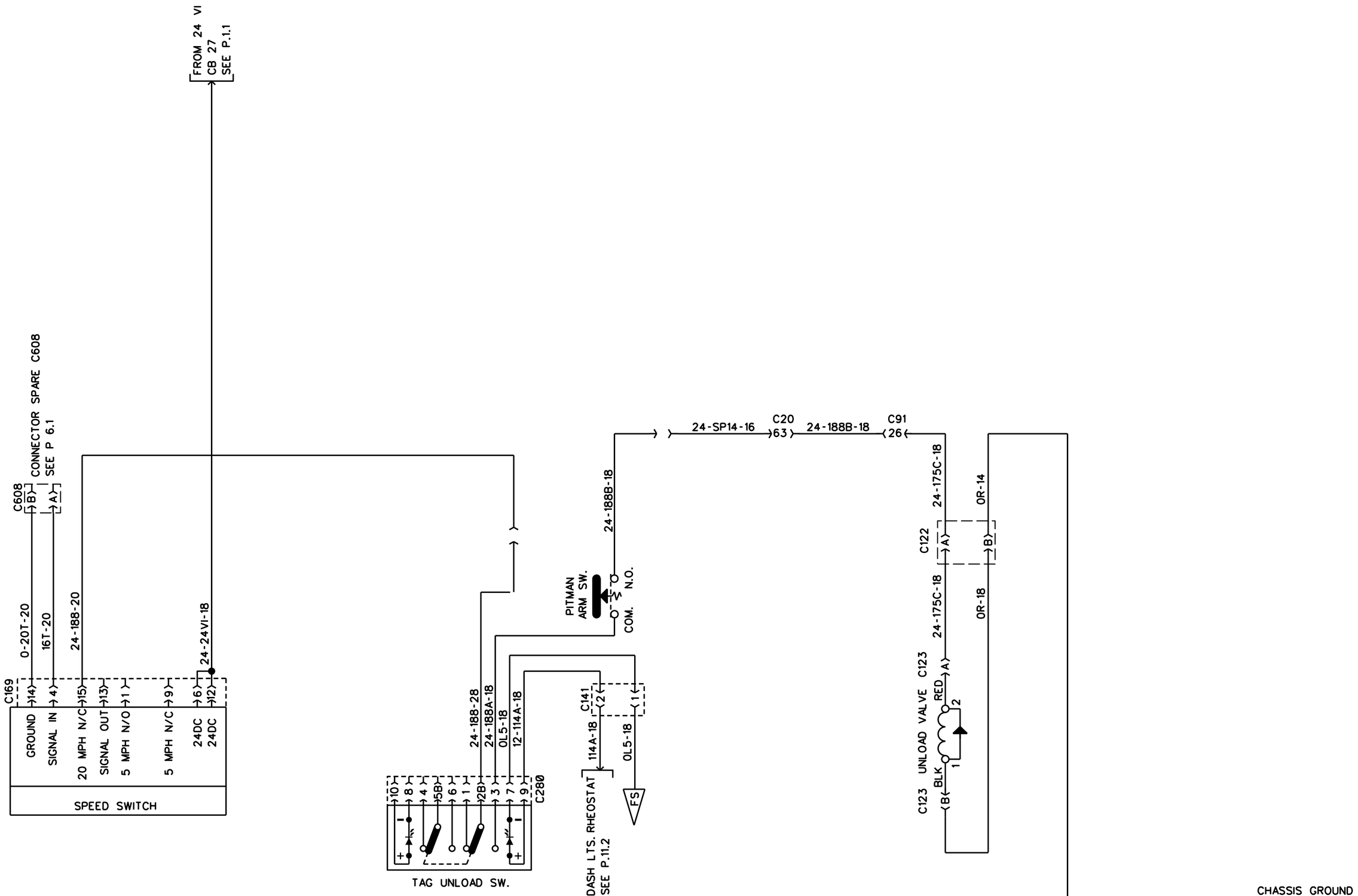

UNLOAD TAG SYSTEM

PREVOST	WIRING DIAGRAM	NO: D060976	PAGE: 18.1sp2	REVISION 02

LUGGAGE DOOR LOCK

LOCKED UNLOCKED

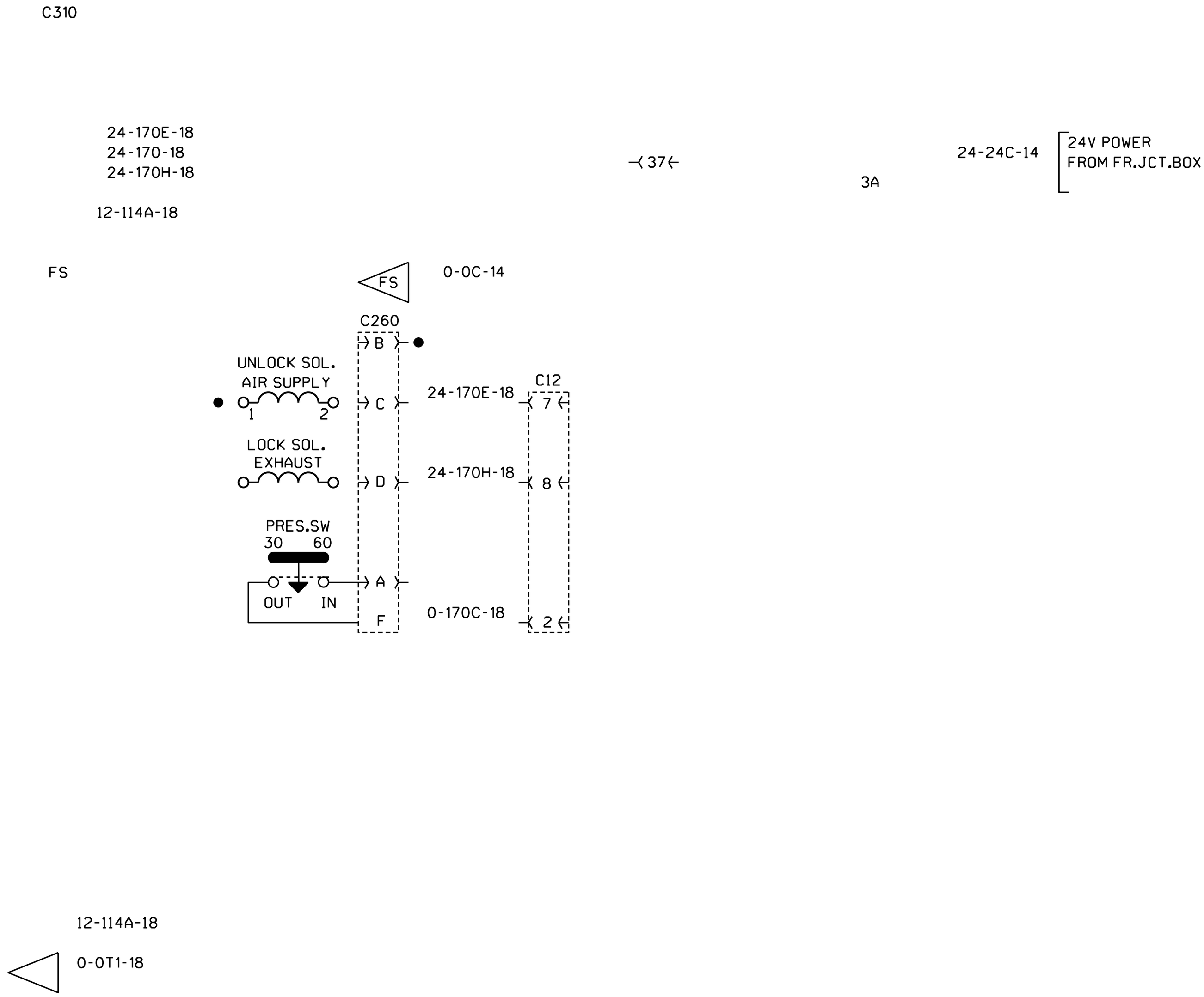

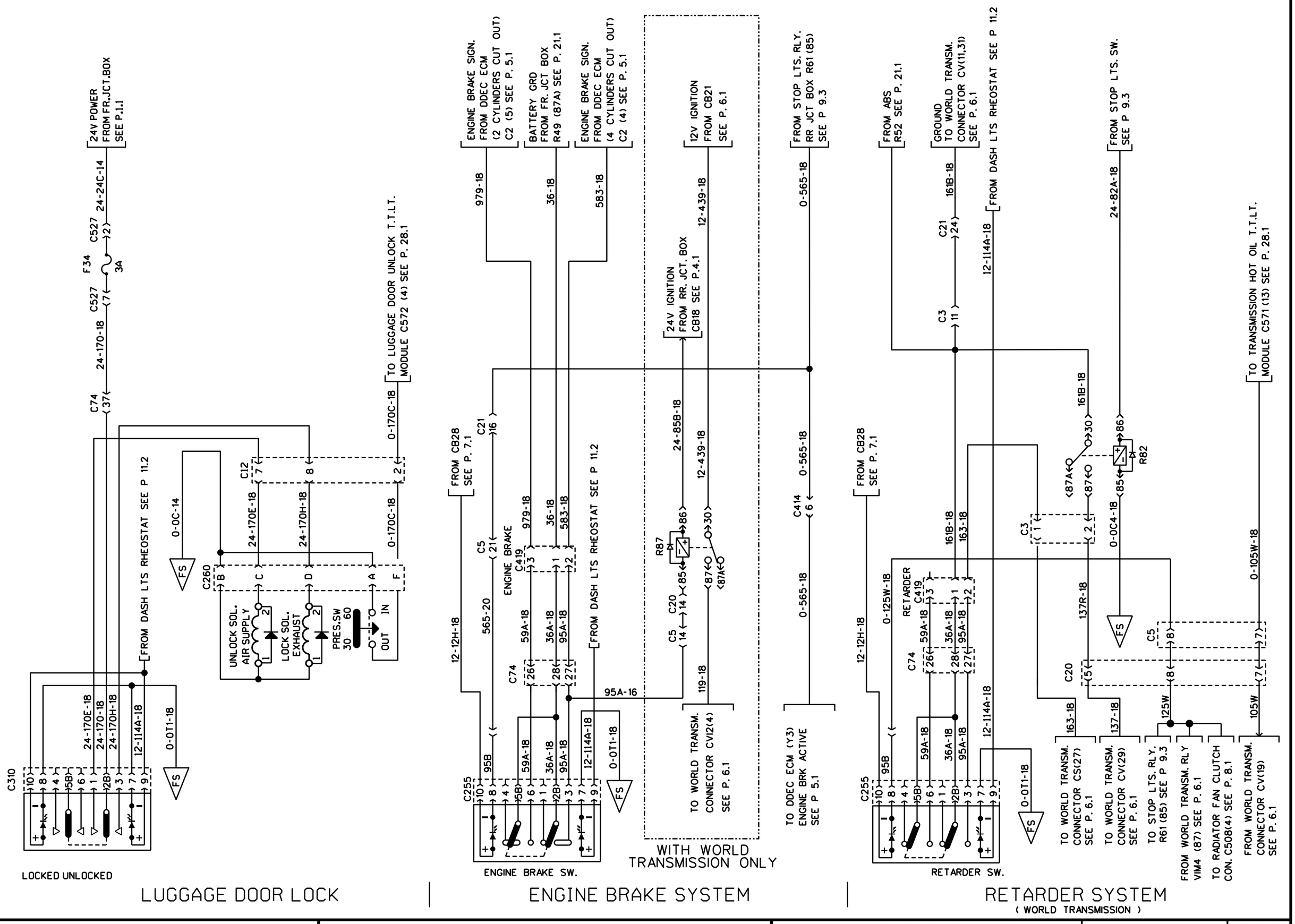
24V POWER FROM FR.JCT.BOX SEE P.1.1
24-24C-14
C527
F34
3A
24-170-18
C74
FROM DASH LTS RHEOSTAT SEE P 11.2
0-0C-14
FS
C12
24-170E-18
24-170H-18
0-170C-18
TO LUGGAGE DOOR UNLOCK T.T.L.T. MODULE C572 (4) SEE P. 28.1
C260
UNLOCK SOL. AIR SUPPLY
LOCK SOL. EXHAUST
PRES.SW 30 60
OUT IN
24-170E-18
24-170-18
24-170H-18
12-114A-18
0-0T1-18
C310
LOCKED UNLOCKED
LUGGAGE DOOR LOCK
ENGINE BRAKE SIGN. FROM DDEC ECM (2 CYLINDERS CUT OUT) C2 (5) SEE P. 5.1
979-18
BATTERY GRD FROM FR. JCT BOX R49 (87A) SEE P. 21.1
36-18
ENGINE BRAKE SIGN. FROM DDEC ECM (4 CYLINDERS CUT OUT) C2 (4) SEE P. 5.1
583-18
12V IGNITION FROM CB21 SEE P. 6.1
12-439-18
24V IGNITION FROM RR. JCT. BOX CB18 SEE P.4.1
24-85B-18
FROM STOP LTS. RLY. RR JCT BOX R61 (85) SEE P 9.3
0-565-18
FROM CB28 SEE P. 7.1
C21
C5
ENGINE BRAKE
C419
C74
565-20
12-12H-18
FROM DASH LTS RHEOSTAT SEE P 11.2
95A-16
95B
59A-18
36A-18
95A-18
12-114A-18
0-0T1-18
C255
ENGINE BRAKE SW.
R87
C20
119-18
TO WORLD TRANSM. CONNECTOR CV12(4) SEE P. 6.1
WITH WORLD TRANSMISSION ONLY
C414
TO DDEC ECM (Y3) ENGINE BRK ACTIVE SEE P 5.1
FROM ABS R52 SEE P. 21.1
GROUND TO WORLD TRANSM. CONNECTOR CV(11,31) SEE P. 6.1
161B-18
FROM DASH LTS RHEOSTAT SEE P 11.2
12-114A-18
C3
FROM STOP LTS. SW. SEE P 9.3
24-82A-18
R82
0-0C4-18
163-18
0-125W-18
RETARDER
137R-18
0-105W-18
TO TRANSMISSION HOT OIL T.T.L.T. MODULE C571 (13) SEE P. 28.1
125W
105W
TO WORLD TRANSM. CONNECTOR CS(27) SEE P. 6.1
137-18
TO WORLD TRANSM. CONNECTOR CV(29) SEE P. 6.1
TO STOP LTS. RLY. R61 (85) SEE P 9.3
FROM WORLD TRANSM. RLY VIM4 (87) SEE P. 6.1
TO RADIATOR FAN CLUTCH CON. C508(4) SEE P. 8.1
FROM WORLD TRANSM. CONNECTOR CV(19) SEE P. 6.1
RETARDER SW.
ENGINE BRAKE SYSTEM
RETARDER SYSTEM
(WORLD TRANSMISSION)

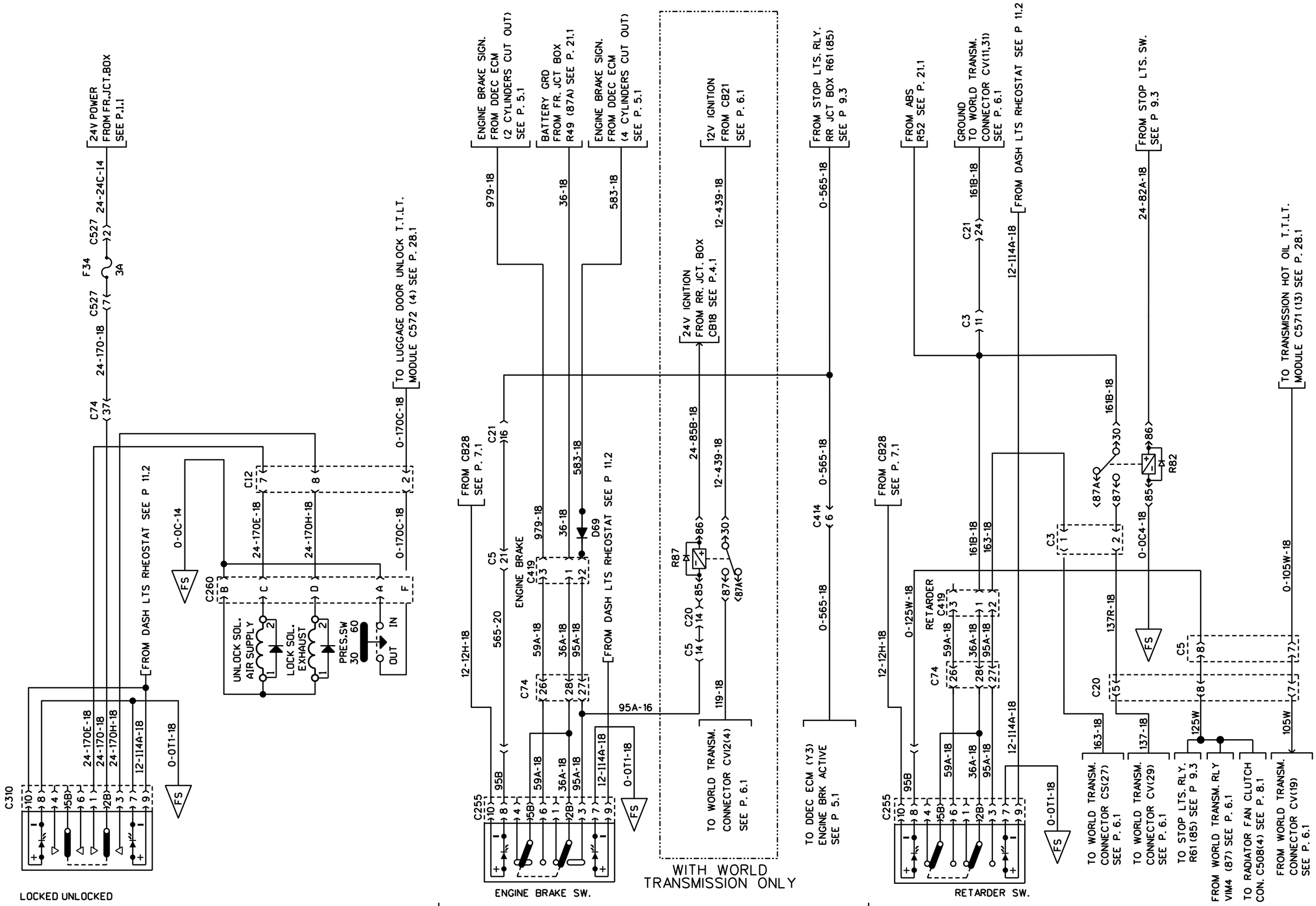

PREVOST	WIRING DIAGRAM	NO: D060976	PAGE: 19.1	REVISION 08

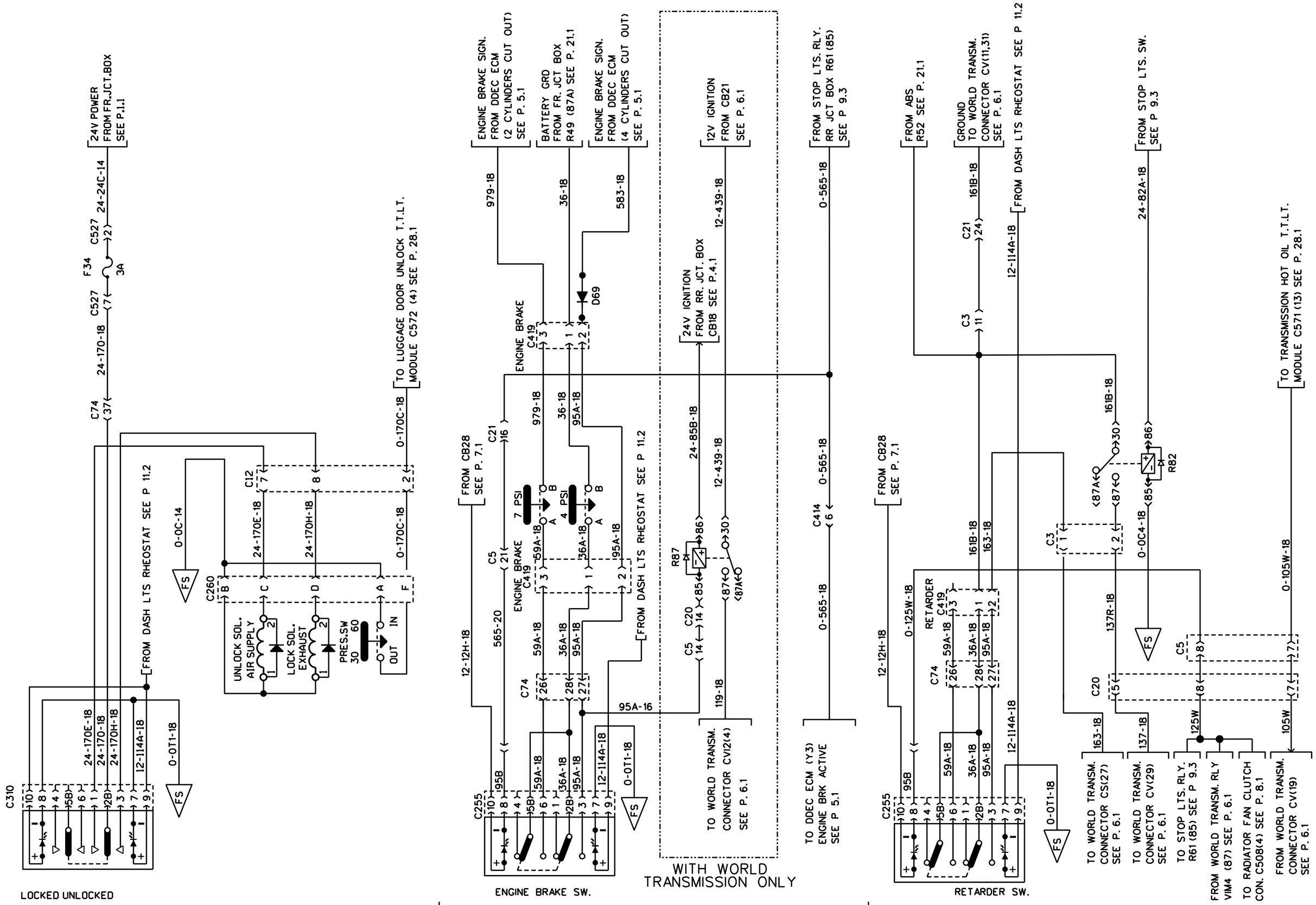

PREVOST	WIRING DIAGRAM	NO: D060976	PAGE: 19.1sp1	REVISION 00

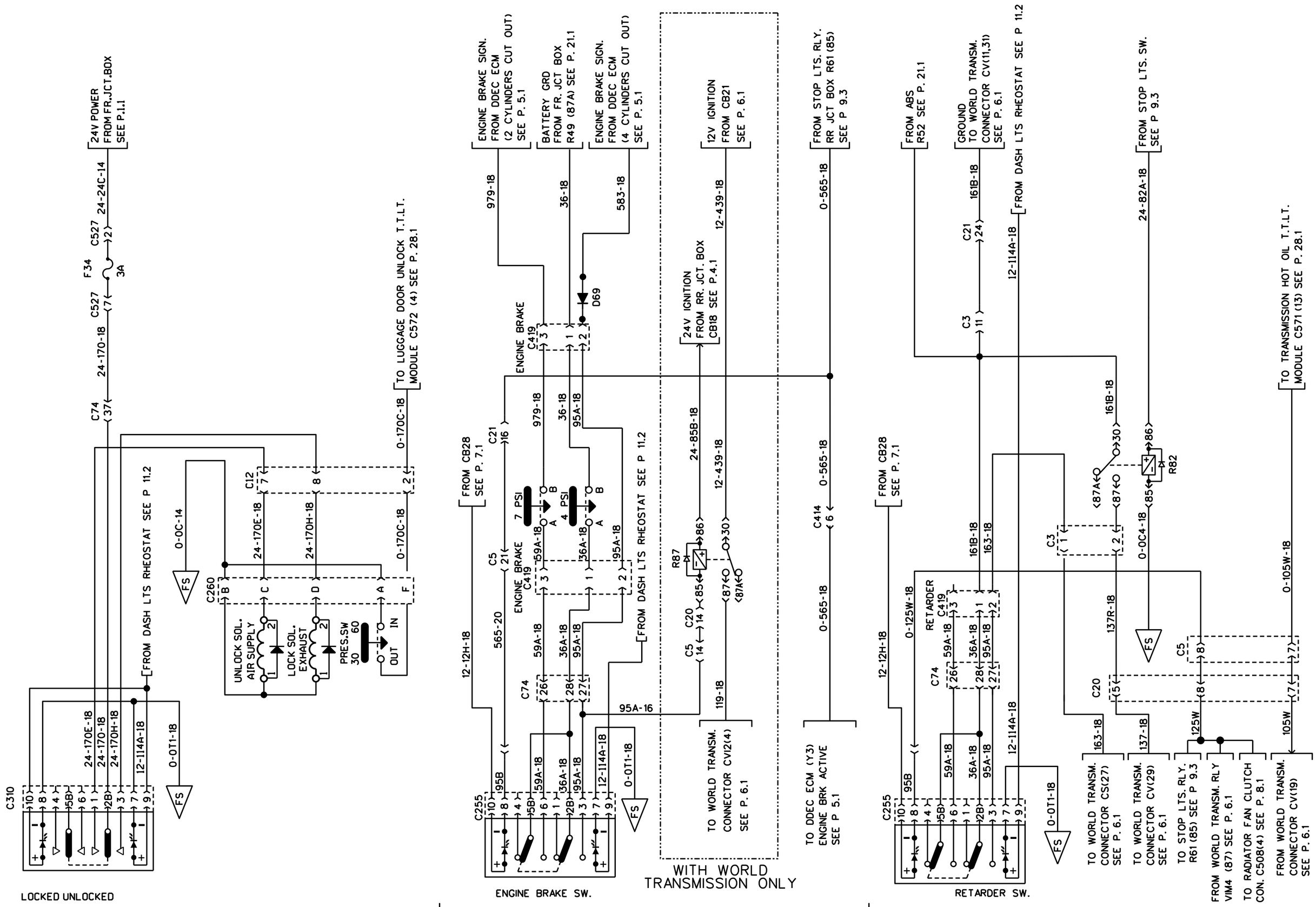

PREVOST	WIRING DIAGRAM	NO: D060976	PAGE: 19.1sp1	REVISION 00

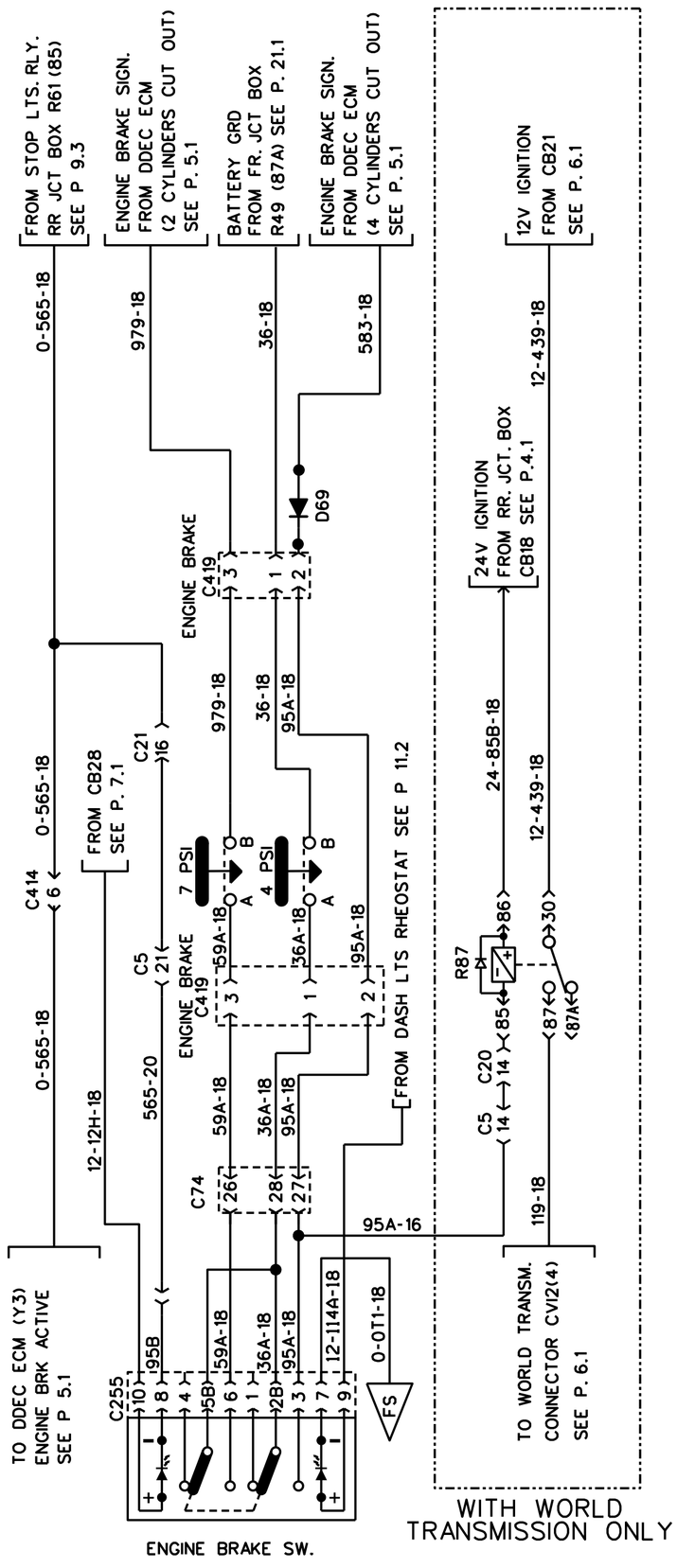

ENGINE BRAKE SYSTEM
(WITH 2 PRESSURE SWITCHS)

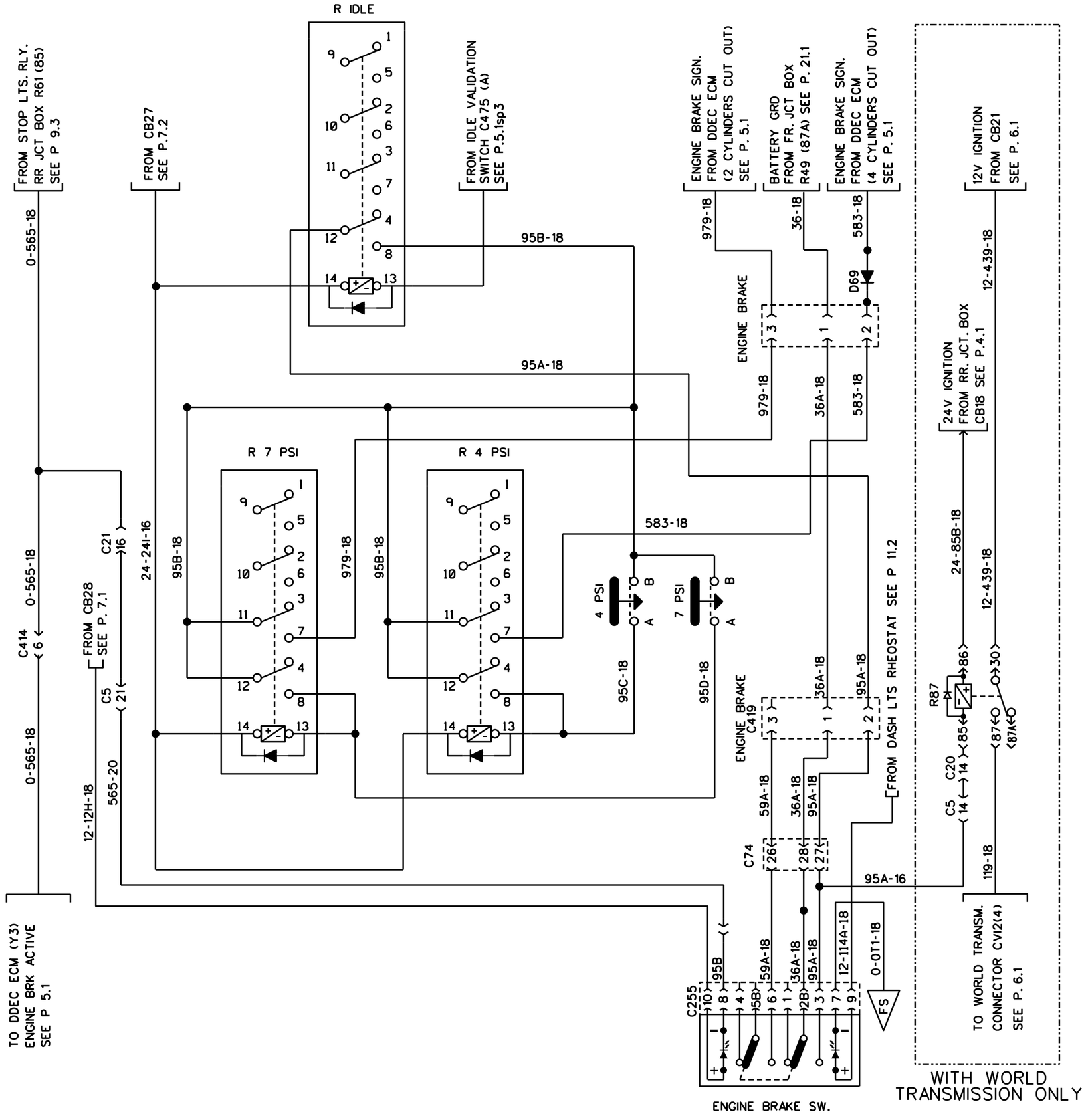

ENGINE BRAKE SYSTEM
(WITH 2 PRESSURE SWITCHS LATCHED)

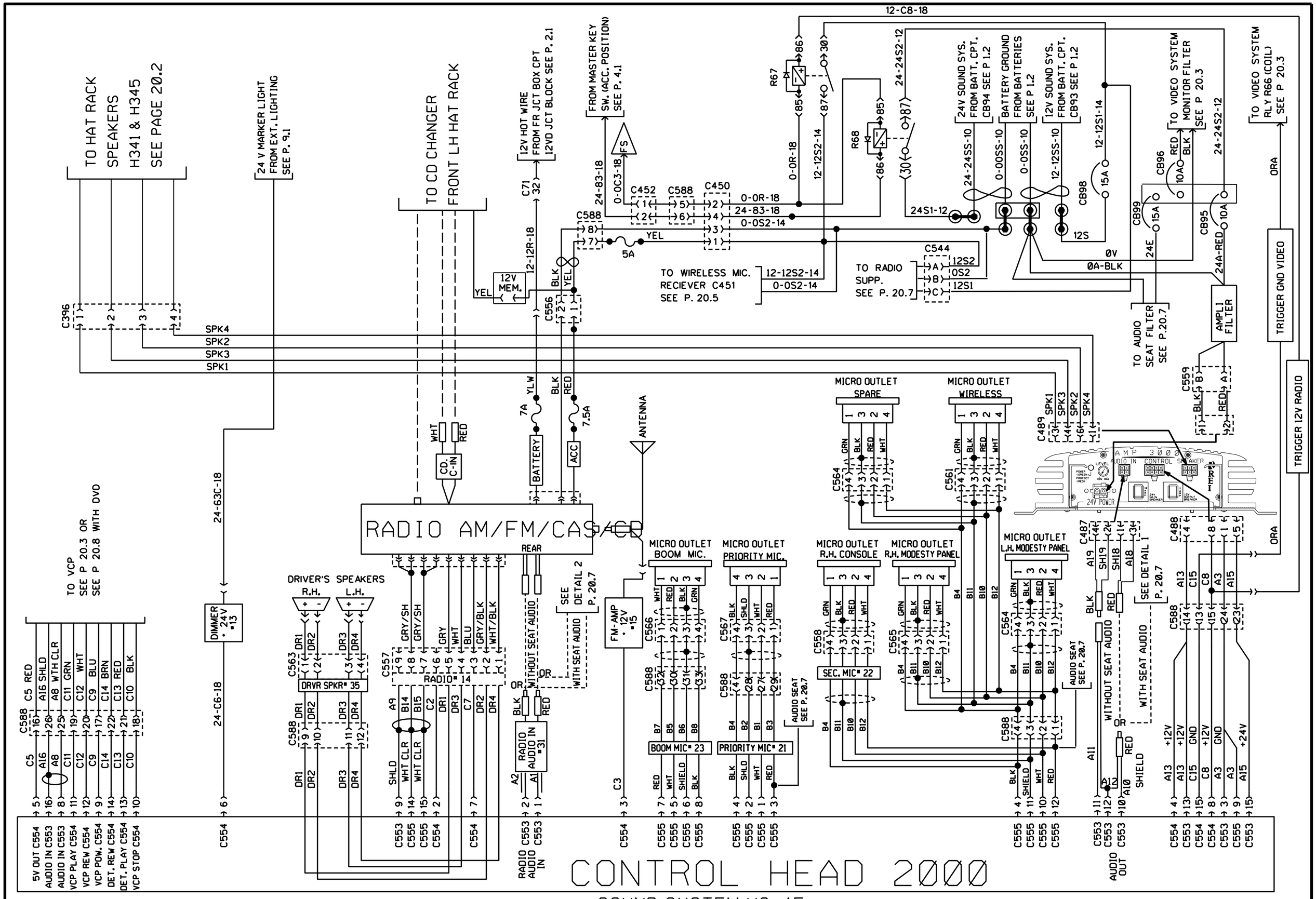

PREVOST	WIRING DIAGRAM	NO: D060976	PAGE: 20.1	REVISION 00

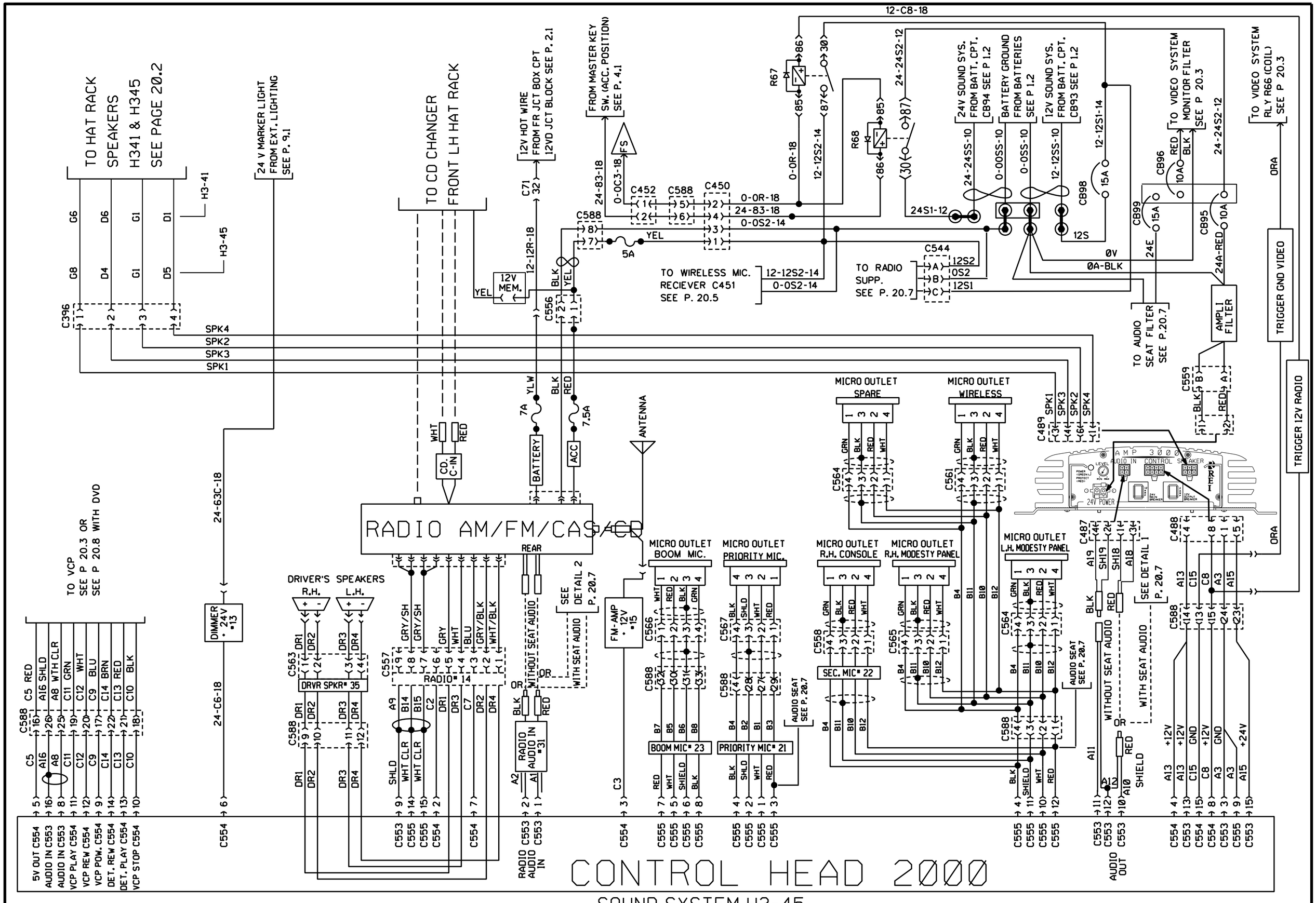

SOUND SYSTEM H3-45

PREVOST	WIRING DIAGRAM	NO: D060976	PAGE: 20.1	REVISION 02

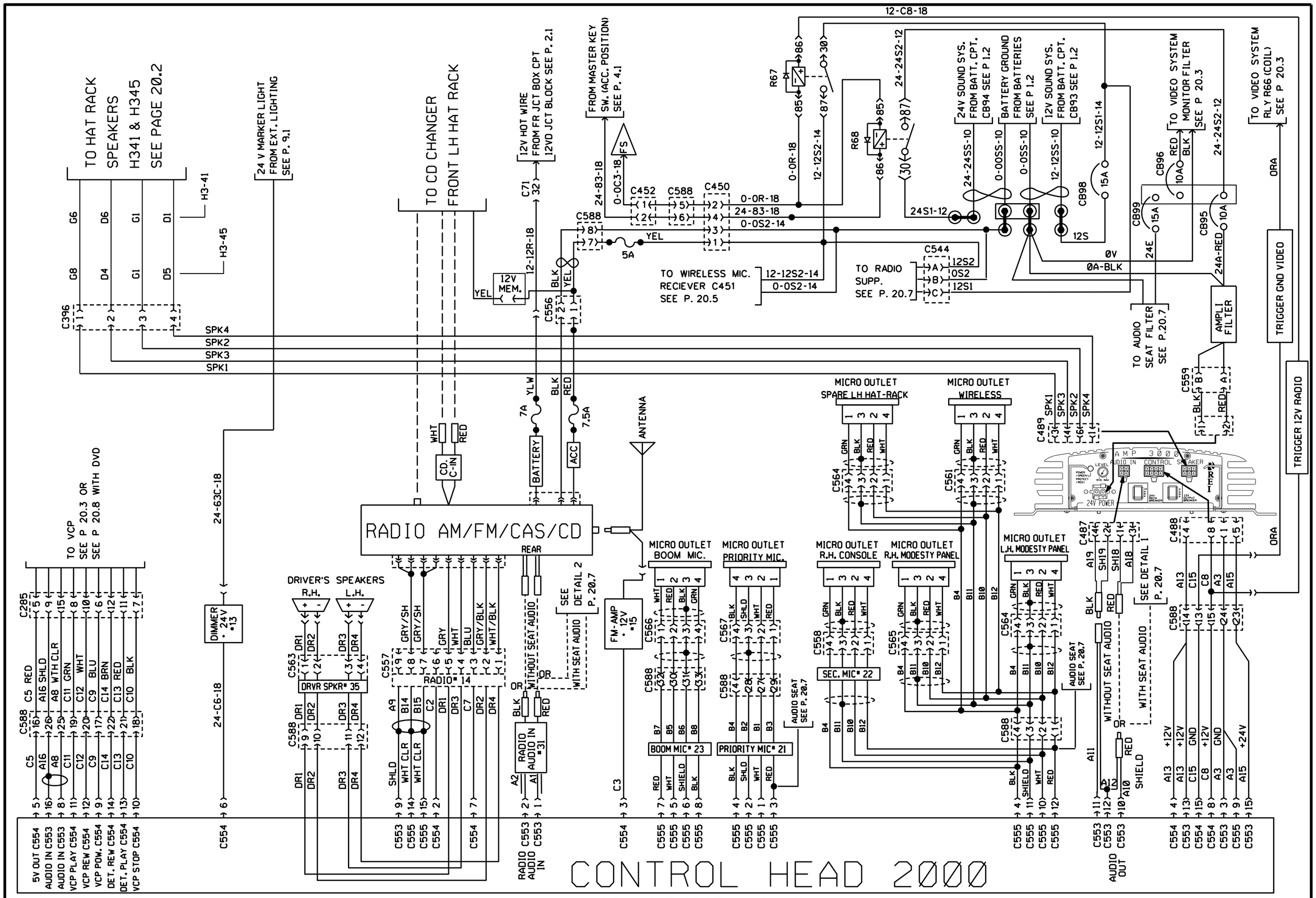

SOUND SYSTEM H3-45

PREVOST	WIRING DIAGRAM	NO: D060976	PAGE: 20.1	REVISION 03

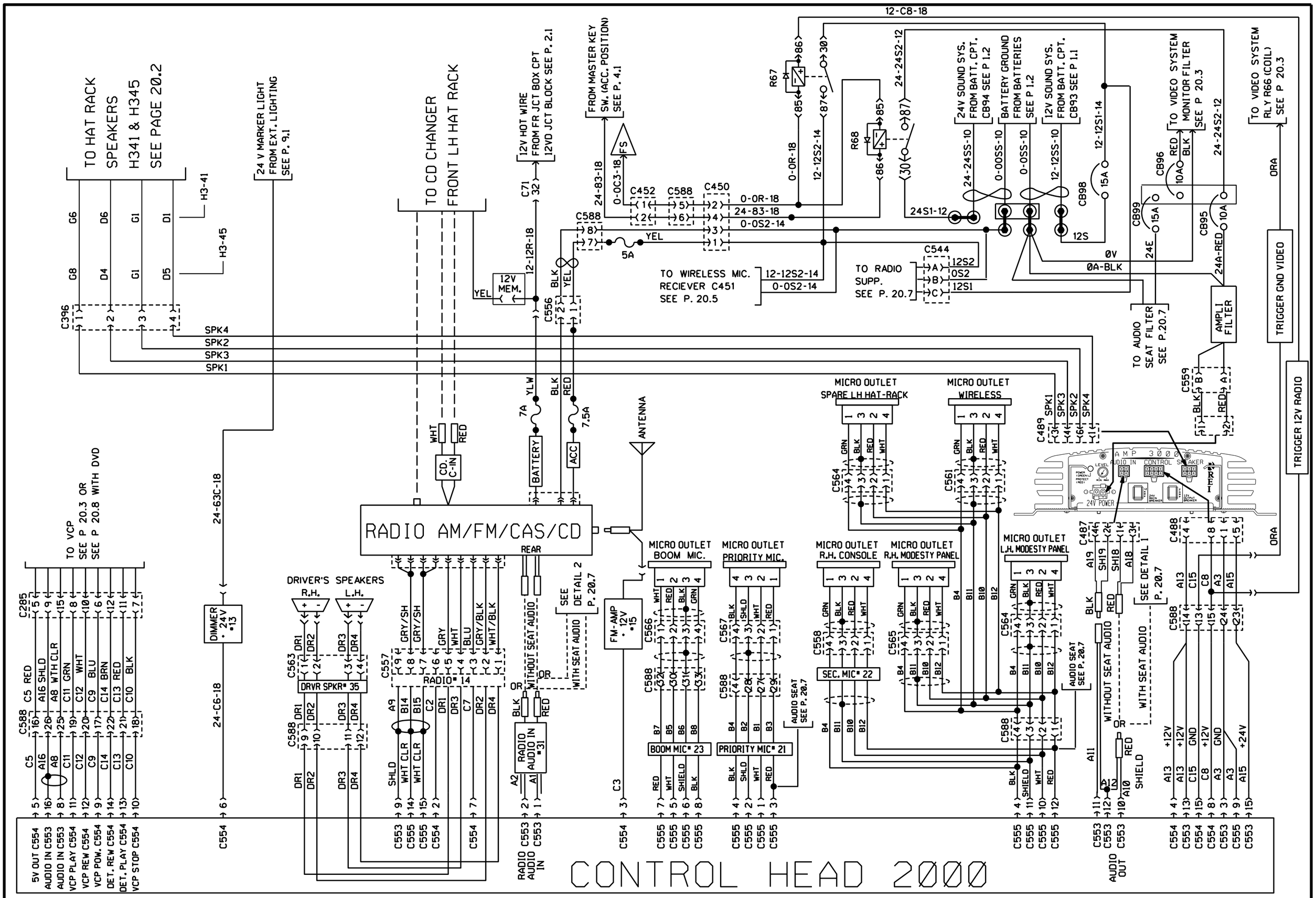

PREVOST	WIRING DIAGRAM	NO: D060976	PAGE: 20.1	REVISION 07

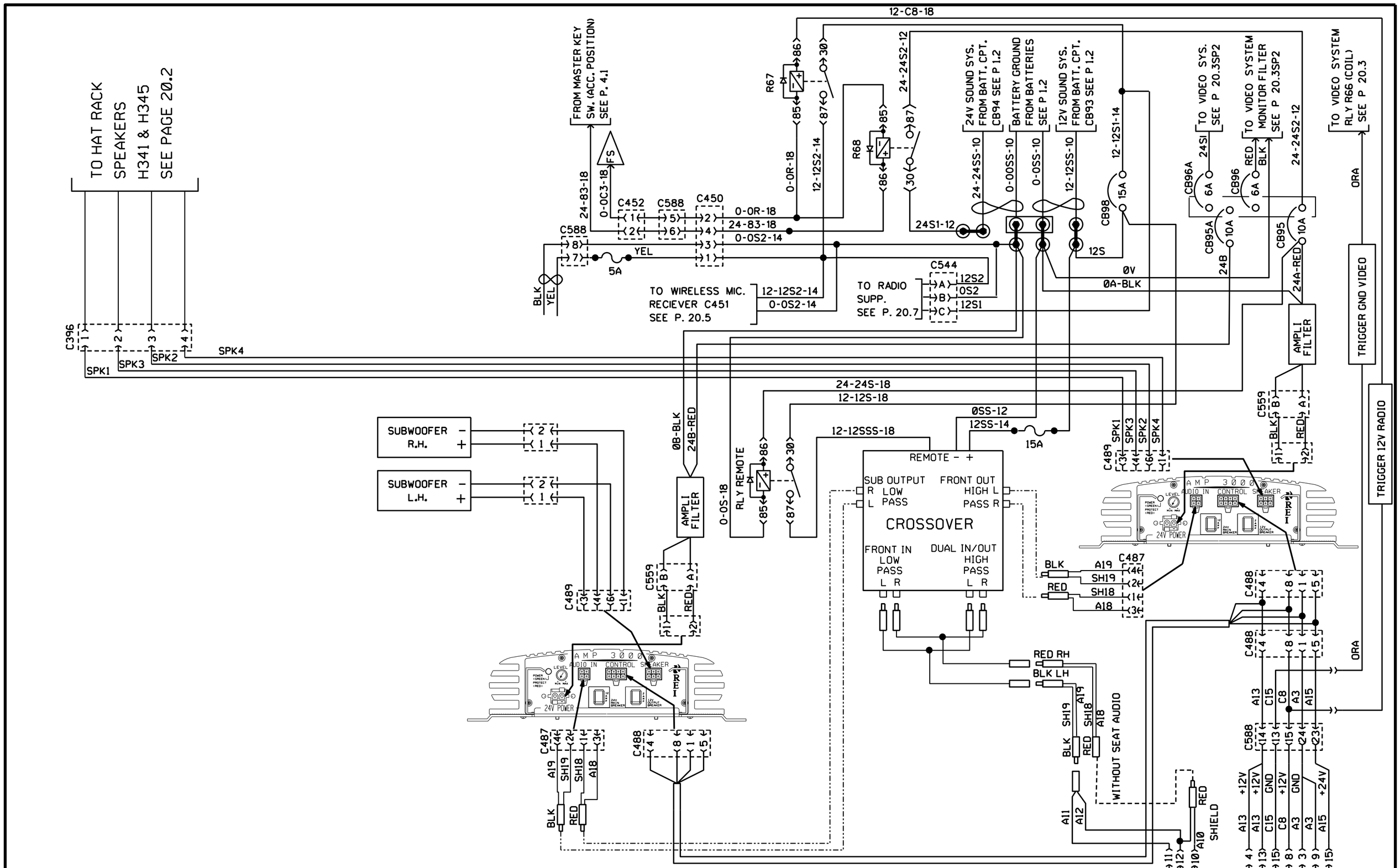

CONTROL HEAD 2000

SOUND SYSTEM H3-45 W/SUBWOOFER W/O SEAT AUDIO

PREVOST	WIRING DIAGRAM	NO: D060976	PAGE: 20.1SP1	REVISION 00

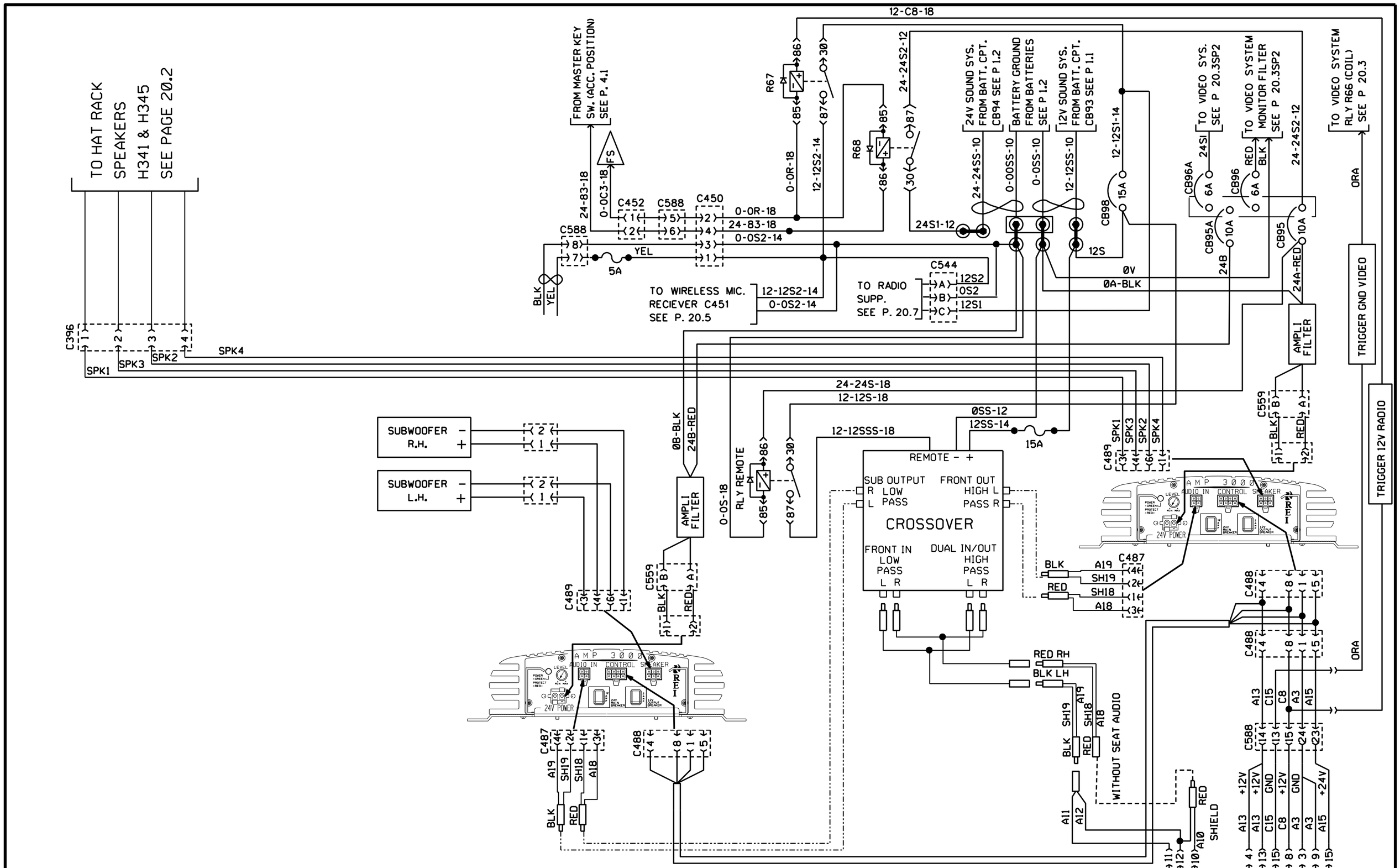

CONTROL HEAD 2000

SOUND SYSTEM H3-45 W/SUBWOOFER W/O SEAT AUDIO

PREVOST	WIRING DIAGRAM	NO: D060976	PAGE: 20.1SP1	REVISION 07

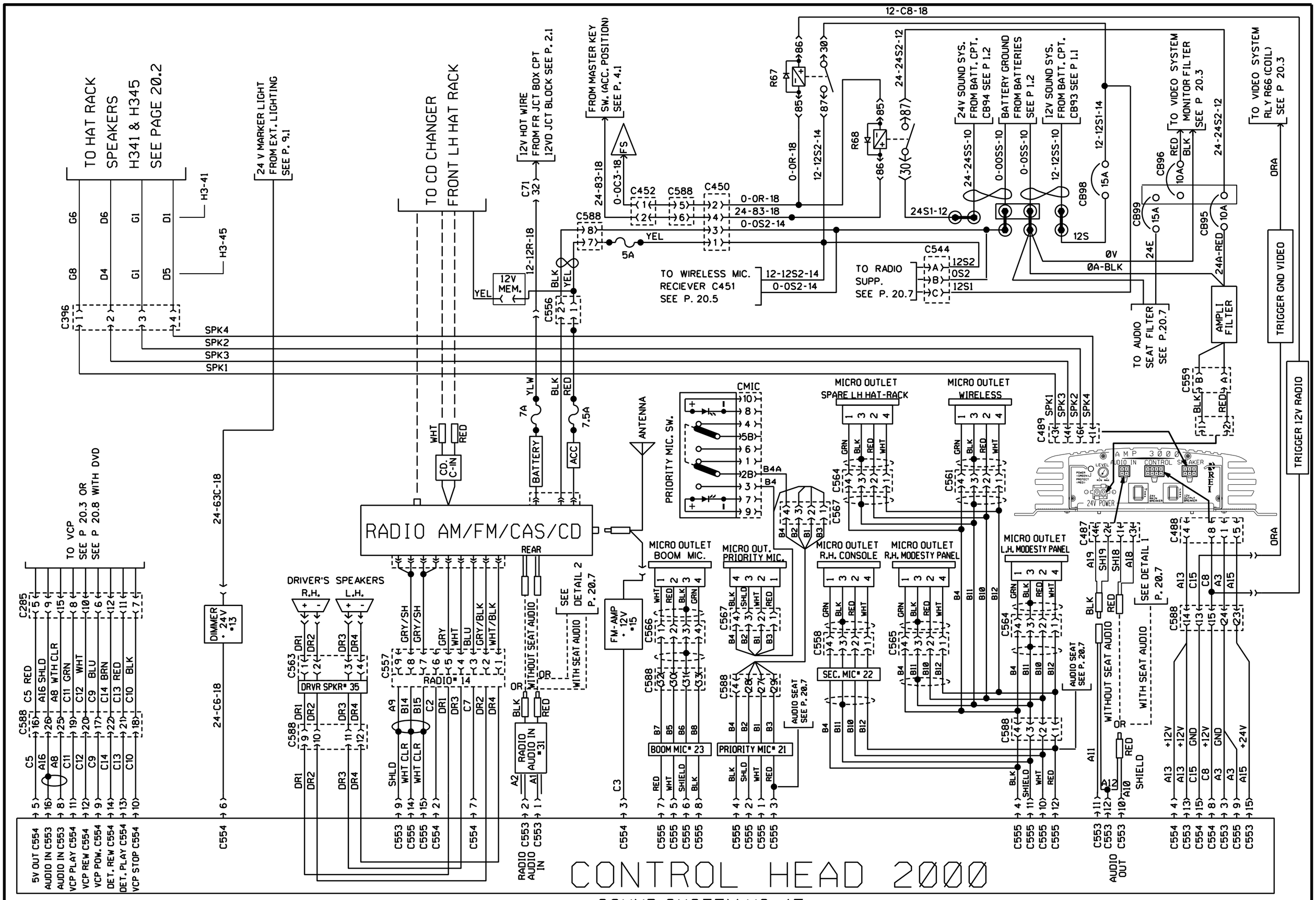

PREVOST	WIRING DIAGRAM	NO: D060976	PAGE: 20.1SP2	REVISION 00

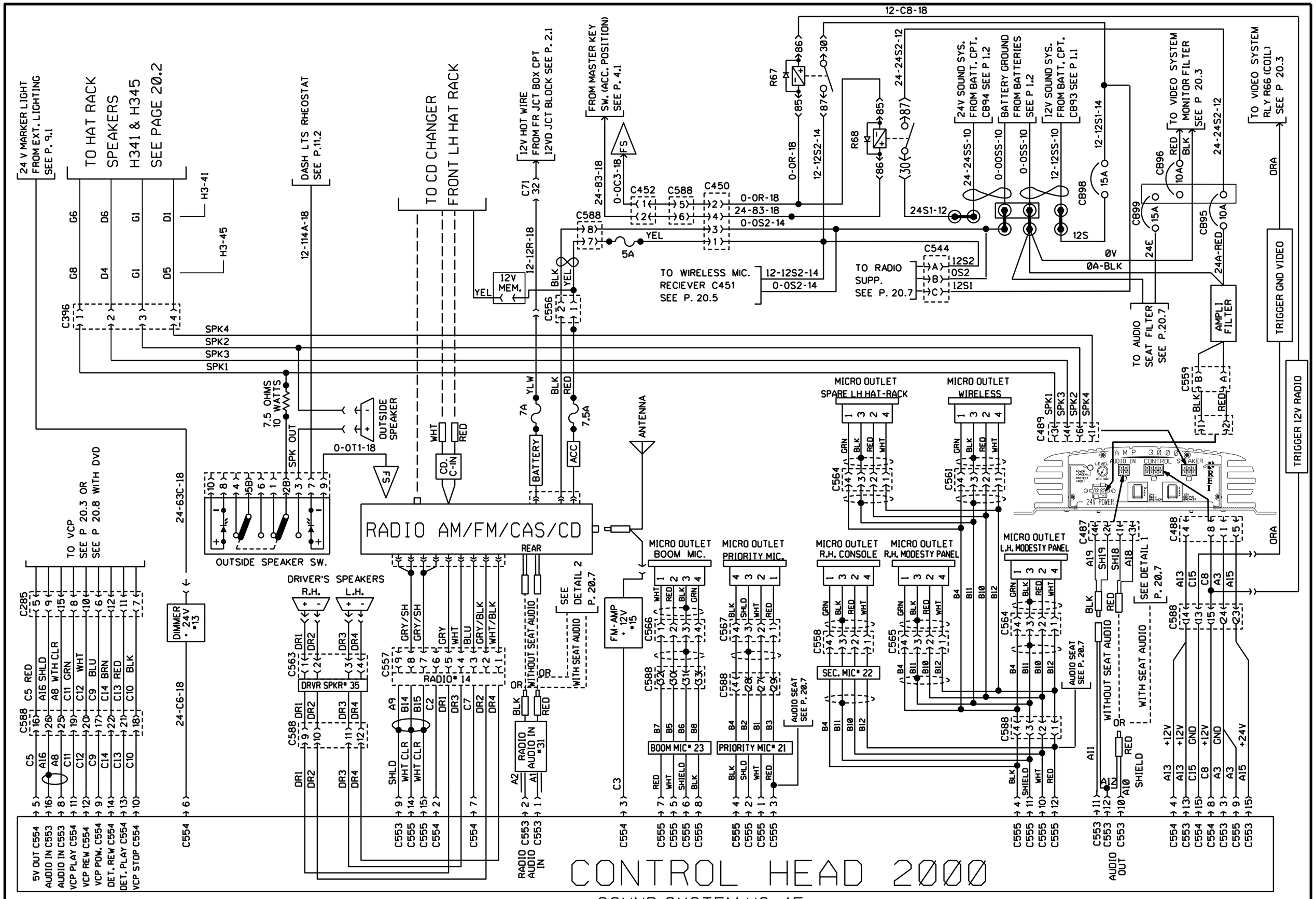

PREVOST	WIRING DIAGRAM	NO: D060976	PAGE: 20.1sp3	REVISION 00

MISSISSIPPI STATE (2004) VIDEO/AUDIO SYSTEM

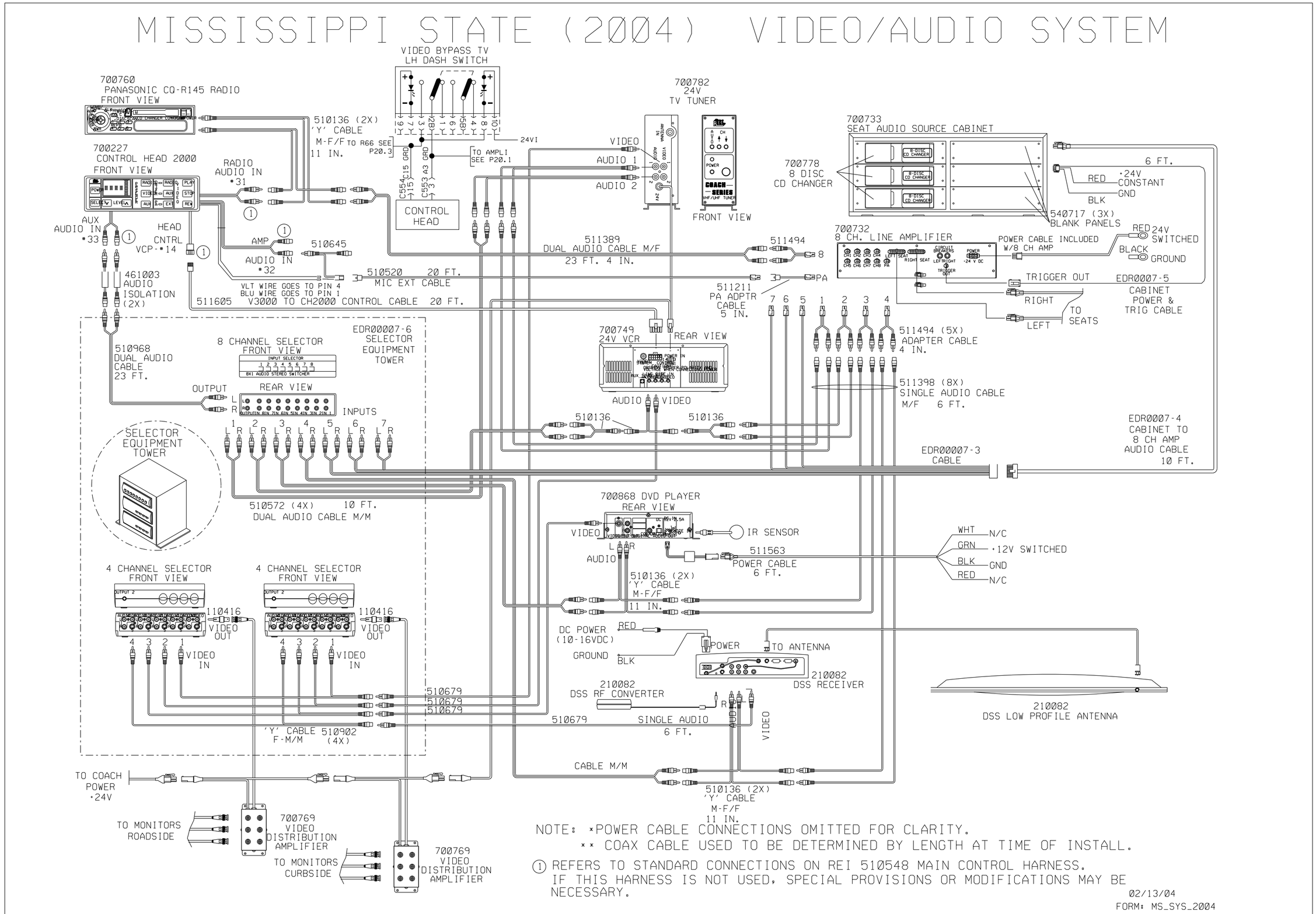

NOTE: *POWER CABLE CONNECTIONS OMITTED FOR CLARITY.
** COAX CABLE USED TO BE DETERMINED BY LENGTH AT TIME OF INSTALL.

① REFERS TO STANDARD CONNECTIONS ON REI 510548 MAIN CONTROL HARNESS. IF THIS HARNESS IS NOT USED, SPECIAL PROVISIONS OR MODIFICATIONS MAY BE NECESSARY.

02/13/04
FORM: MS_SYS_2004

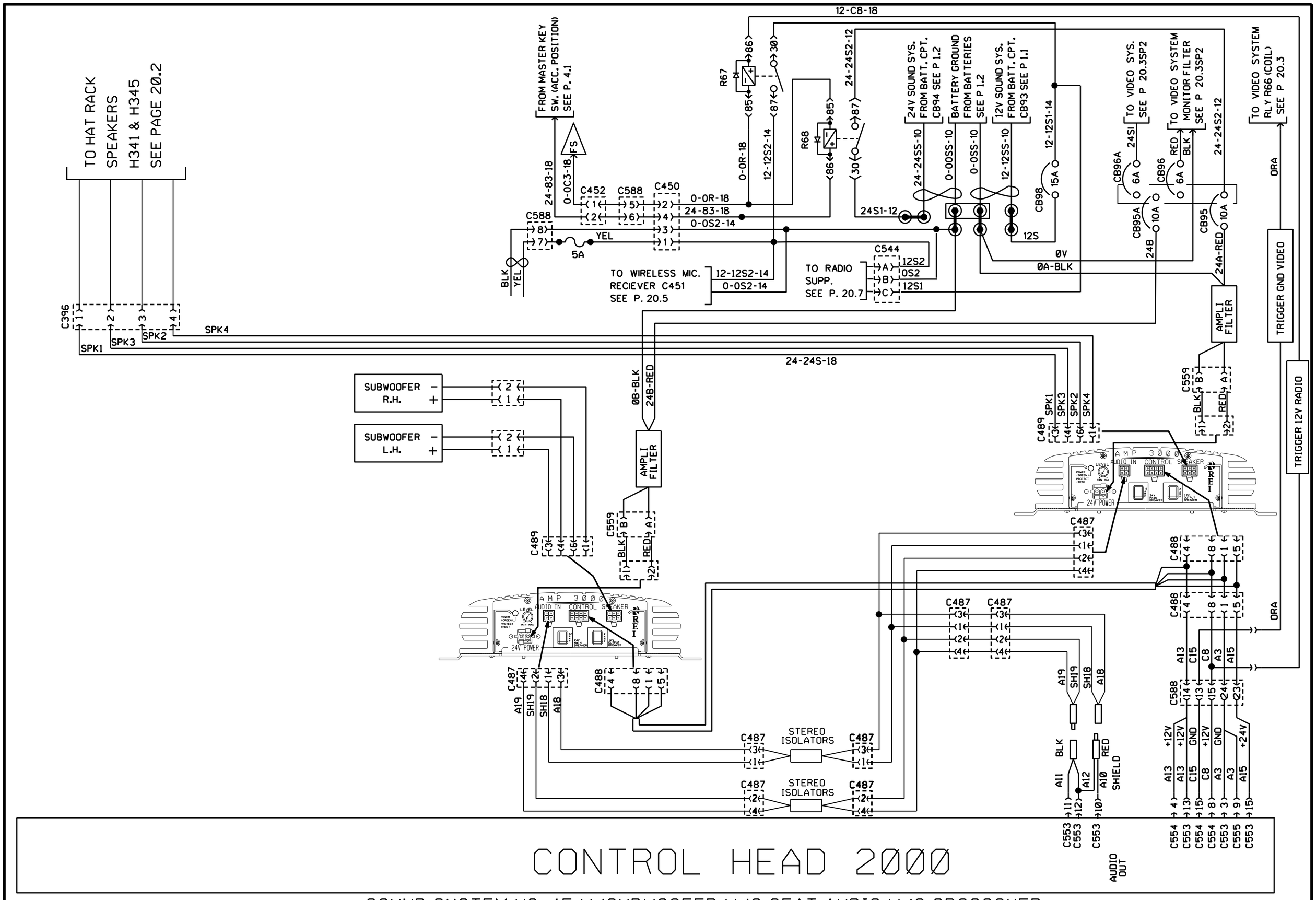

CONTROL HEAD 2000

SOUND SYSTEM H3-45 W/SUBWOOFER W/O SEAT AUDIO W/O CROSSOVER

PREVOST	WIRING DIAGRAM	NO: D060976	PAGE: 20.1SP5	REVISION 00

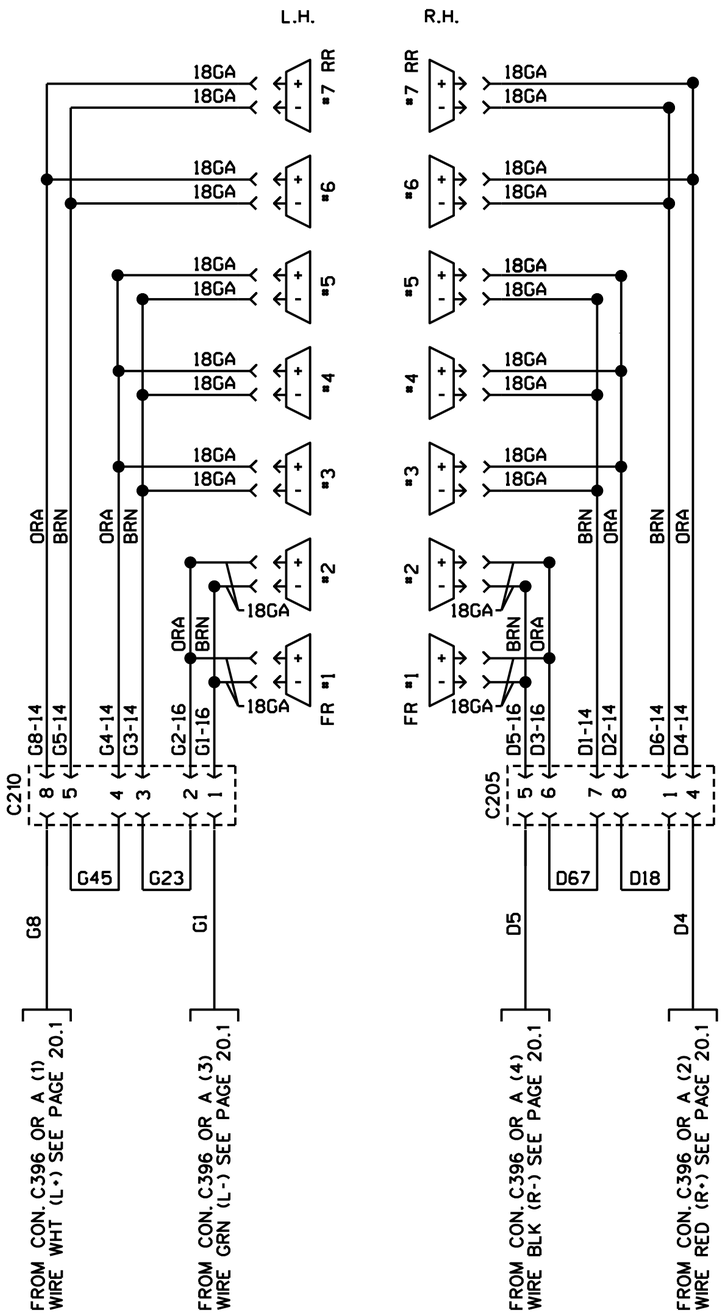

HAT RACK SPEAKERS H3-45

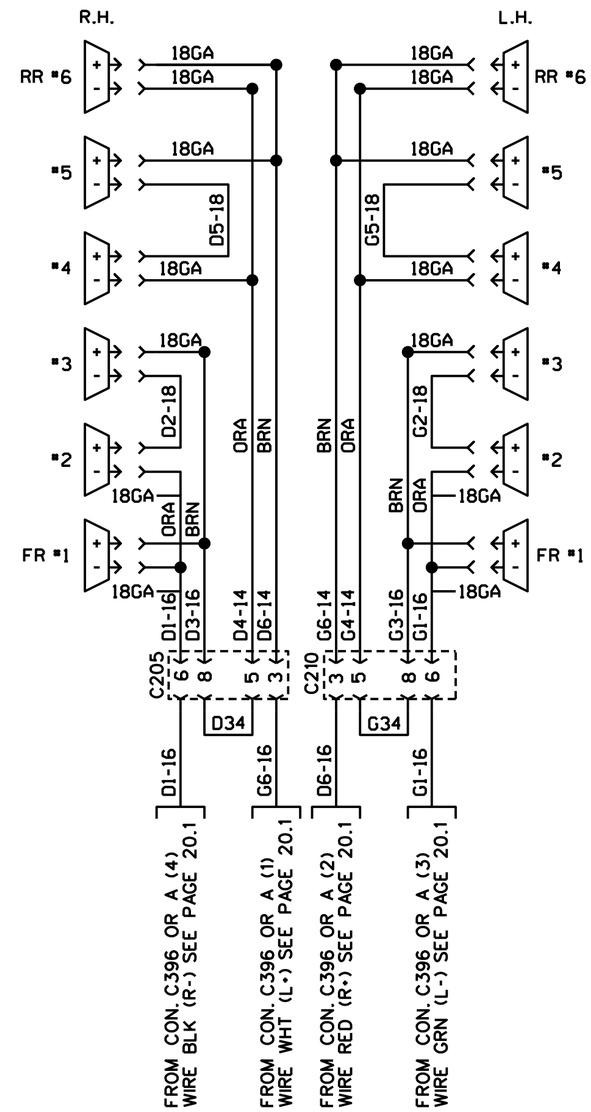

HAT RACK SPEAKERS H3-41

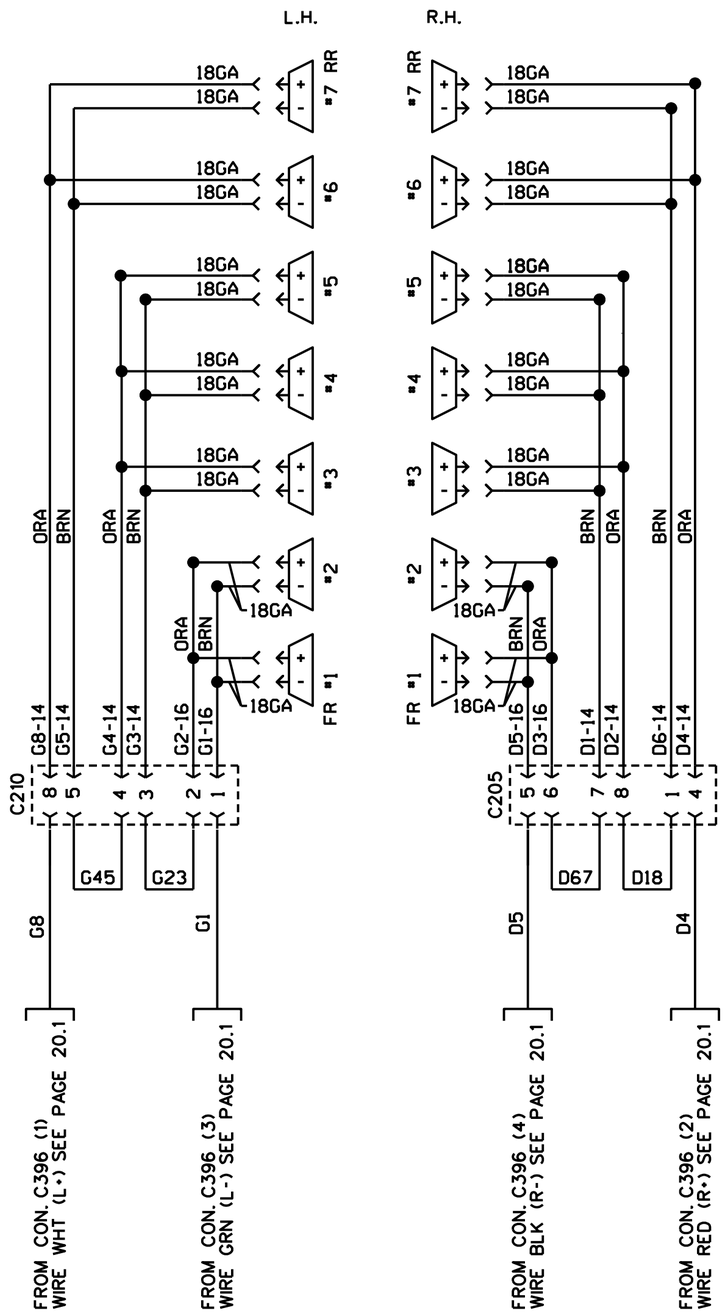

HAT RACK SPEAKERS H3-45

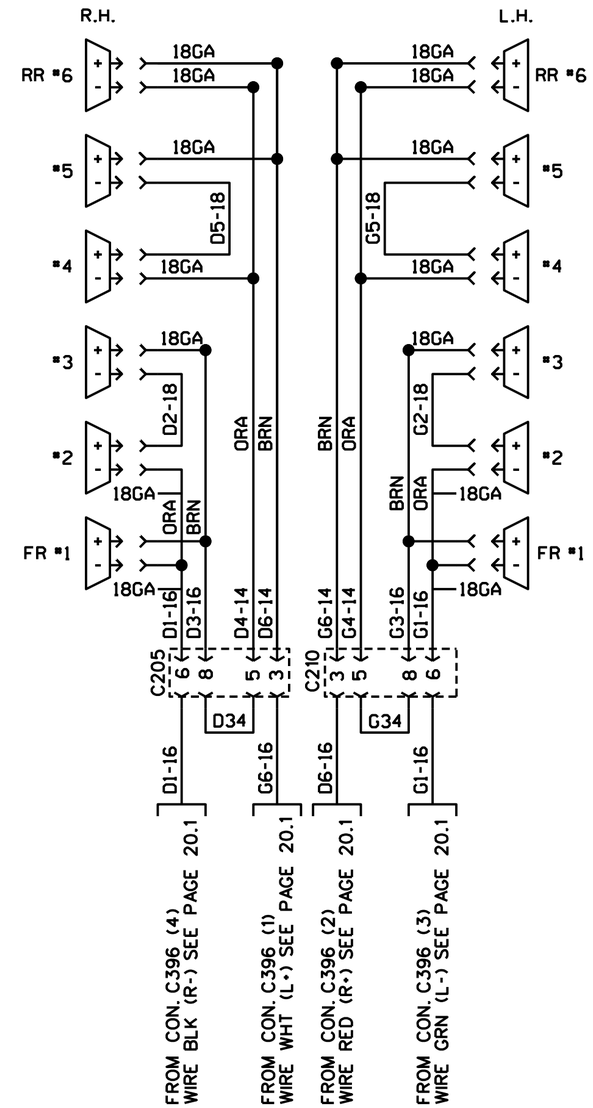

HAT RACK SPEAKERS H3-41

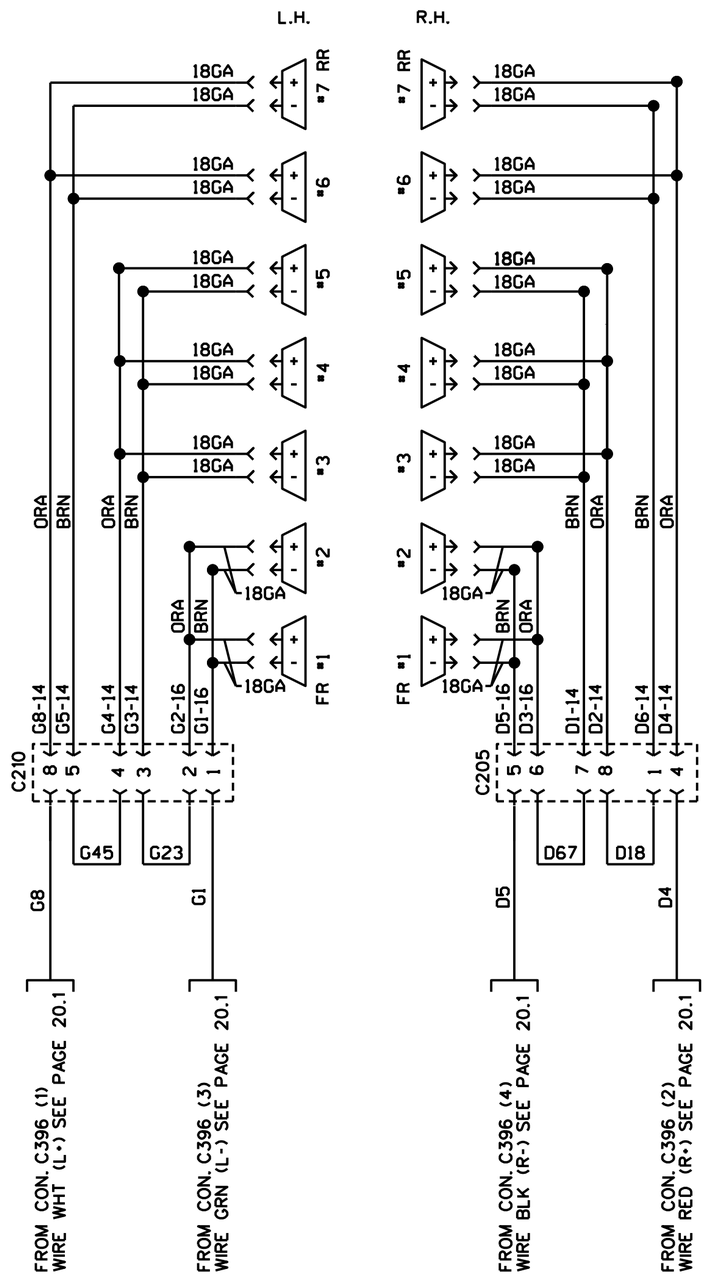

HAT RACK SPEAKERS H3-45

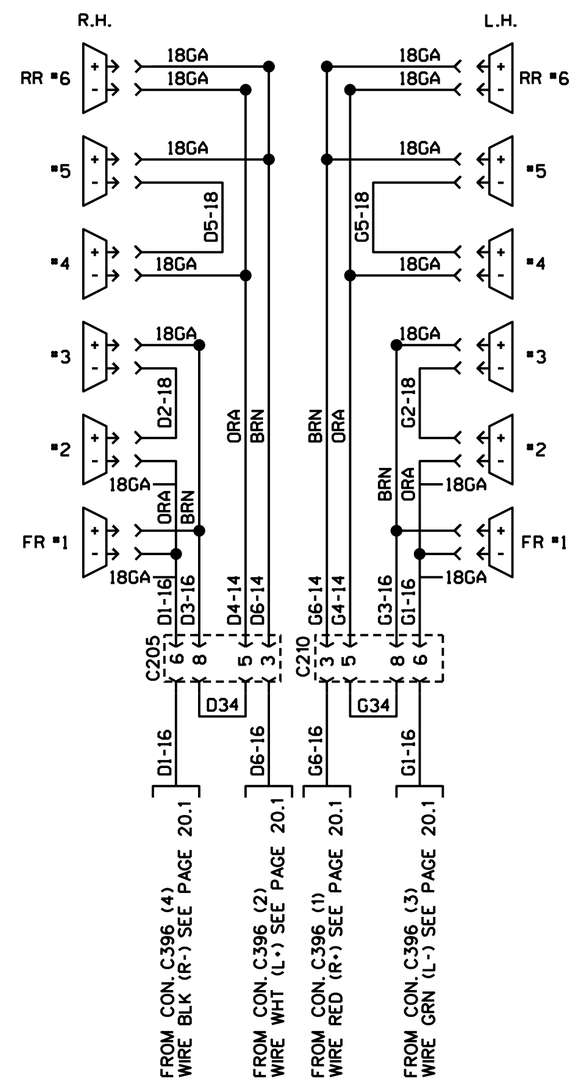

HAT RACK SPEAKERS H3-41

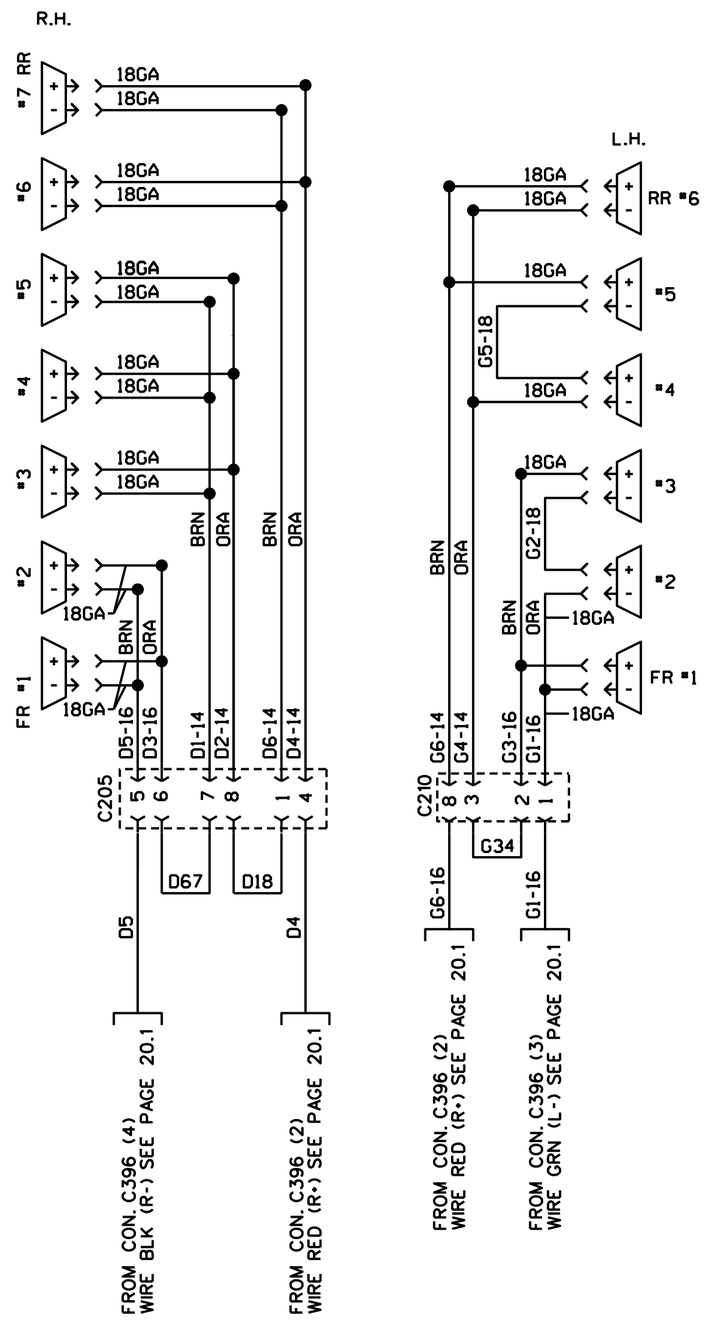

HAT RACK SPEAKERS H3-45

(L.H. HAT RACK SPECIAL ARRANGEMENT H341)

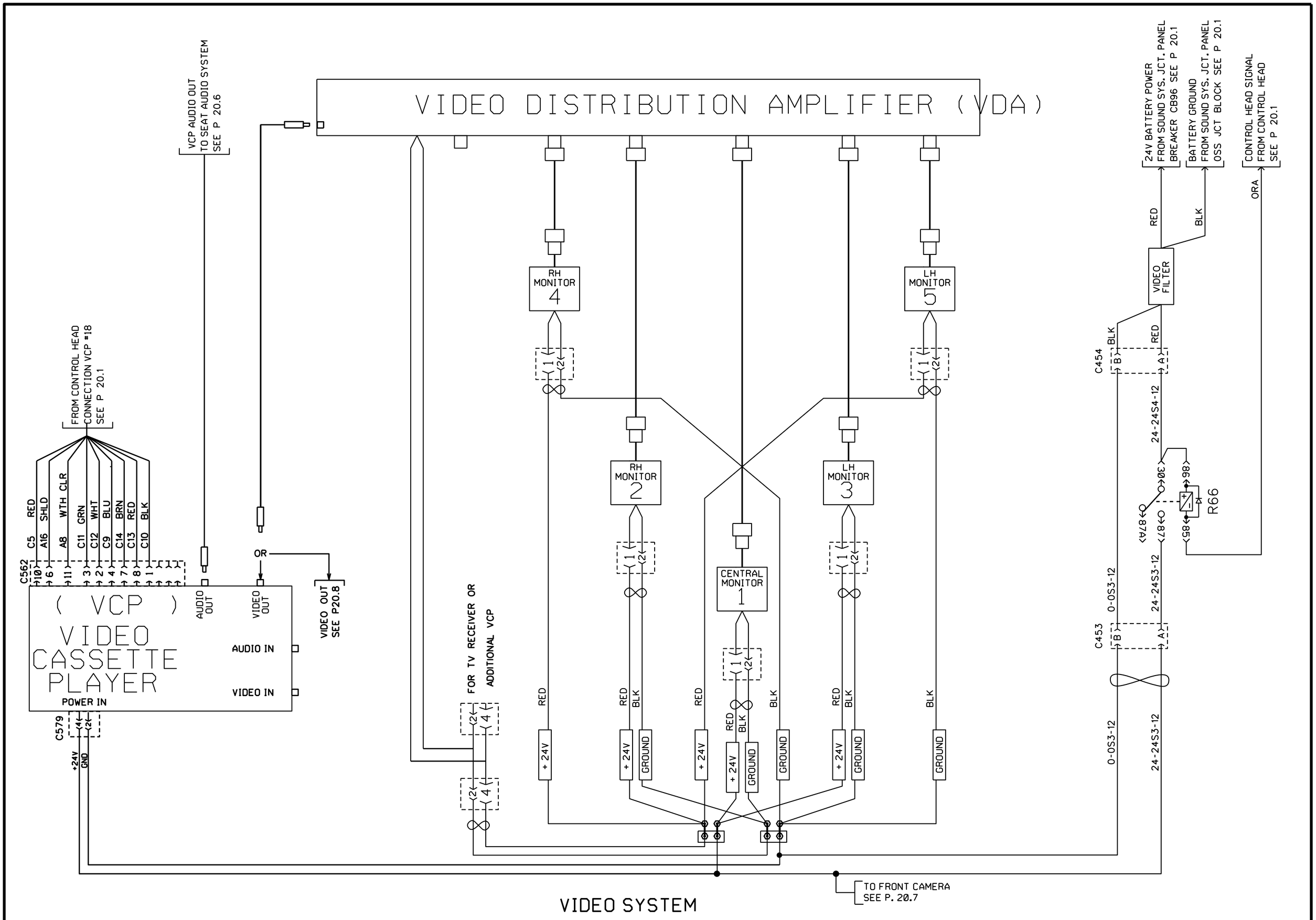

VIDEO SYSTEM

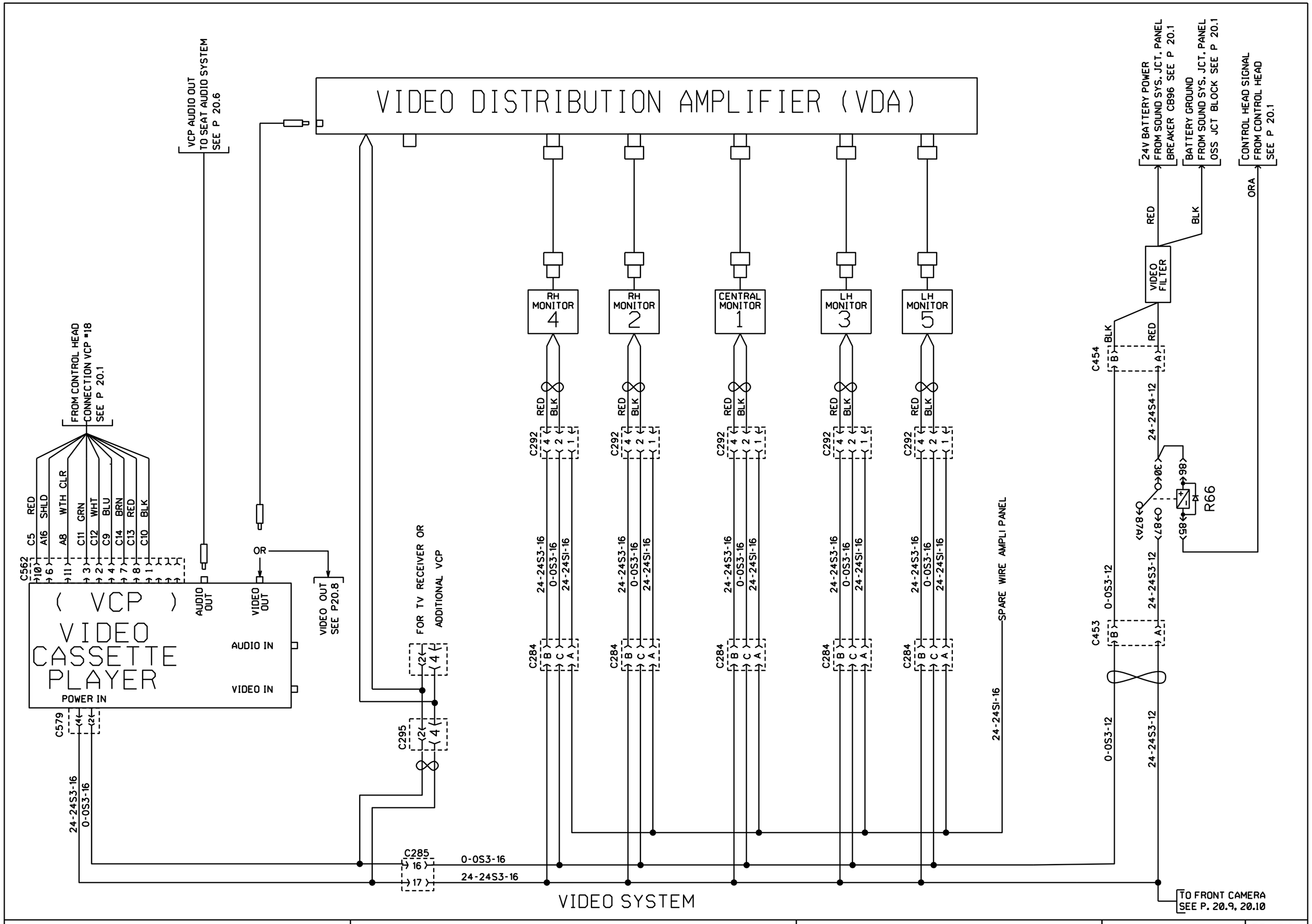
VIDEO DISTRIBUTION AMPLIFIER (VDA)
VCP AUDIO OUT TO SEAT AUDIO SYSTEM SEE P 20.6
FROM CONTROL HEAD CONNECTION VCP #18 SEE P 20.1
C562
C5 RED
A16 SHLD
A8 WTH CLR
C11 GRN
C12 WHT
C9 BLU
C14 BRN
C13 RED
C10 BLK
(VCP)
VIDEO CASSETTE PLAYER
AUDIO OUT
VIDEO OUT
AUDIO IN
VIDEO IN
POWER IN
OR
VIDEO OUT SEE P20.8
C579
24-24S3-16
0-0S3-16
FOR TV RECEIVER OR ADDITIONAL VCP
C295
C285
0-0S3-16
24-24S3-16
RH MONITOR 4
RH MONITOR 2
CENTRAL MONITOR 1
LH MONITOR 3
LH MONITOR 5
RED
BLK
C292
C284
SPARE WIRE AMPLI PANEL
24-24SI-16
24V BATTERY POWER FROM SOUND SYS. JCT. PANEL BREAKER CB96 SEE P 20.1
BATTERY GROUND FROM SOUND SYS. JCT. PANEL OSS JCT BLOCK SEE P 20.1
CONTROL HEAD SIGNAL FROM CONTROL HEAD SEE P 20.1
ORA
VIDEO FILTER
C454
24-24S4-12
30
86
87A
87
85
R66
C453
0-0S3-12
24-24S3-12
TO FRONT CAMERA SEE P. 20.9, 20.10
VIDEO SYSTEM

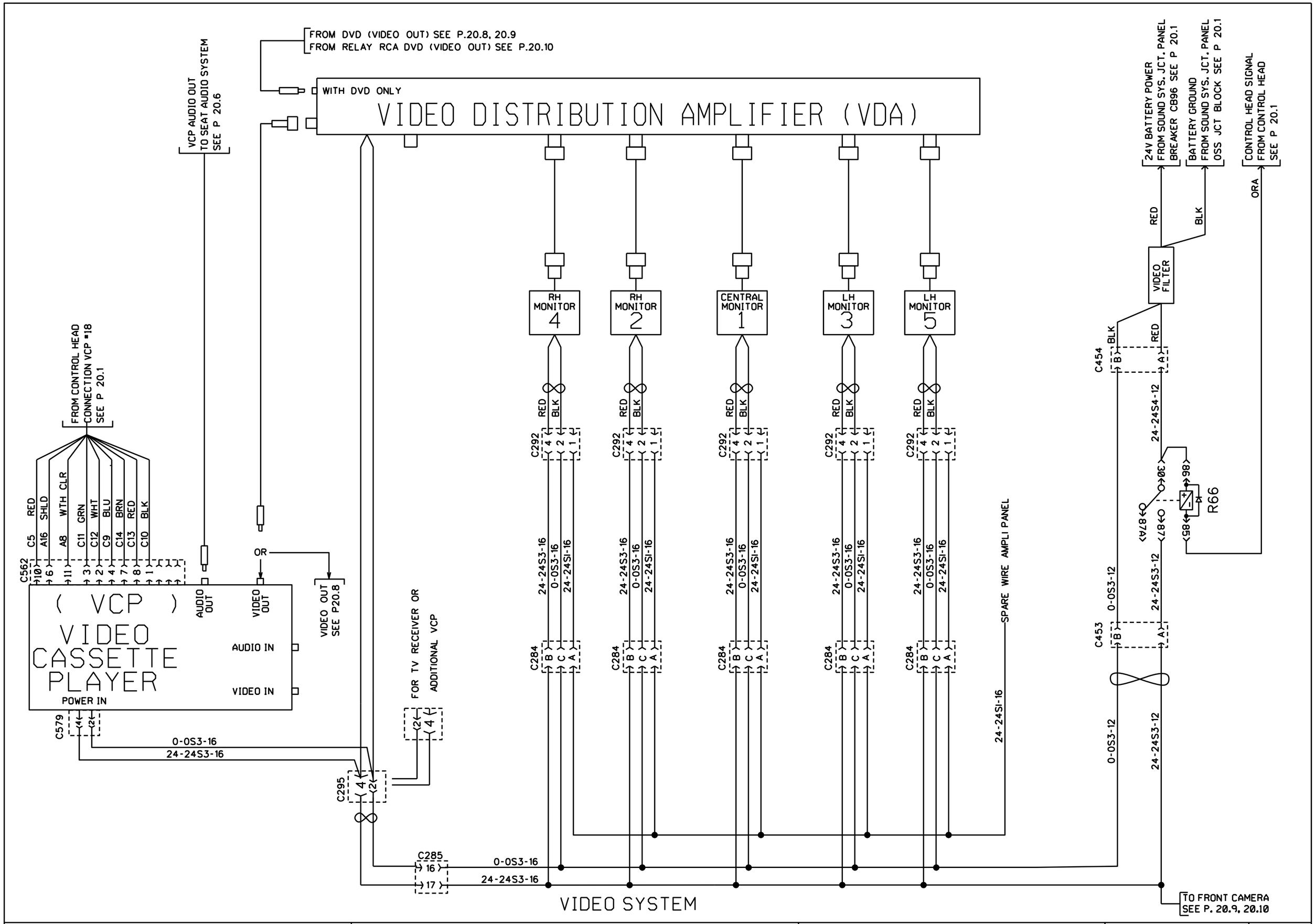

PREVOST	WIRING DIAGRAM	NO: D060976	PAGE: 20.3	REVISION 06

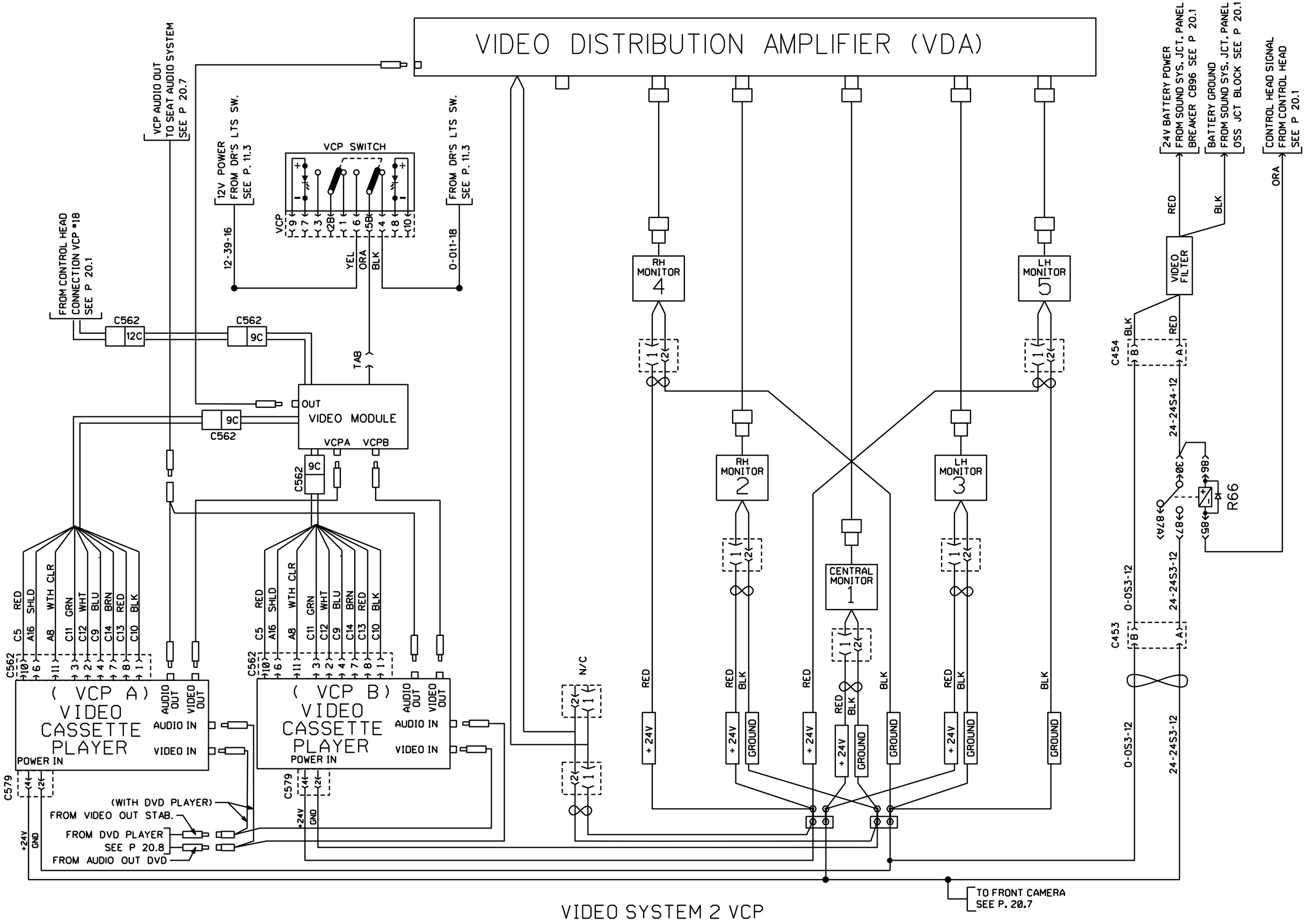

VIDEO SYSTEM 2 VCP

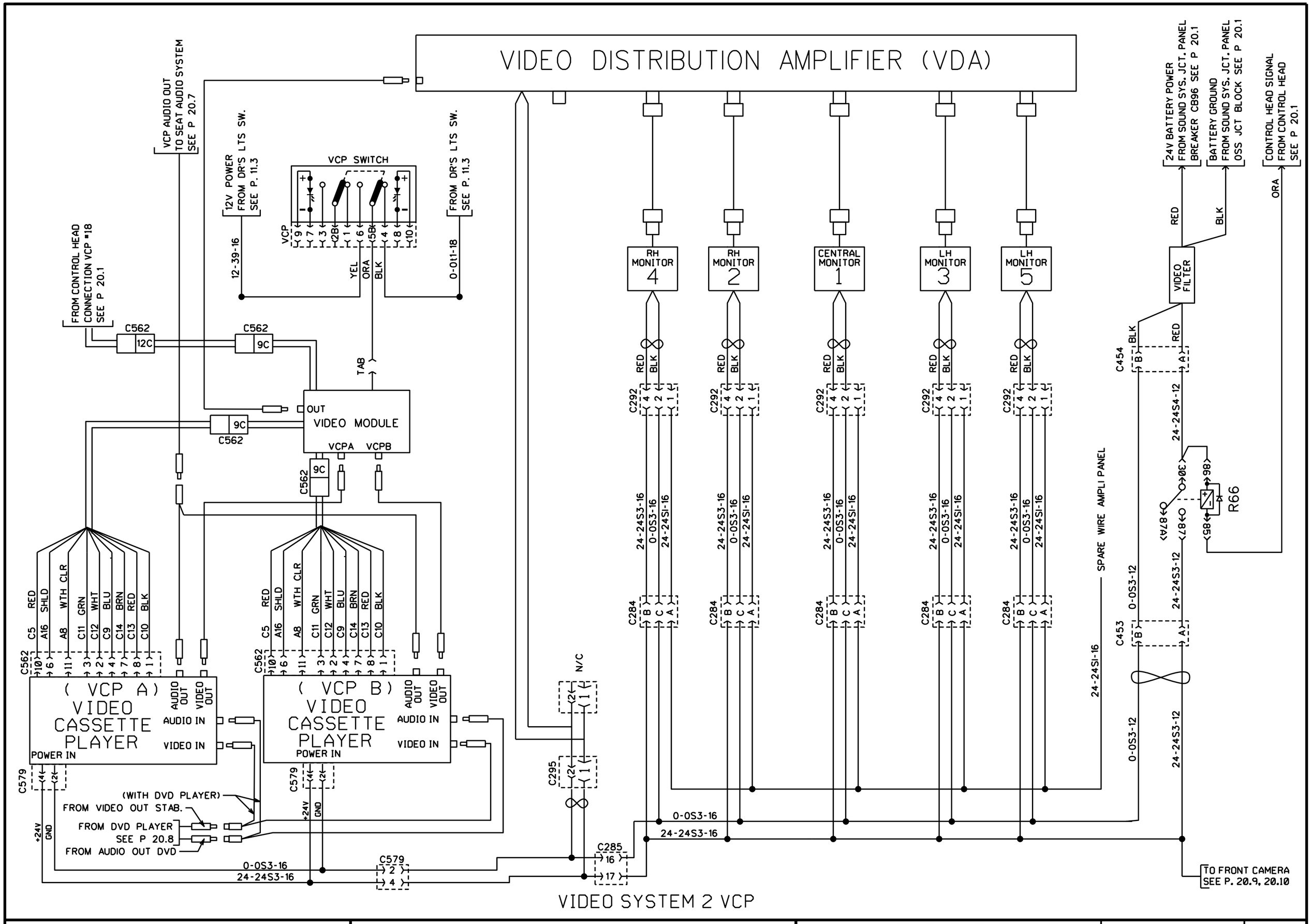

VIDEO SYSTEM 2 VCP

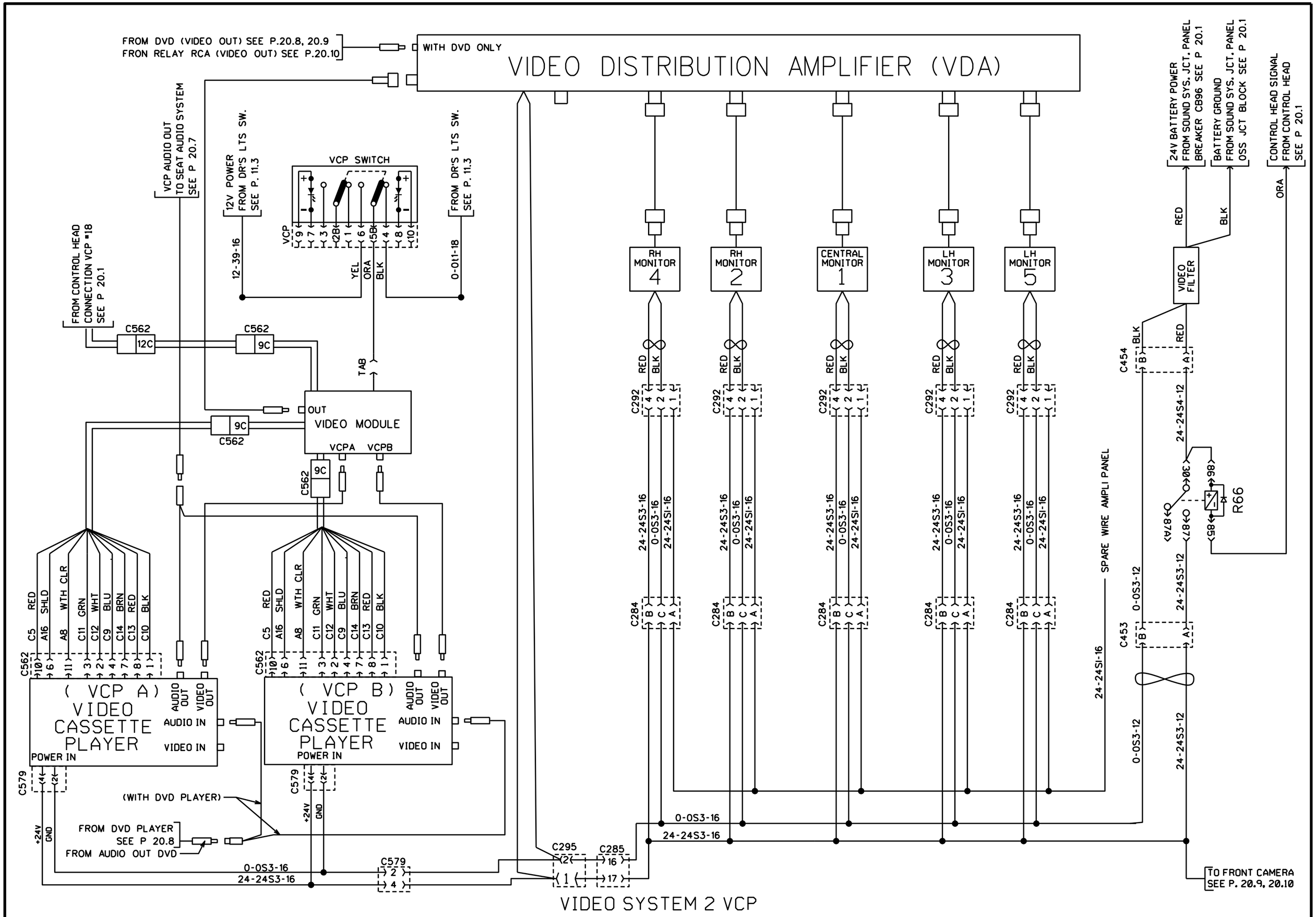

VIDEO SYSTEM 2 VCP

PREVOST	WIRING DIAGRAM	NO: D060976	PAGE: 20.3 SP1	REVISION 06

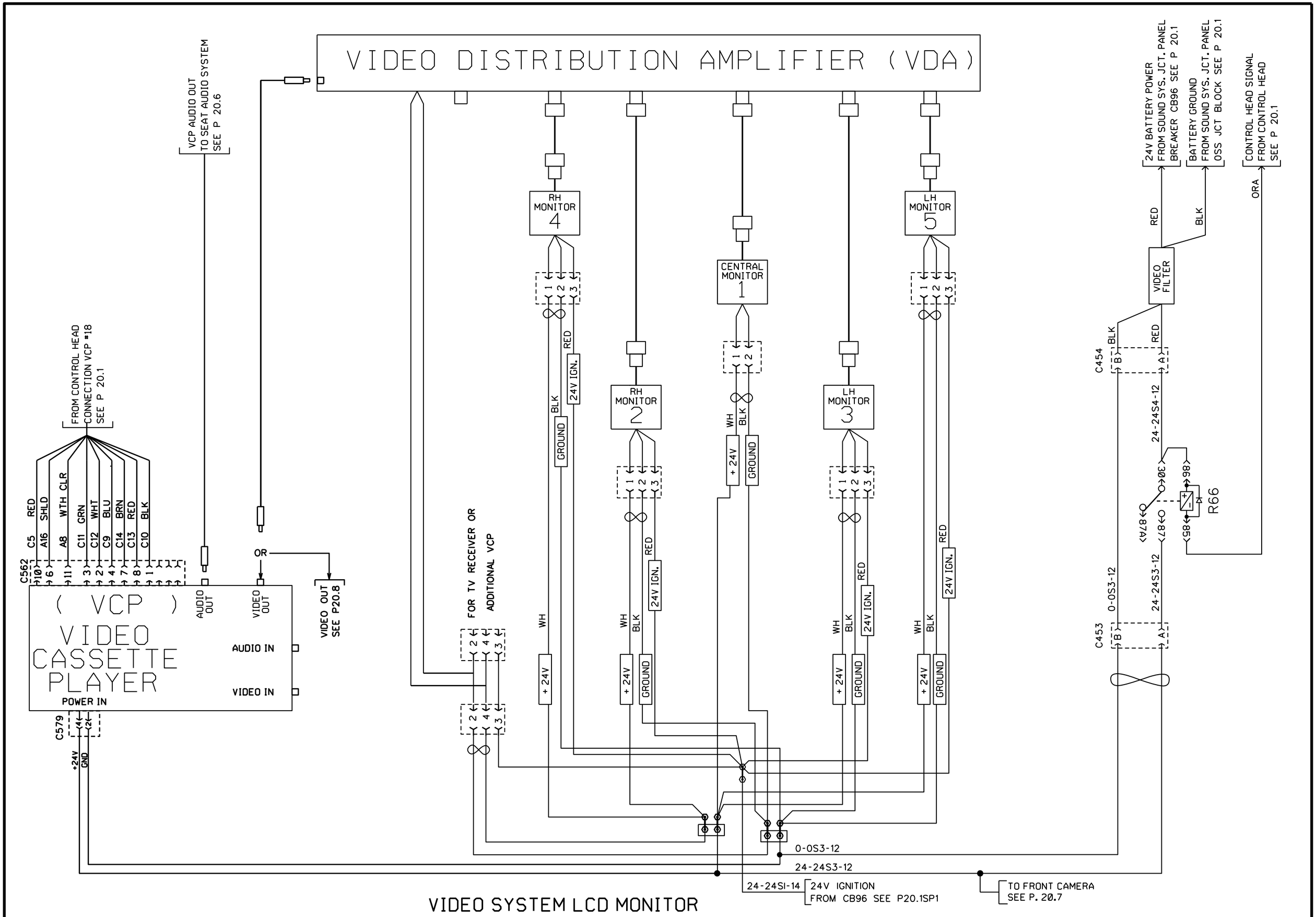

VIDEO SYSTEM LCD MONITOR

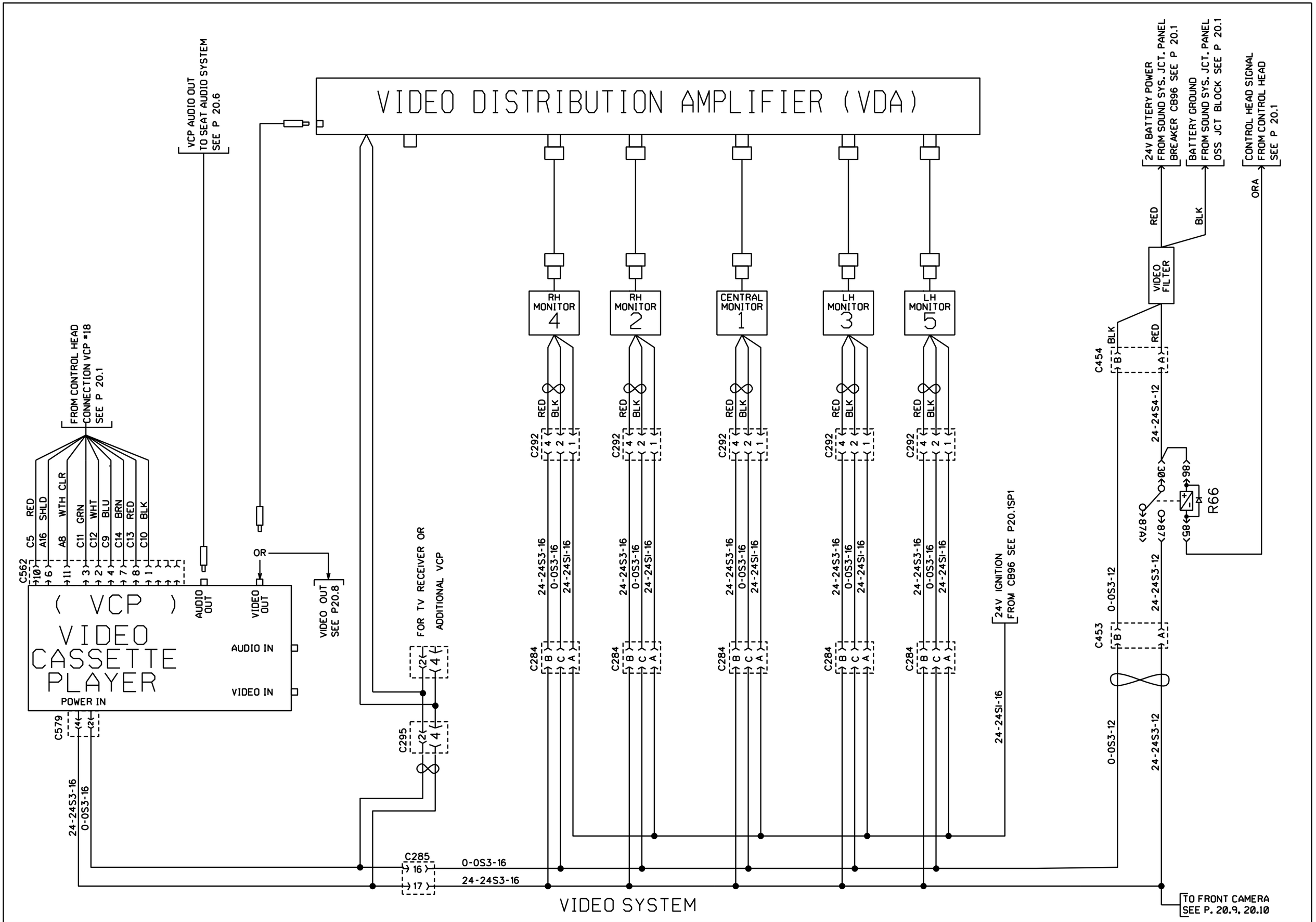

PREVOST	WIRING DIAGRAM	NO: D060976	PAGE: 20.3SP2	REVISION 03

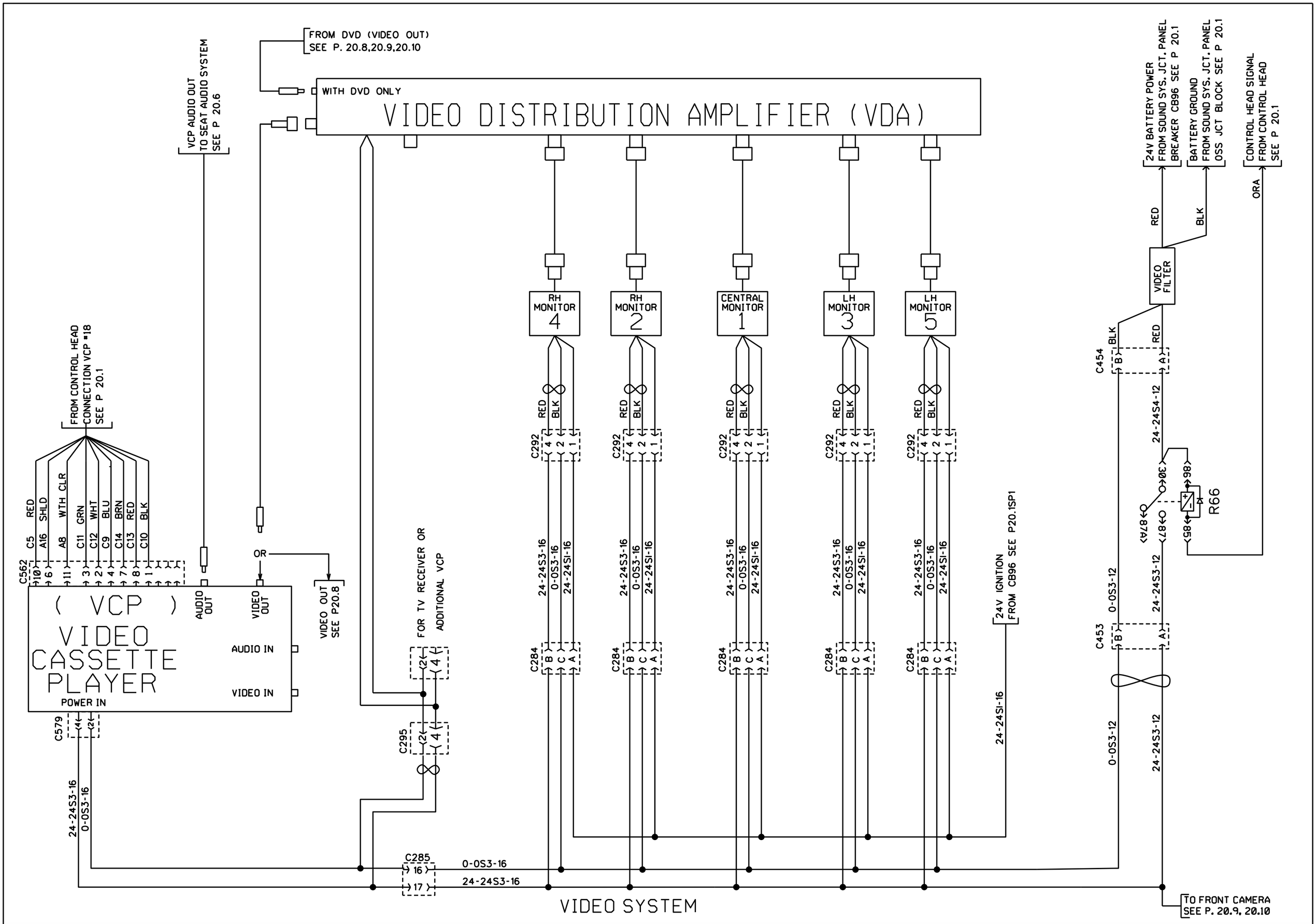

PREVOST	WIRING DIAGRAM	NO: D060976	PAGE: 20.3SP2	REVISION 05

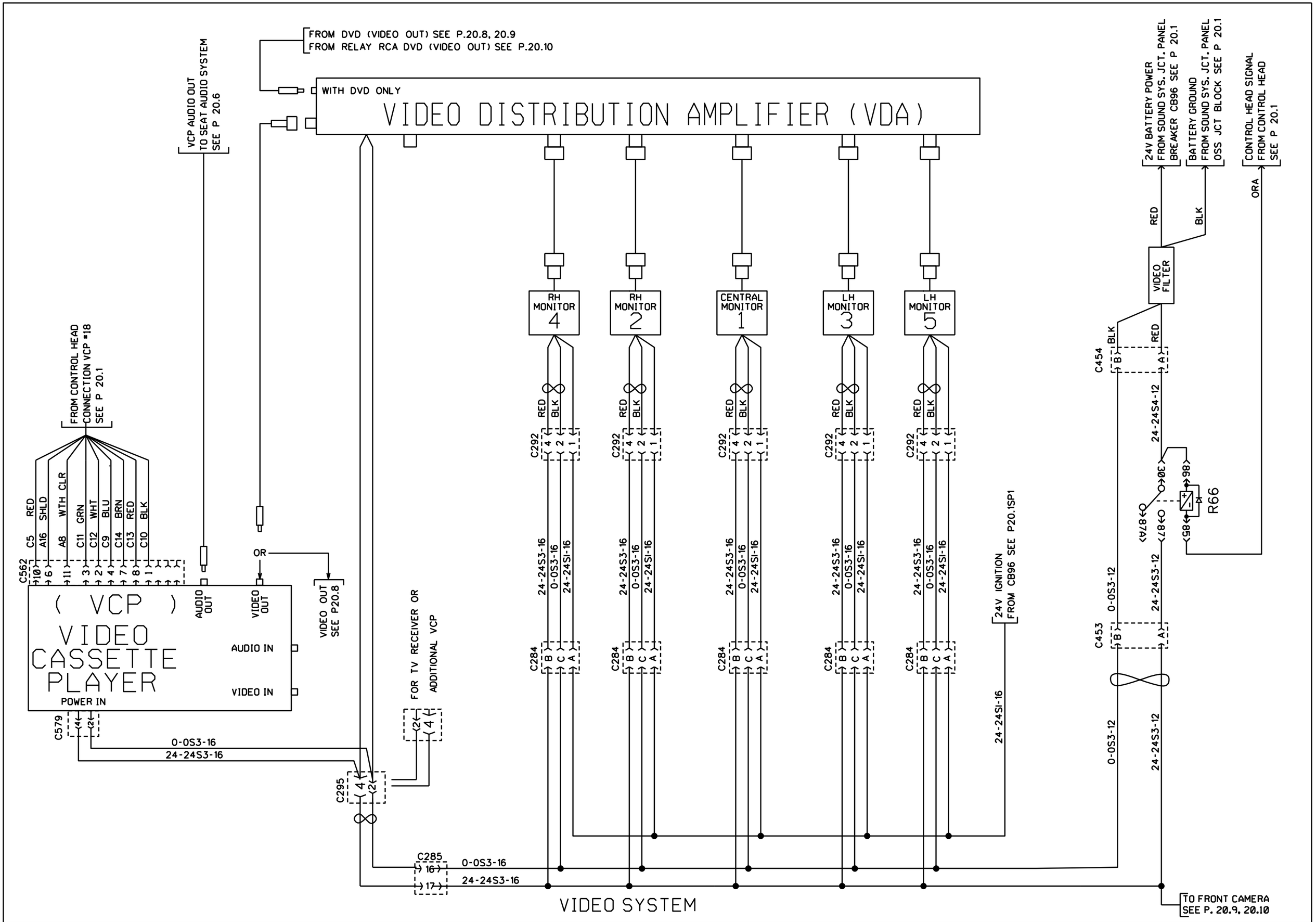

PREVOST	WIRING DIAGRAM	NO: D060976	PAGE: 20.3SP2	REVISION 06

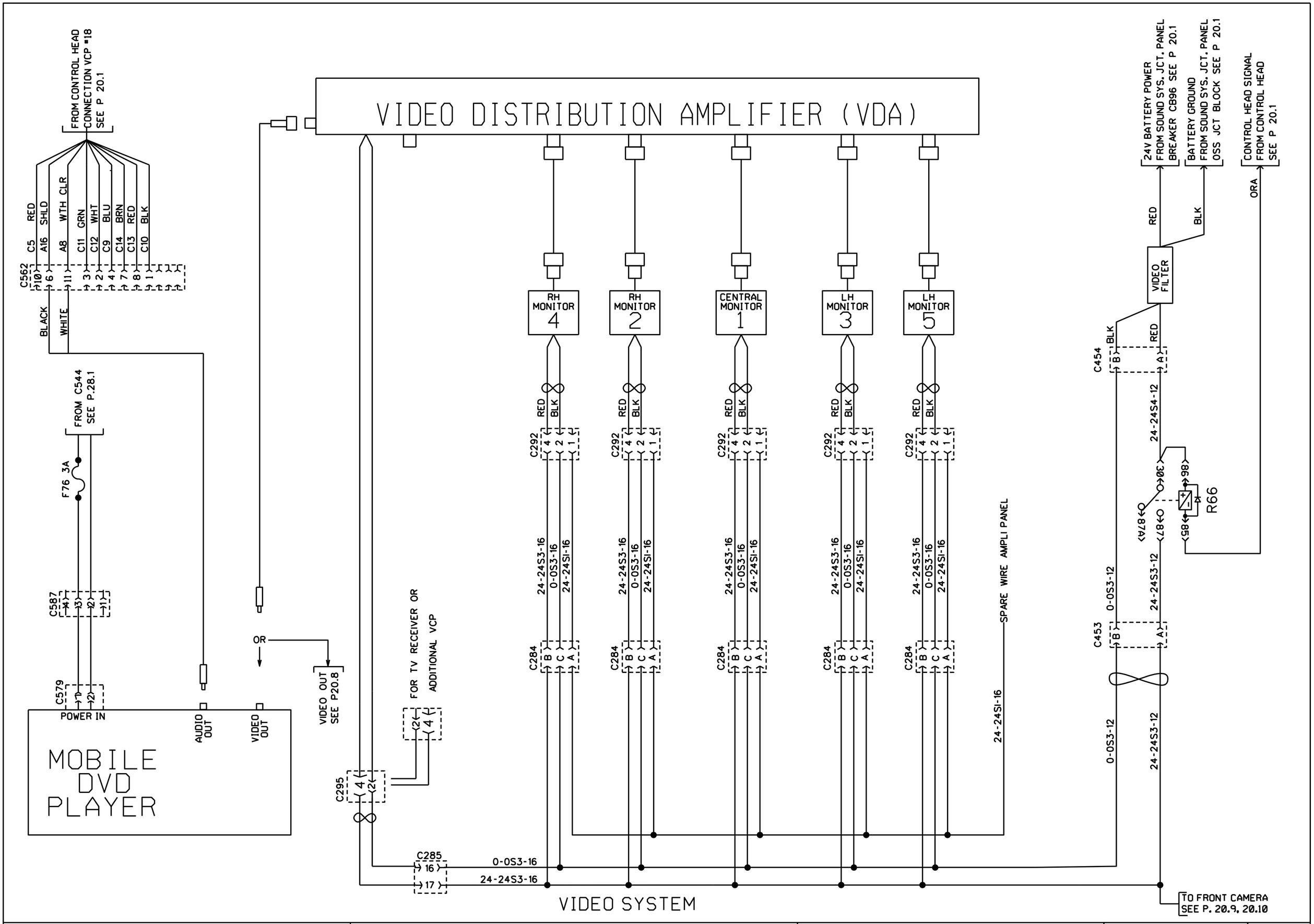

PREVOST	WIRING DIAGRAM	NO: D060976	PAGE: 20.3SP3	REVISION 00

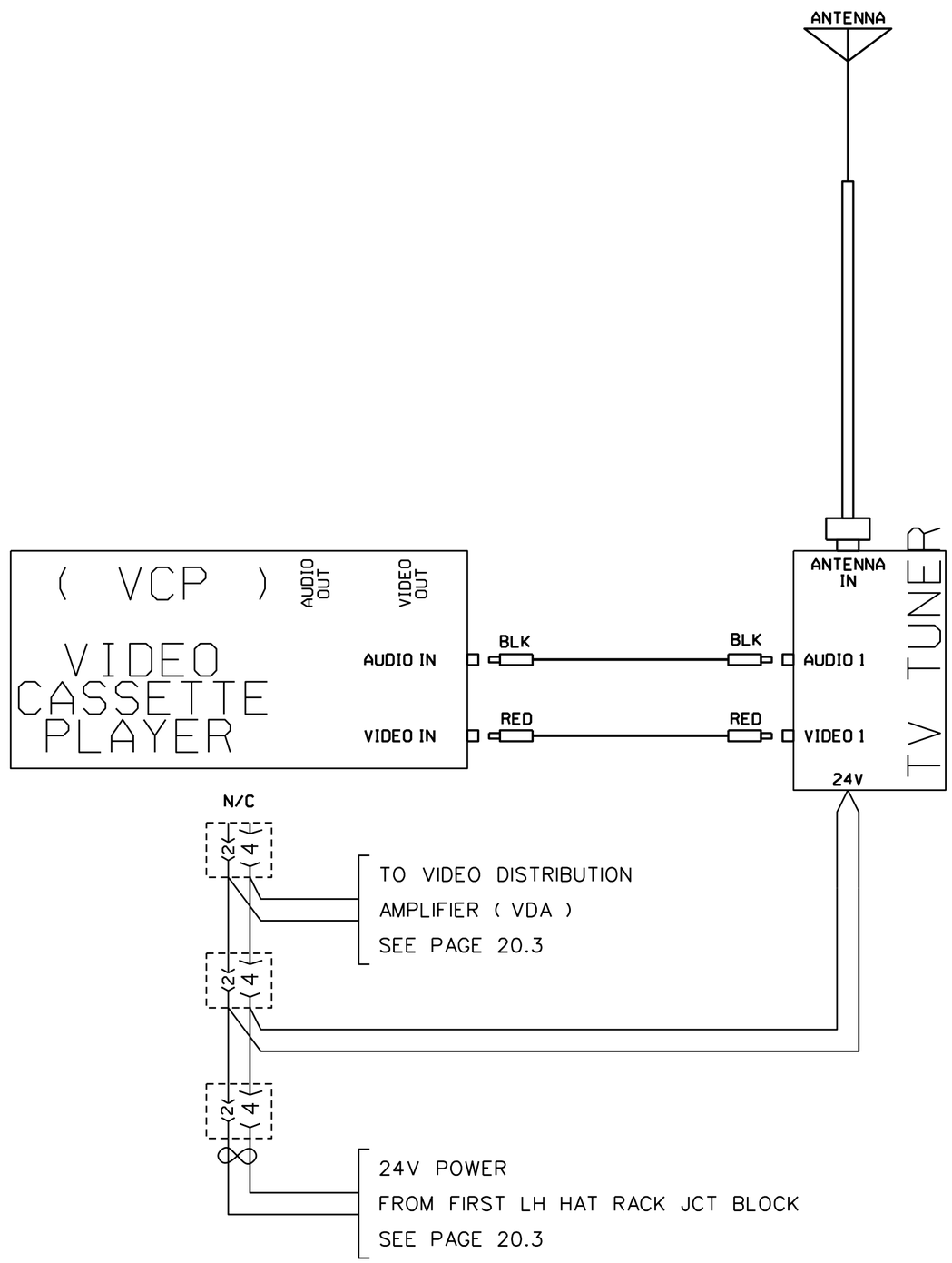
ANTENNA
(VCP)
AUDIO OUT
VIDEO OUT
VIDEO CASSETTE PLAYER
AUDIO IN
VIDEO IN
BLK
BLK
RED
RED
ANTENNA IN
AUDIO 1
VIDEO 1
24V
TV TUNER
N/C
2
4
TO VIDEO DISTRIBUTION
AMPLIFIER (VDA)
SEE PAGE 20.3
24V POWER
FROM FIRST LH HAT RACK JCT BLOCK
SEE PAGE 20.3

TV RECEIVER

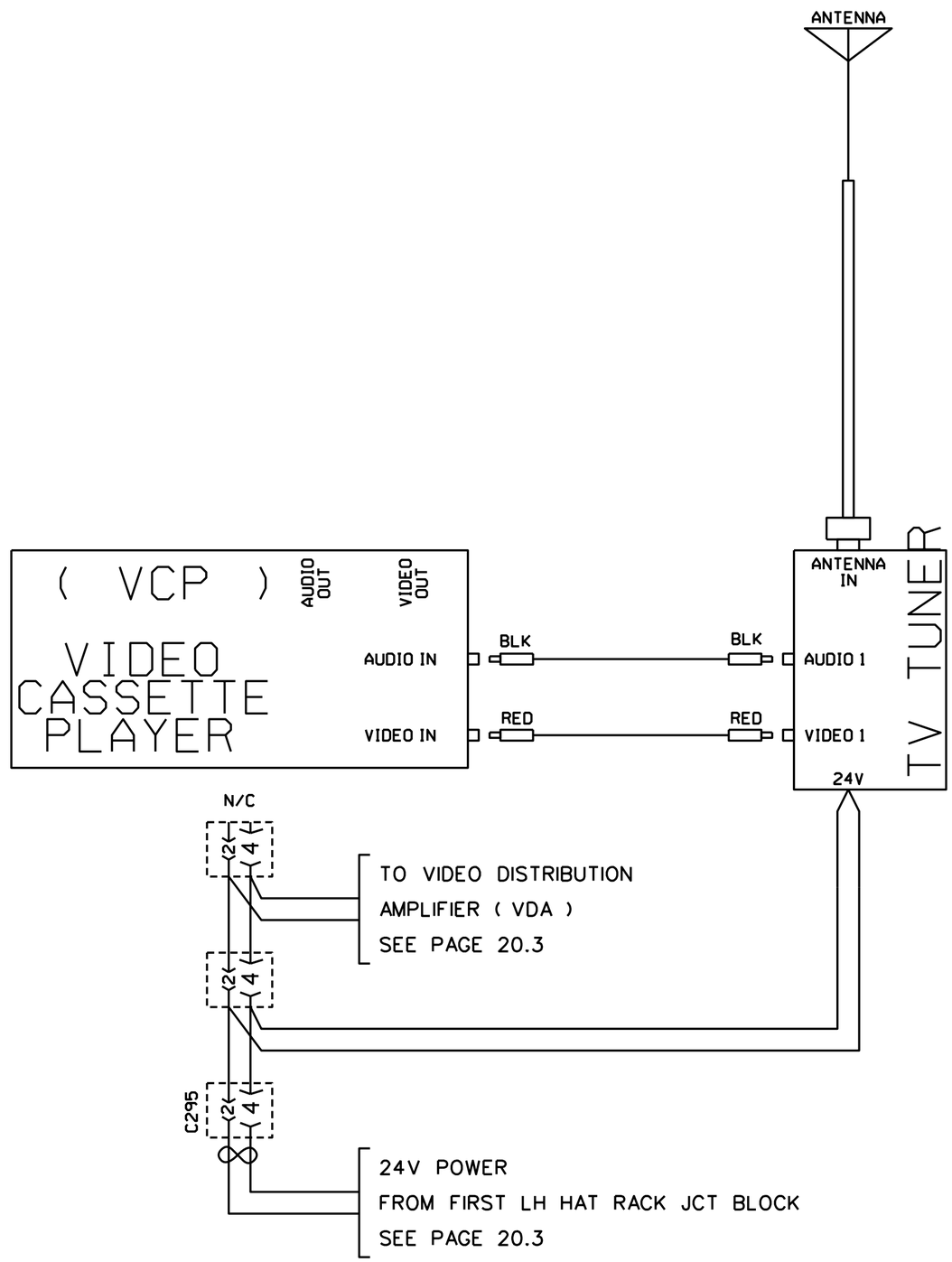
ANTENNA
(VCP)
AUDIO OUT
VIDEO OUT
VIDEO CASSETTE PLAYER
AUDIO IN
VIDEO IN
BLK
BLK
RED
RED
ANTENNA IN
AUDIO 1
VIDEO 1
24V
TV TUNER
N/C
2
4
TO VIDEO DISTRIBUTION
AMPLIFIER (VDA)
SEE PAGE 20.3
C295
24V POWER
FROM FIRST LH HAT RACK JCT BLOCK
SEE PAGE 20.3

TV RECEIVER

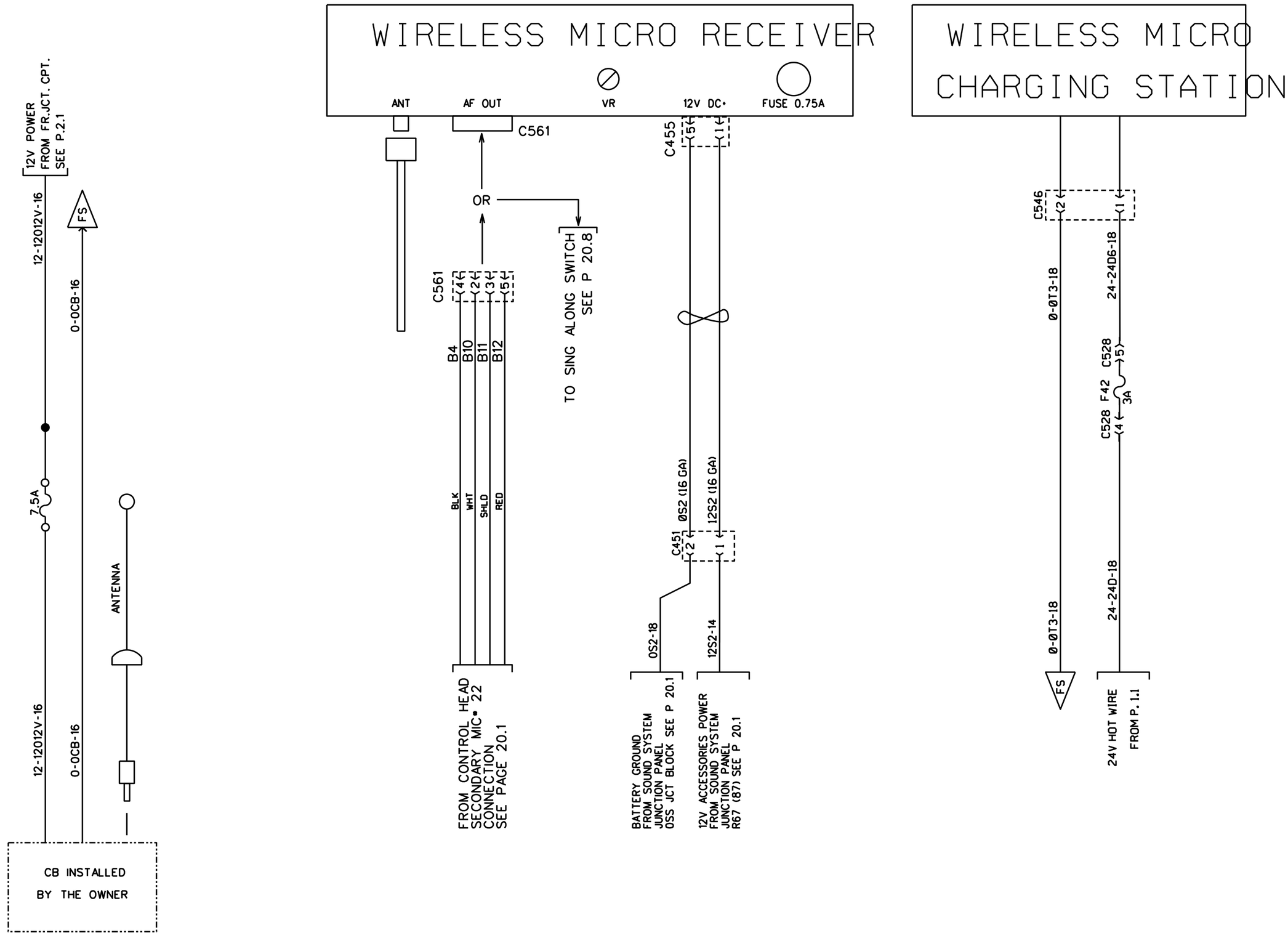

CB OPTION

WIRELESS MICROPHONE

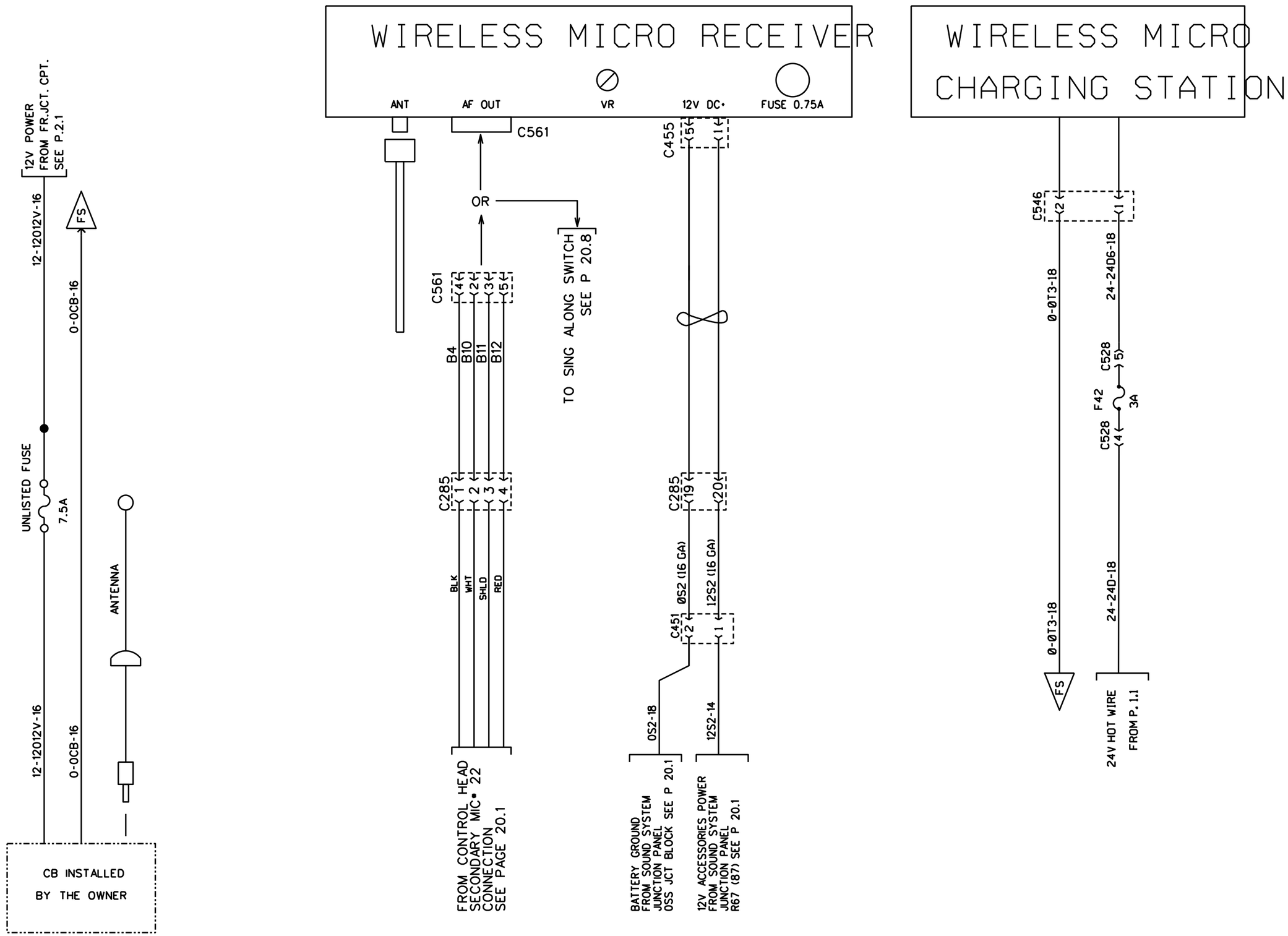

CB OPTION

WIRELESS MICROPHONE

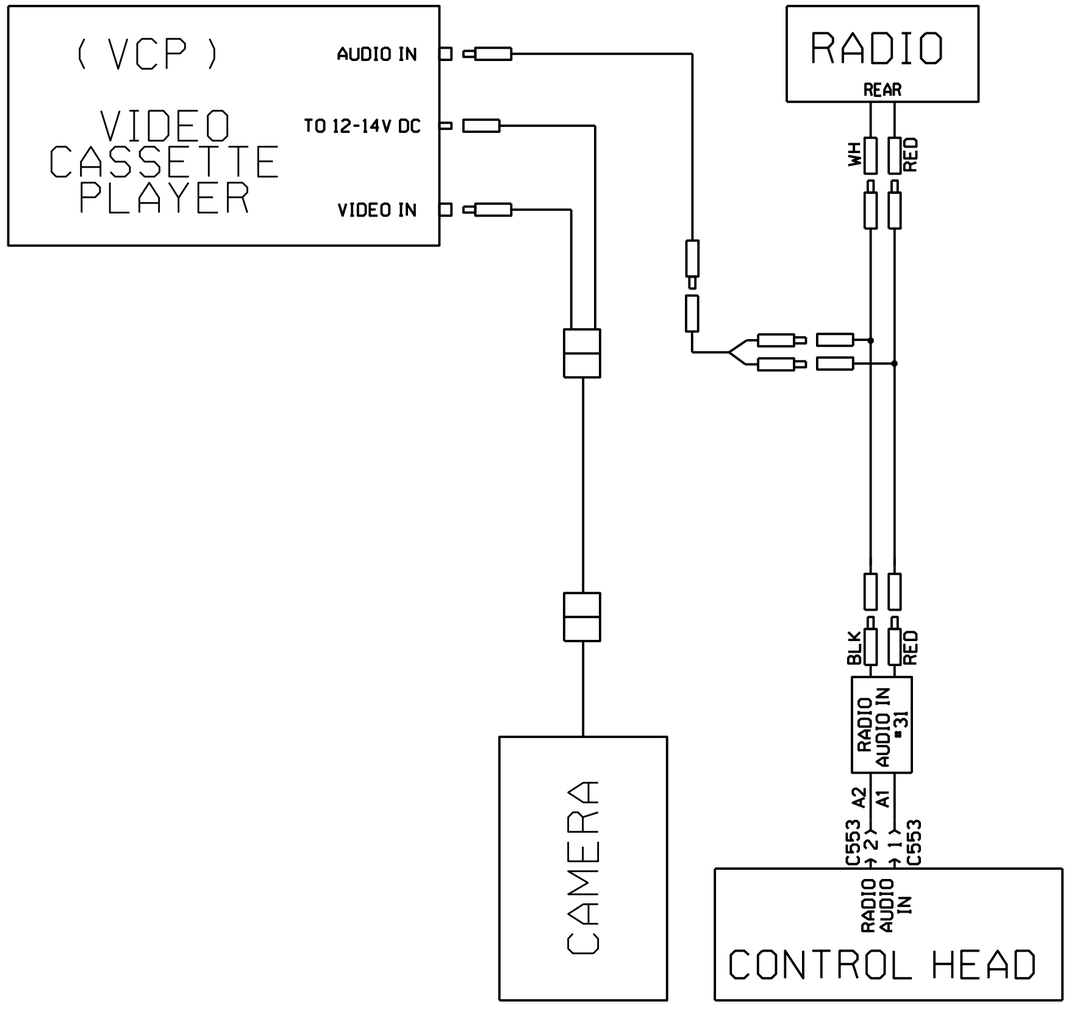

FRONT CAMERA WITHOUT TV RECEIVER

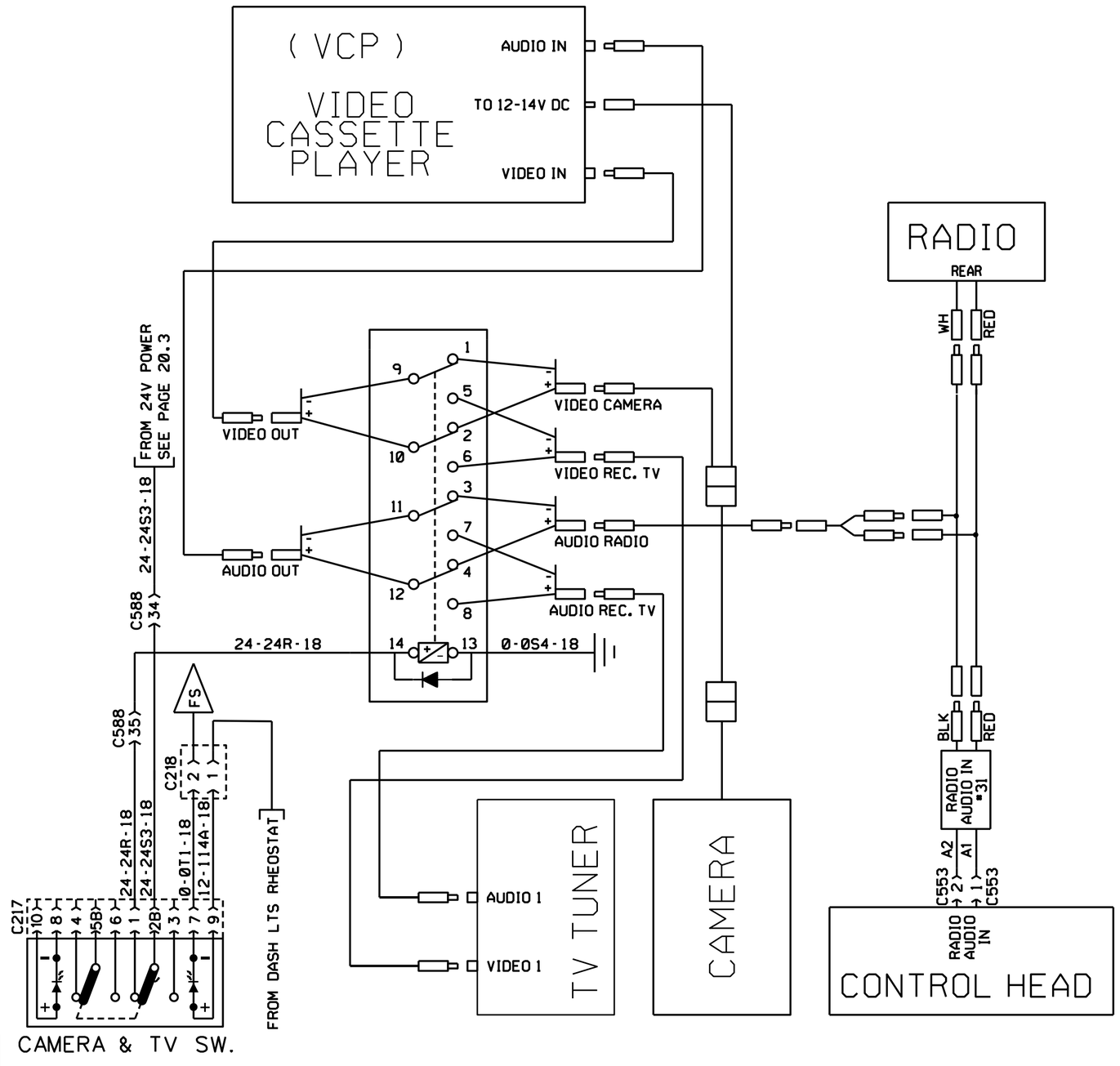

FRONT CAMERA WITH TV RECEIVER

PREVOST	WIRING DIAGRAM	NO: D060976	PAGE: 20.6	REVISION 00

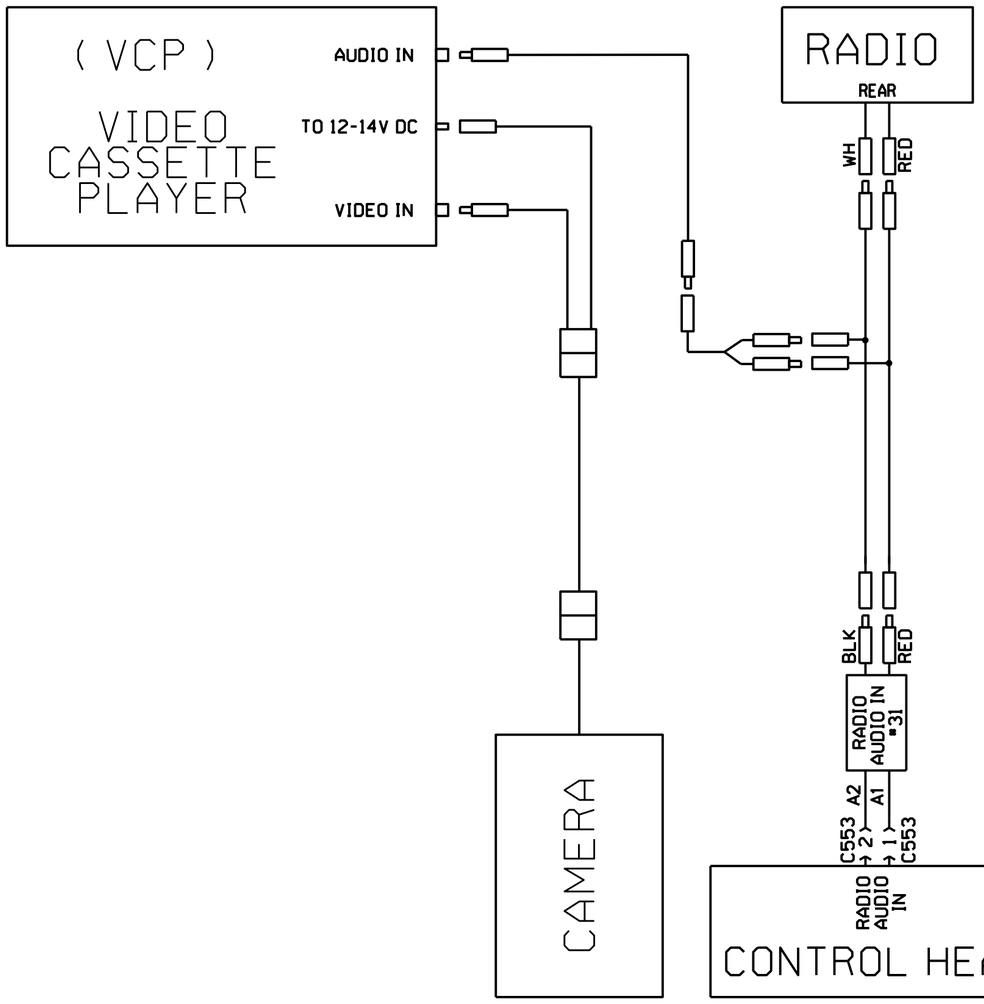

FRONT CAMERA WITHOUT TV RECEIVER

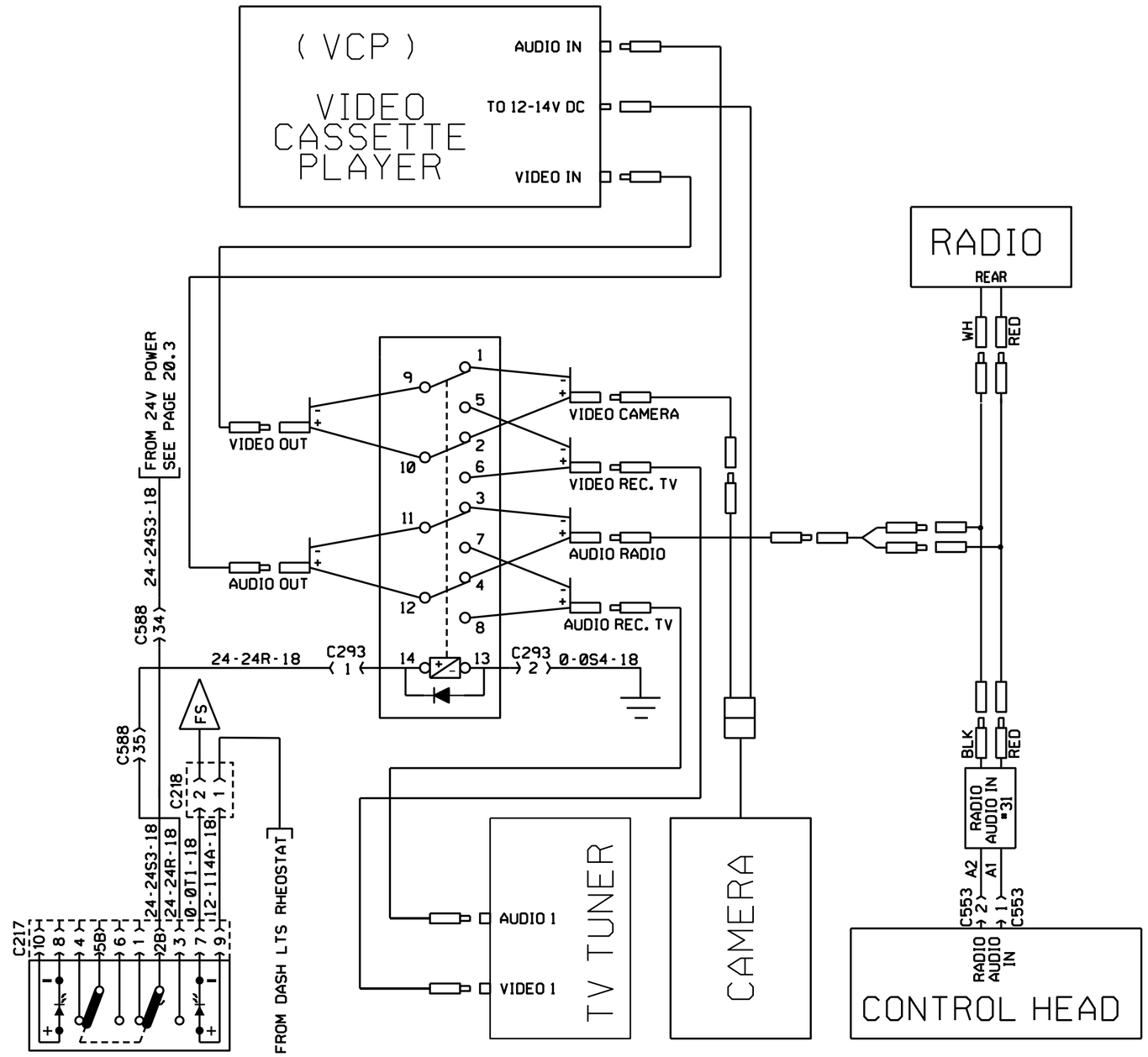

VCP, FRONT CAMERA WITH TV RECEIVER

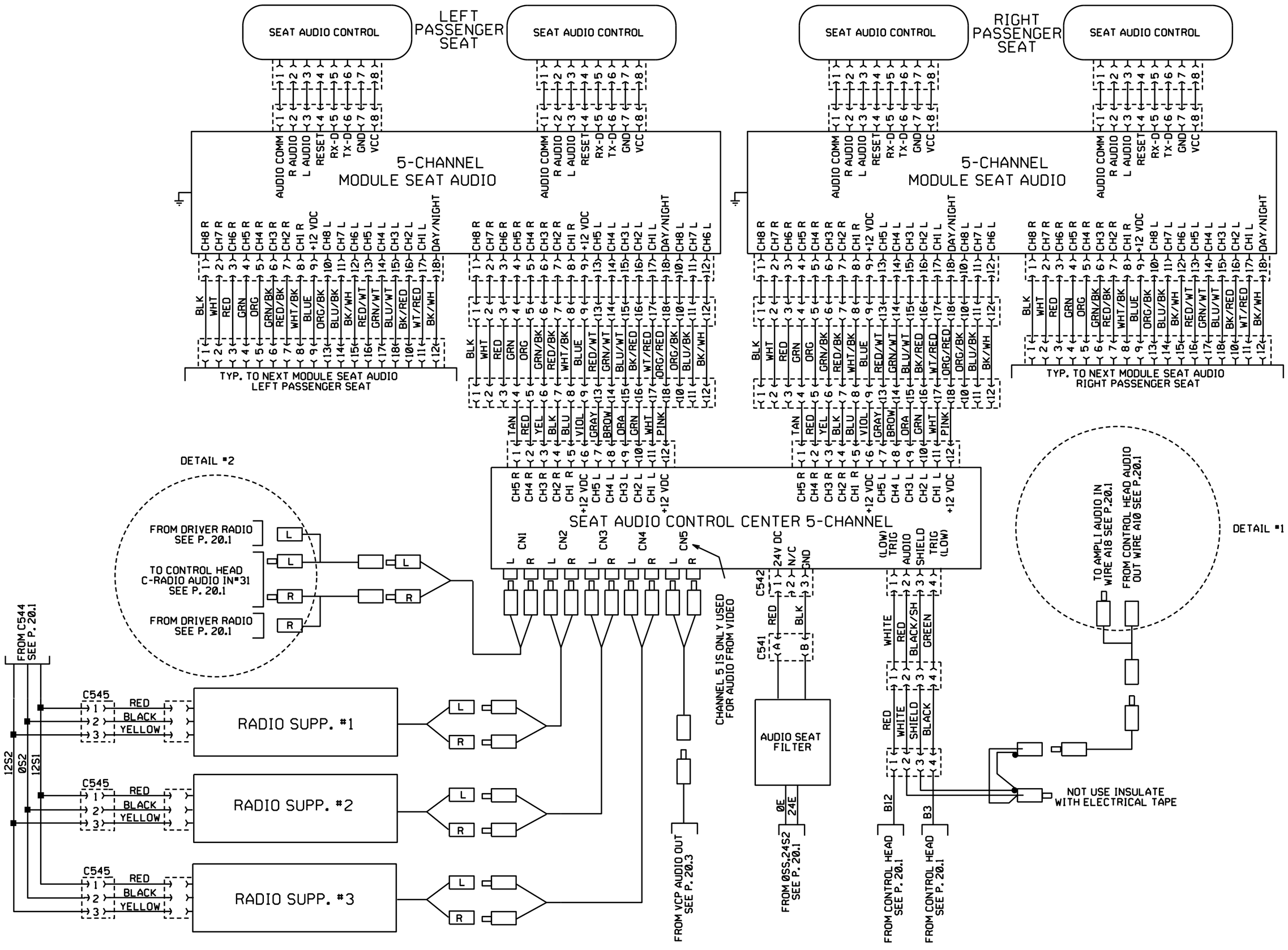

5-CHANNEL SLIM-LINE SEAT AUDIO SYSTEM

PREVOST	WIRING DIAGRAM	NO: D060976	PAGE: 20.7	REVISION 00

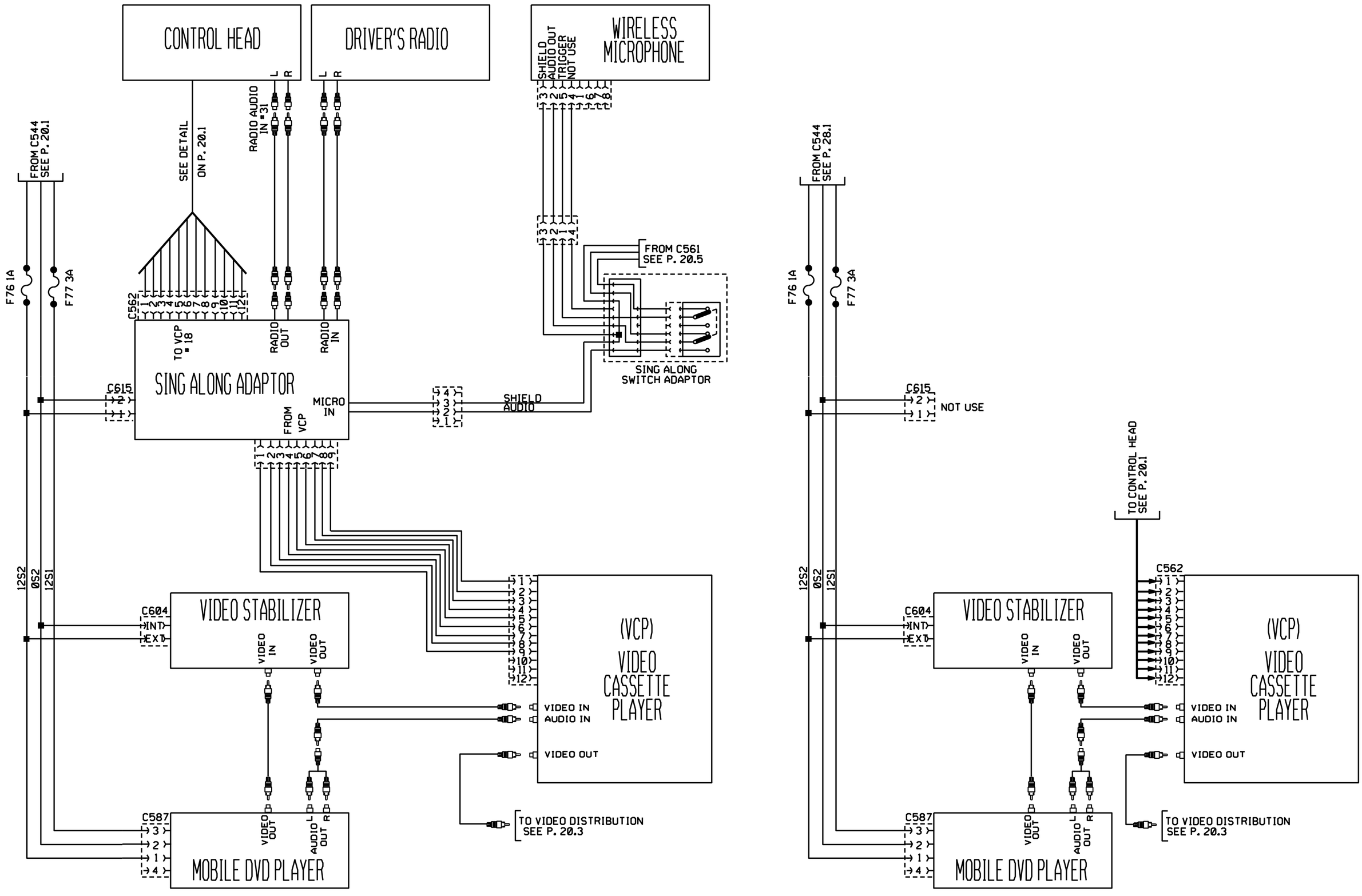

VCP AND DVD WITH KARAOKE

VCP AND DVD

PREVOST	WIRING DIAGRAM	NO: D060976	PAGE: 20.8	REVISION 00

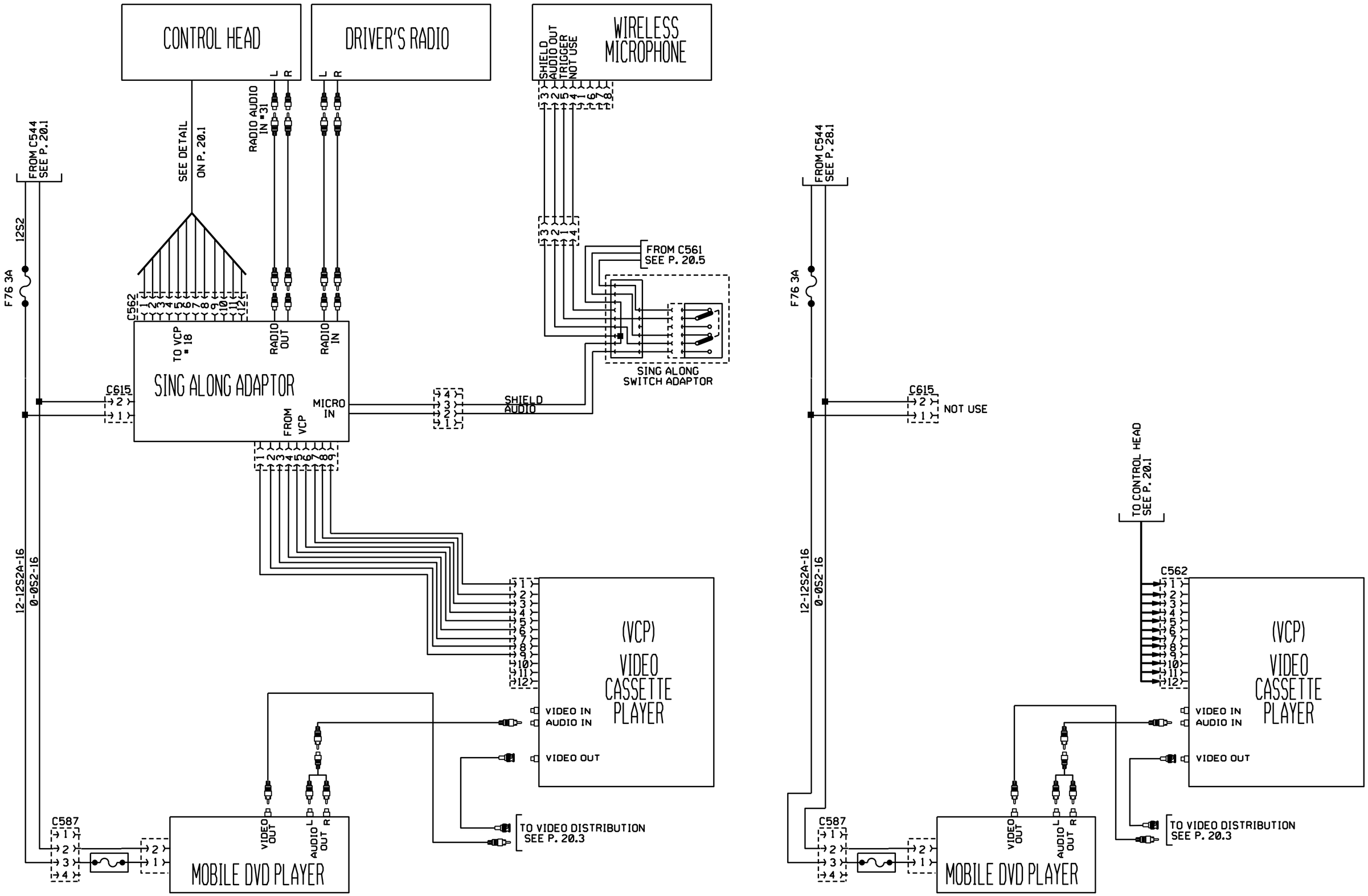

VCP AND DVD WITH KARAOKE

VCP AND DVD

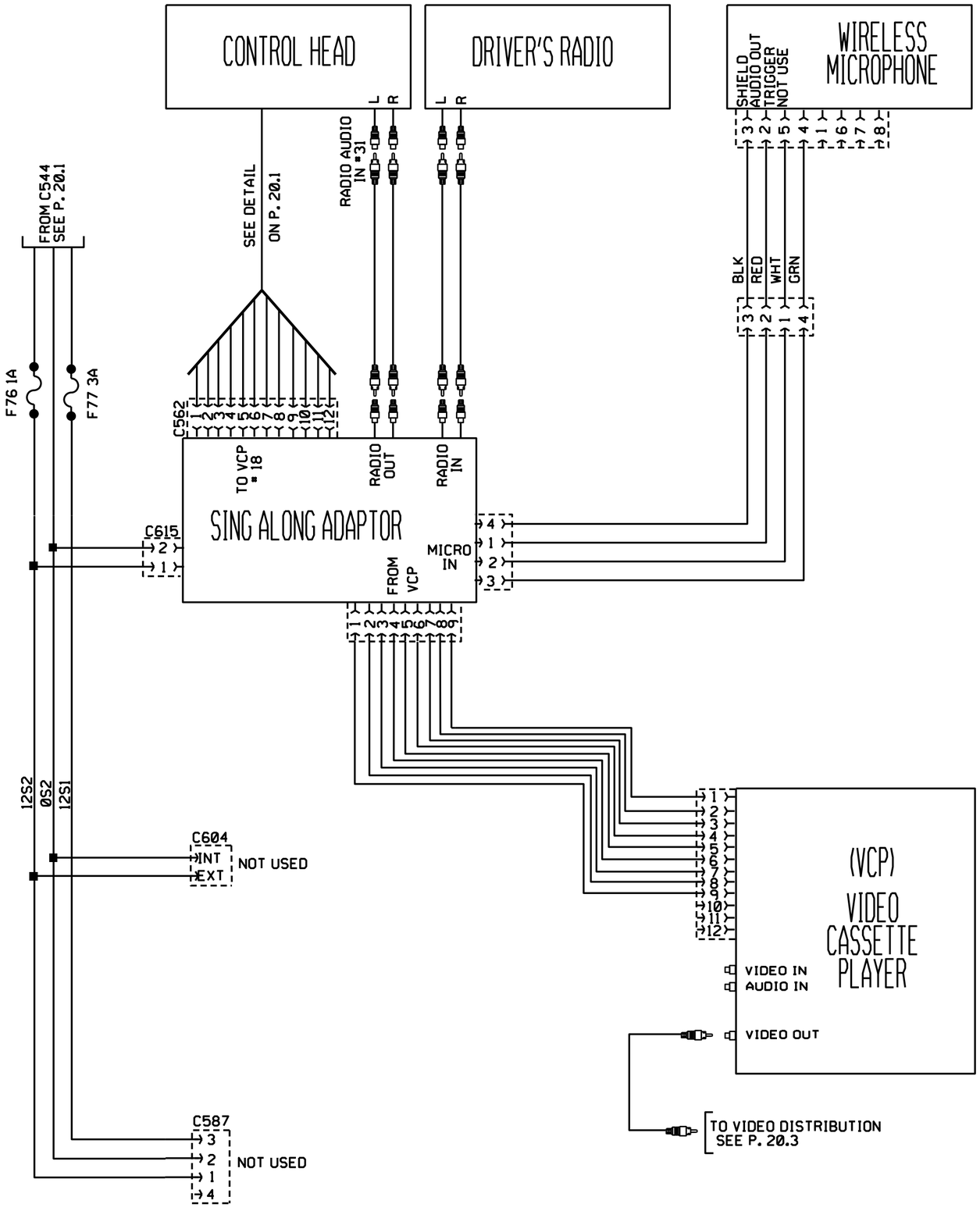

VCP AND SING ALONG ADAPTOR

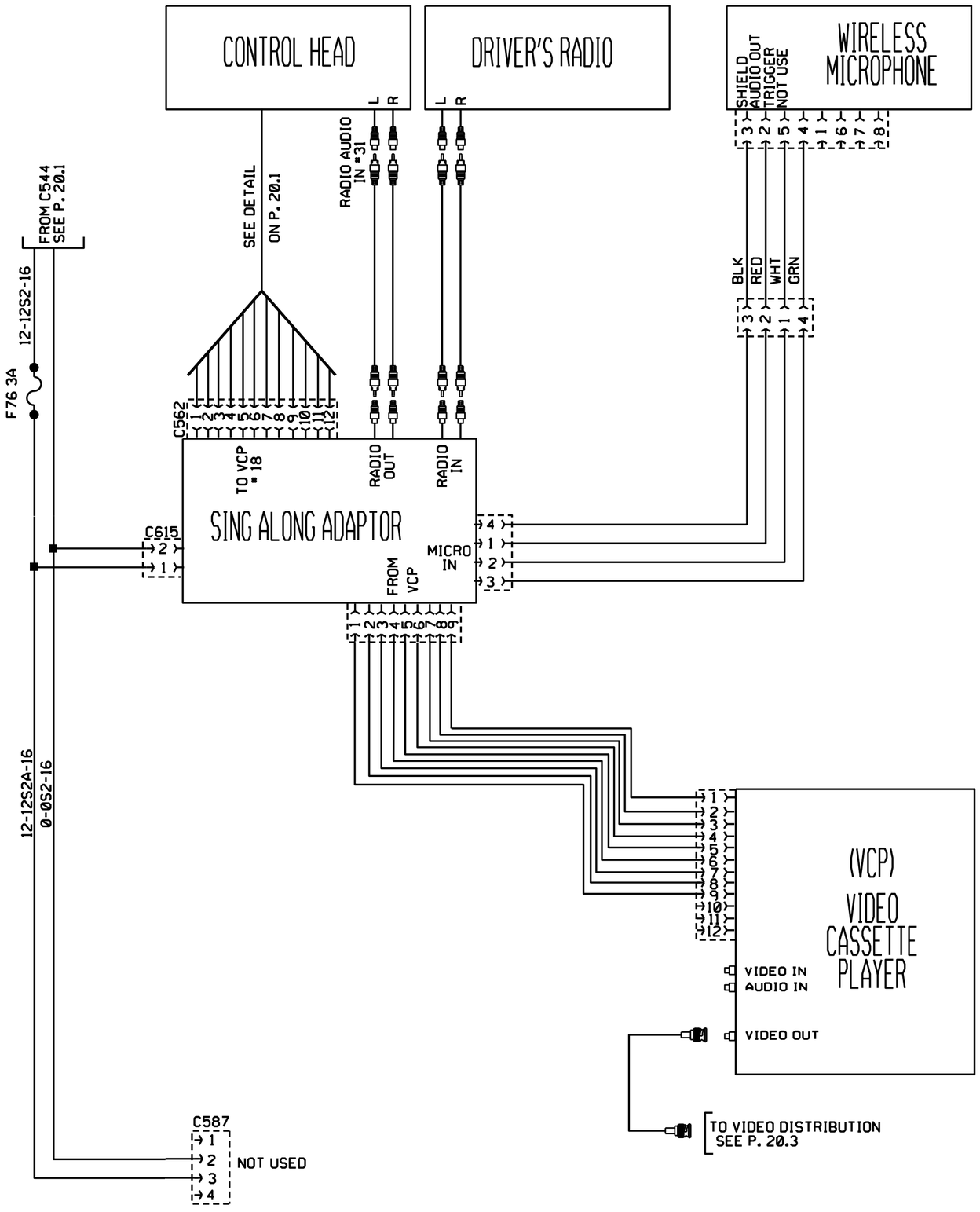

VCP AND SING ALONG ADAPTOR

PREVOST	WIRING DIAGRAM	NO: D060976	PAGE: 20.8sp1	REVISION 05

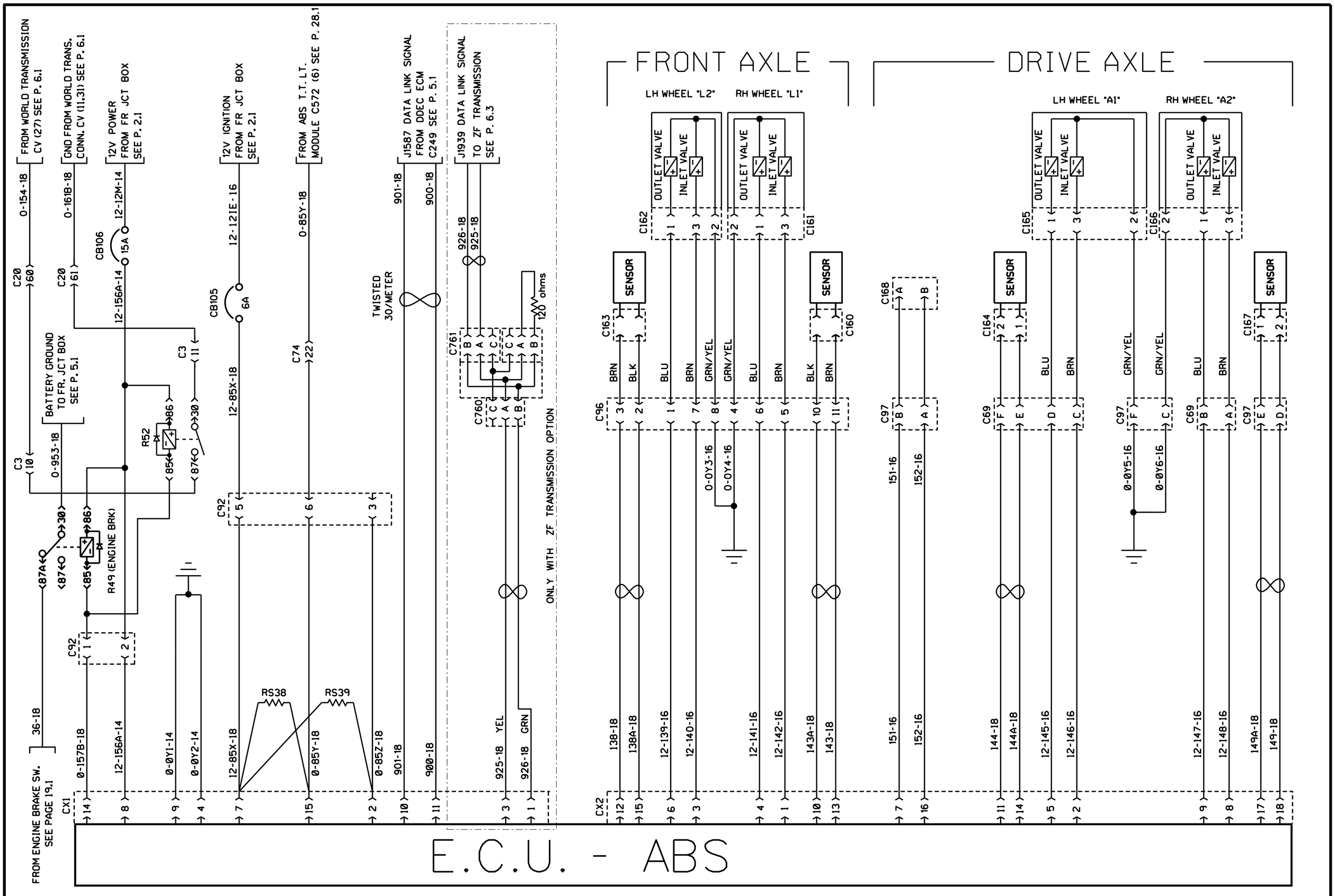

PREVOST	WIRING DIAGRAM	NO: D060976	PAGE: 21.1	REVISION 00

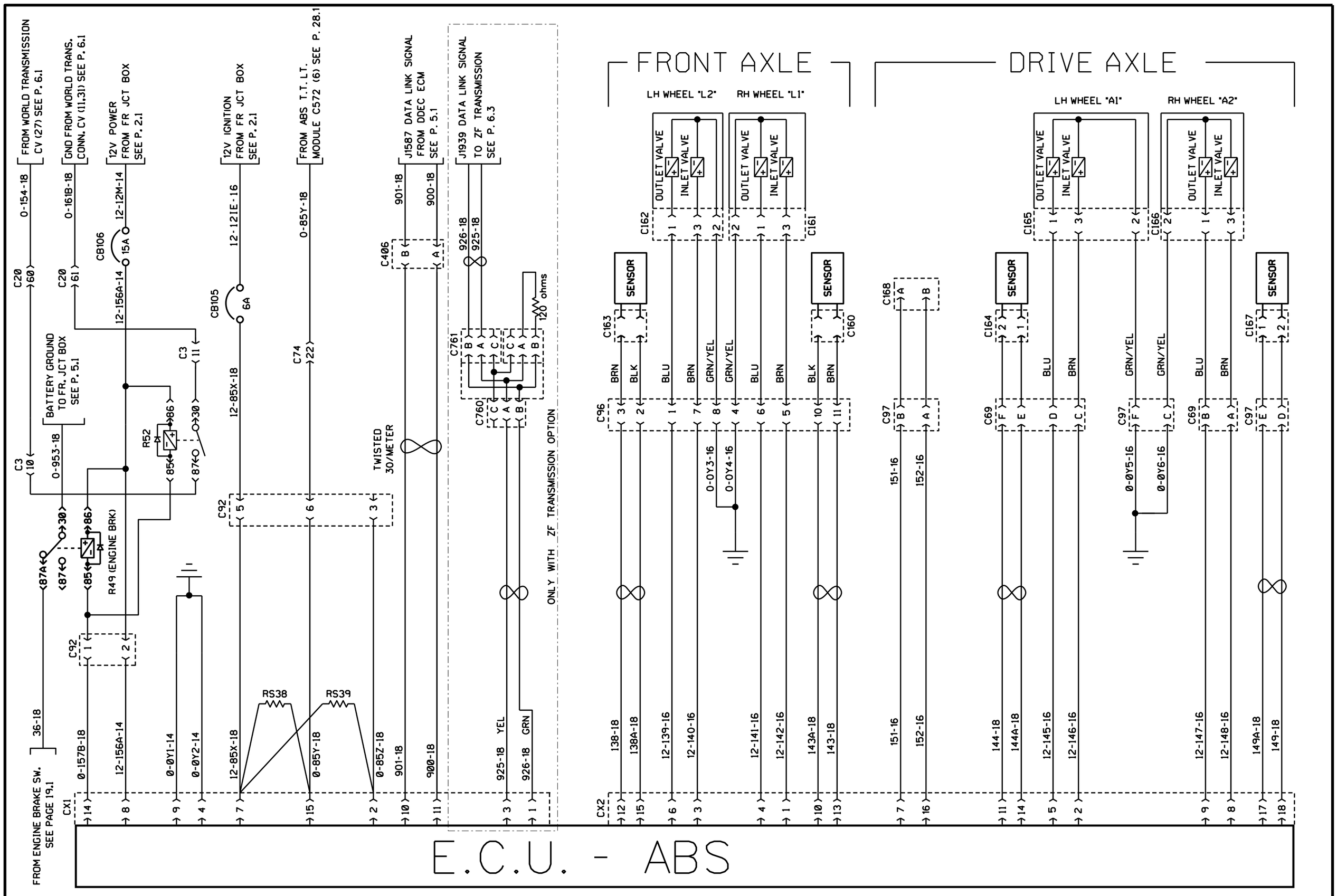

PREVOST	WIRING DIAGRAM	NO: D060976	PAGE: 21.1	REVISION 08

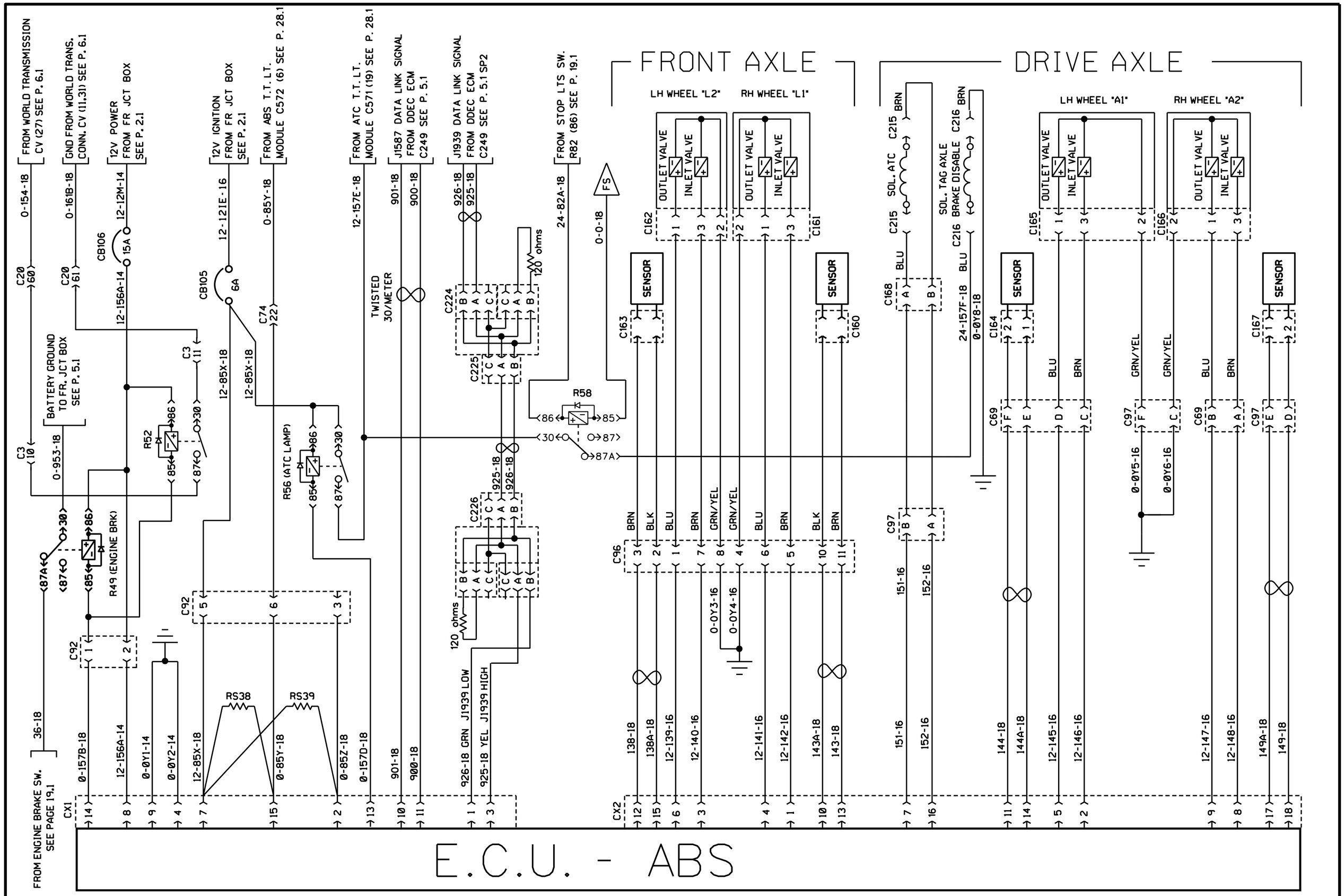

PREVOST	WIRING DIAGRAM	NO: D060976	PAGE: 21.1 SP1	REVISION 00

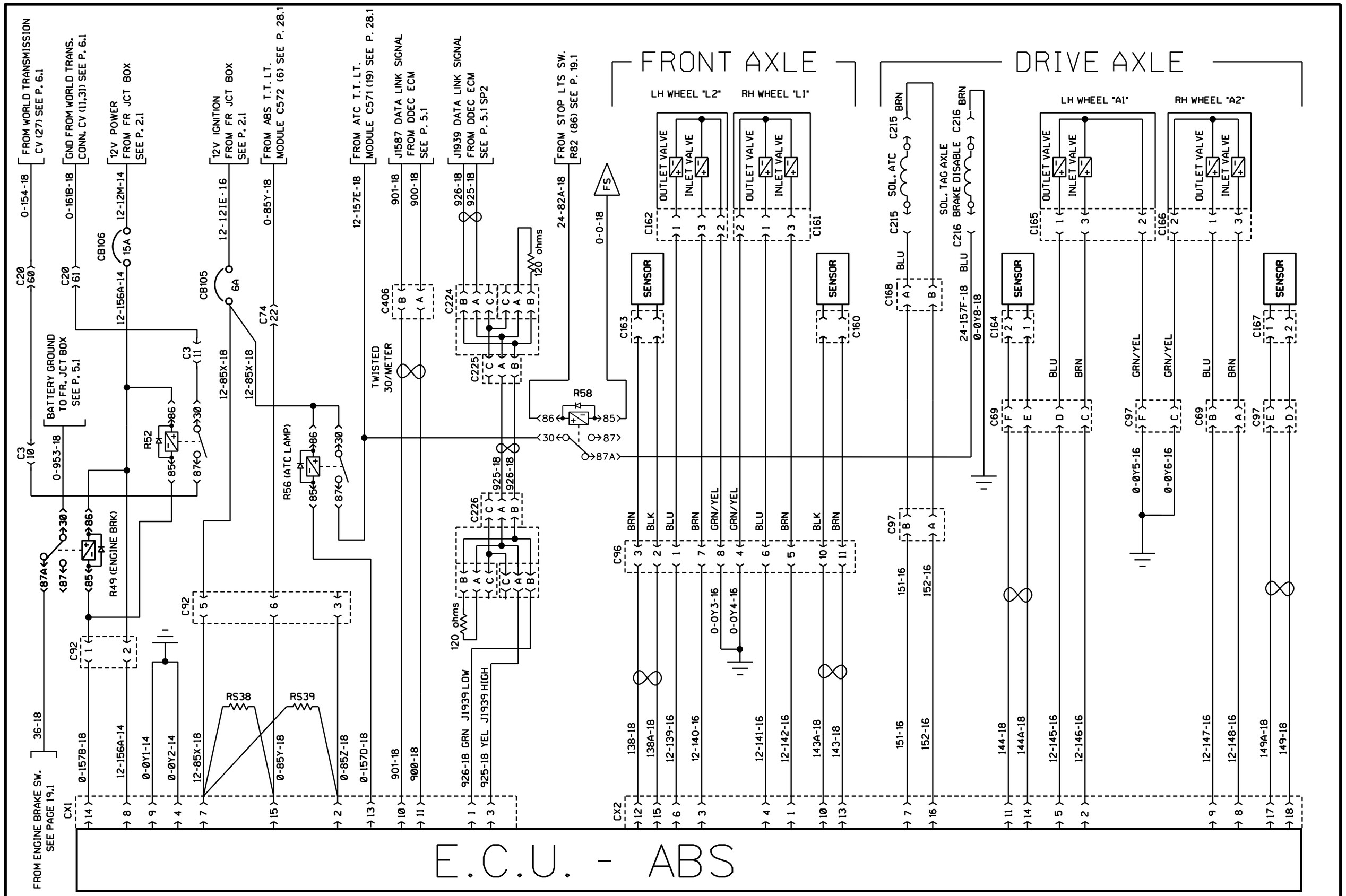
FROM WORLD TRANSMISSION CV (27) SEE P. 6.1
GND FROM WORLD TRANS. CONN. CV (11,31) SEE P. 6.1
12V POWER FROM FR JCT BOX SEE P. 2.1
12V IGNITION FROM FR JCT BOX SEE P. 2.1
FROM ABS T.T. LT. MODULE C572 (6) SEE P. 28.1
FROM ATC T.T. LT. MODULE C571 (19) SEE P. 28.1
J1587 DATA LINK SIGNAL FROM DDEC ECM SEE P. 5.1
J1939 DATA LINK SIGNAL FROM DDEC ECM SEE P. 5.1 SP2
FROM STOP LTS SW. R82 (86) SEE P. 19.1
FRONT AXLE
DRIVE AXLE
LH WHEEL "L2"
RH WHEEL "L1"
LH WHEEL "A1"
RH WHEEL "A2"
OUTLET VALVE
INLET VALVE
SENSOR
SOL. ATC
SOL. TAG AXLE BRAKE DISABLE
BATTERY GROUND TO FR. JCT BOX SEE P. 5.1
TWISTED 30/METER
R49 (ENGINE BRK)
R52
R56 (ATC LAMP)
R58
CB106
CB105
120 ohms
RS38
RS39
FROM ENGINE BRAKE SW. SEE PAGE 19.1
J1939 LOW
J1939 HIGH
E.C.U. - ABS

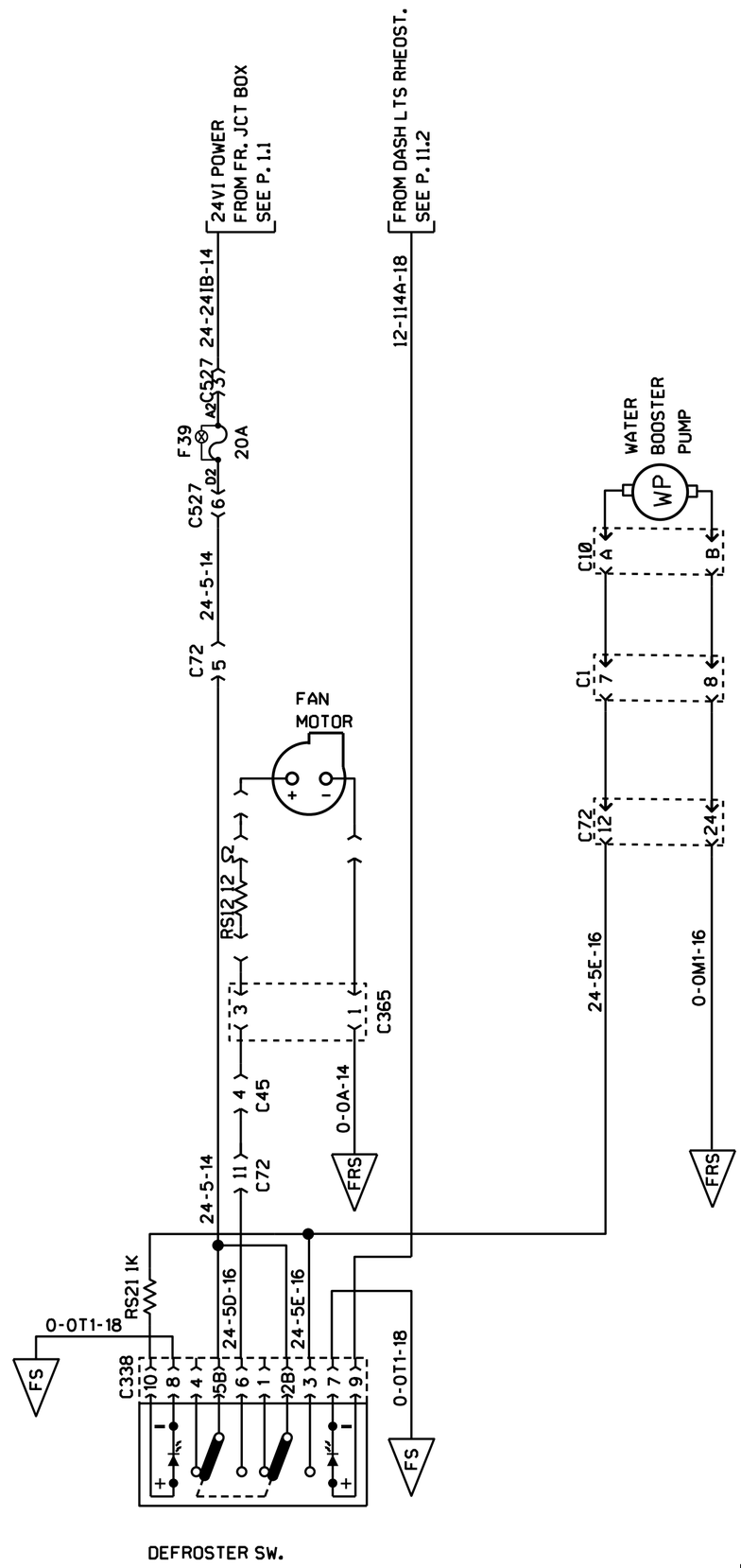

UPPER WINDSHIELD DEFROST

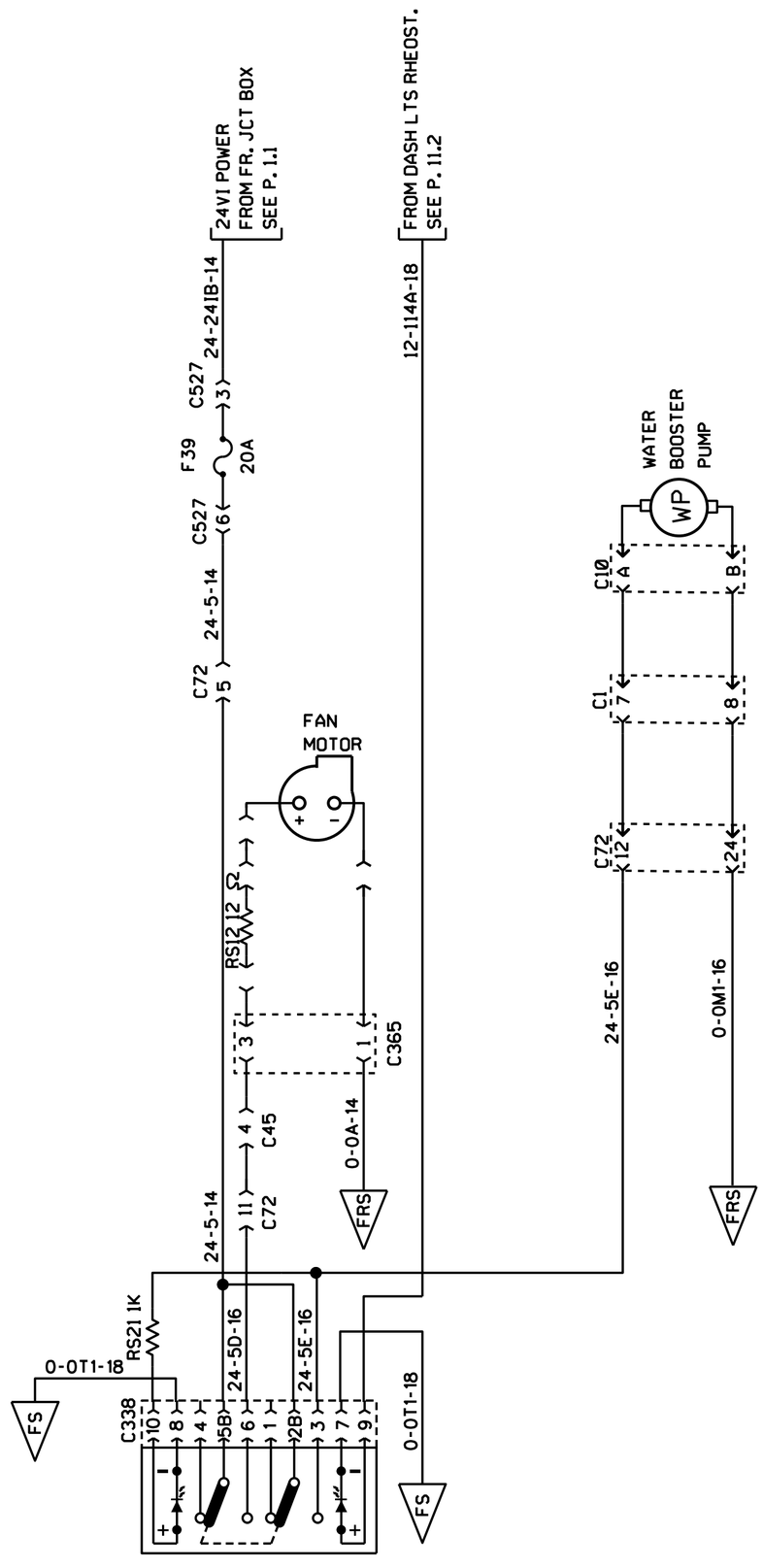

DEFROSTER SW.

UPPER WINDSHIELD DEFROST

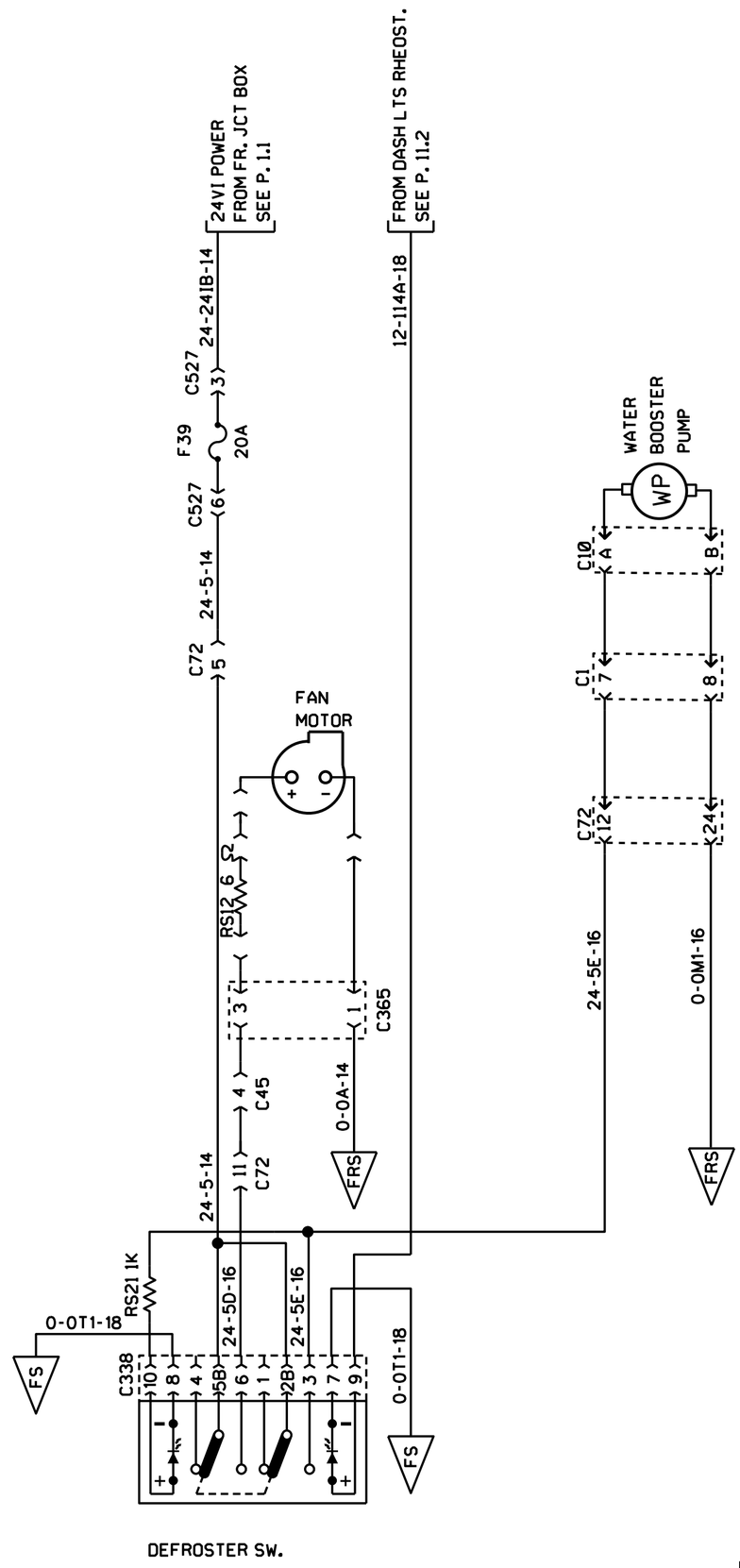

UPPER WINDSHIELD DEFROST

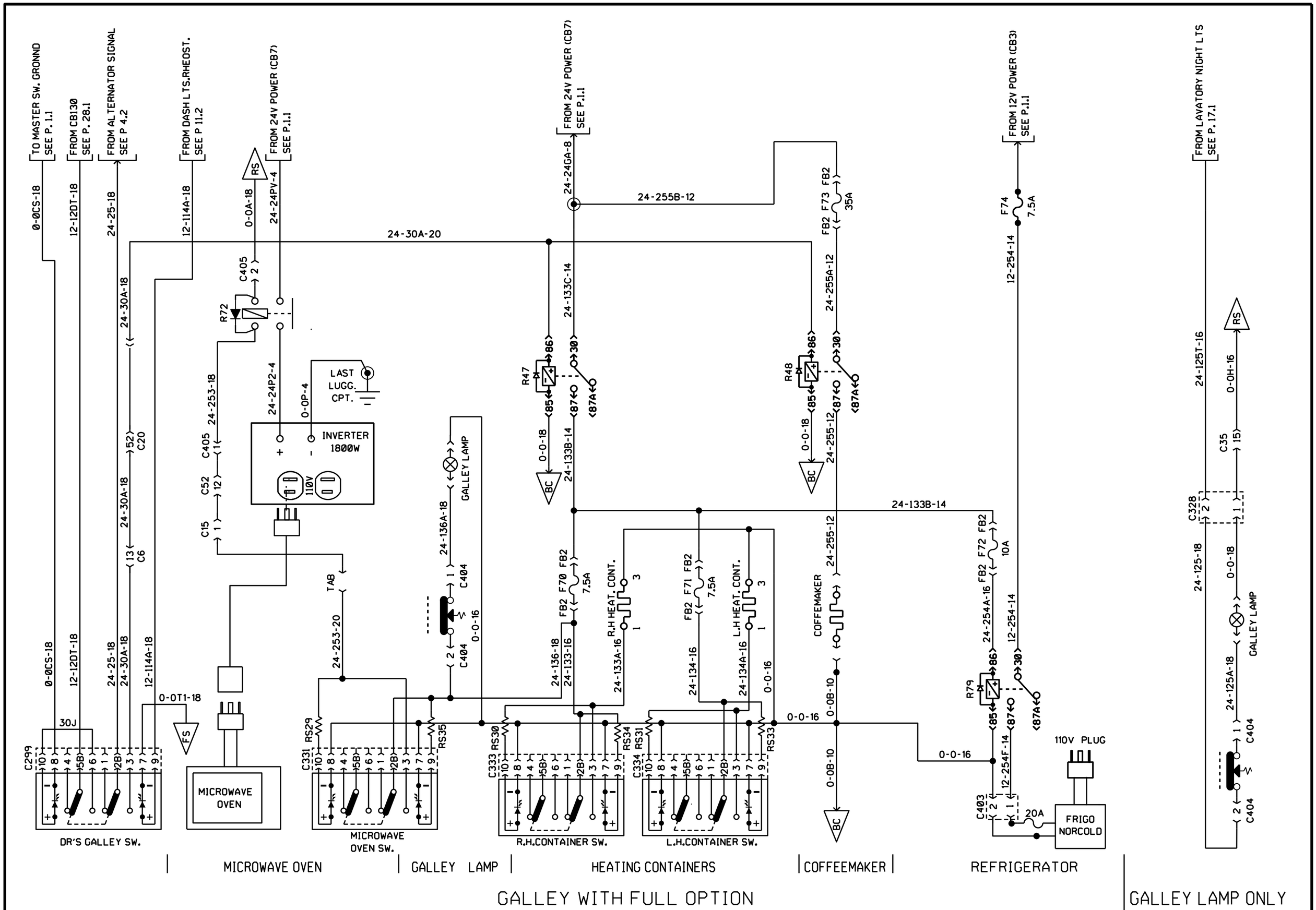

PREVOST	WIRING DIAGRAM	NO: D060976	PAGE: 23.1	REVISION 00

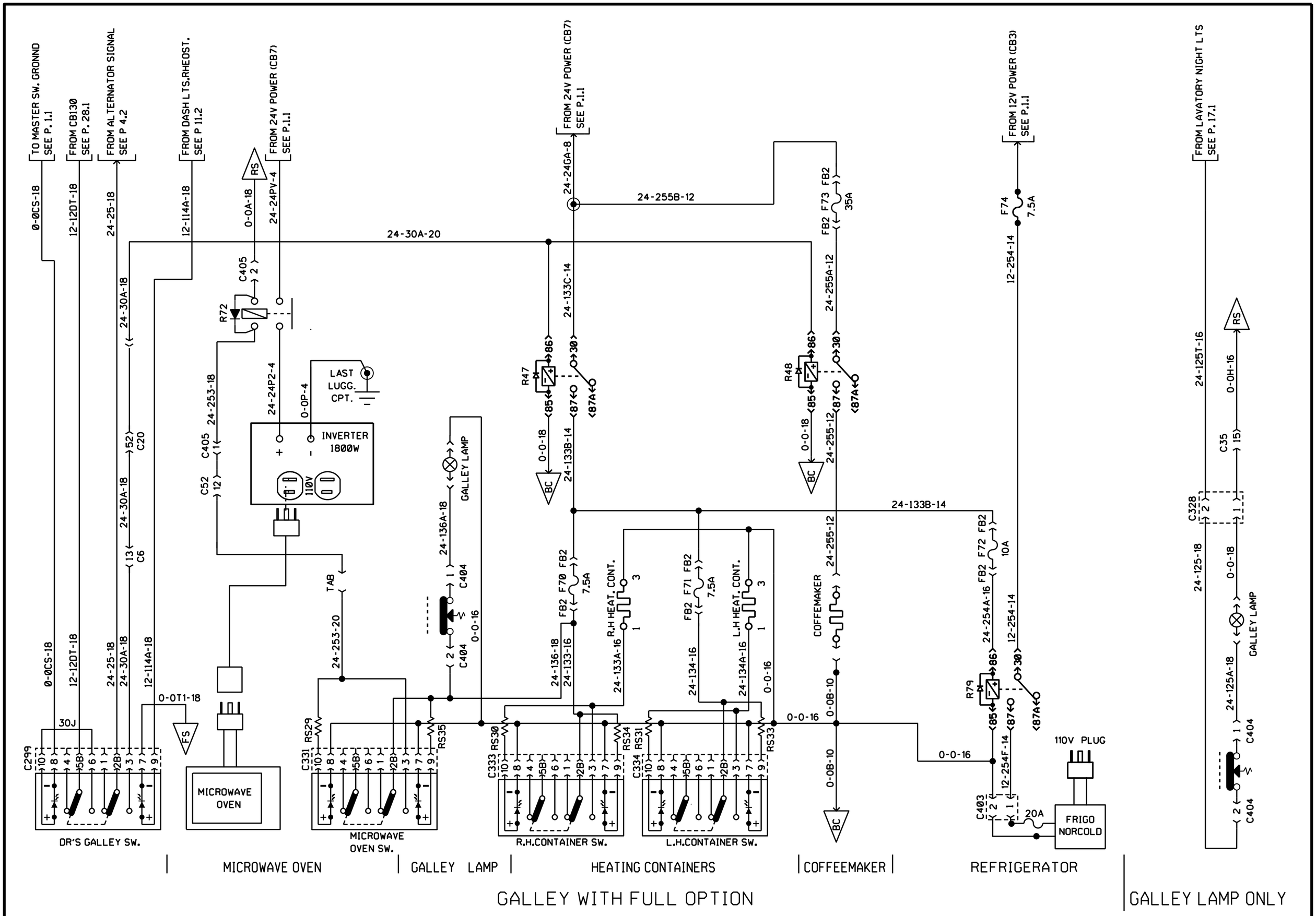

PREVOST	WIRING DIAGRAM	NO: D060976	PAGE: 23.1	REVISION 04

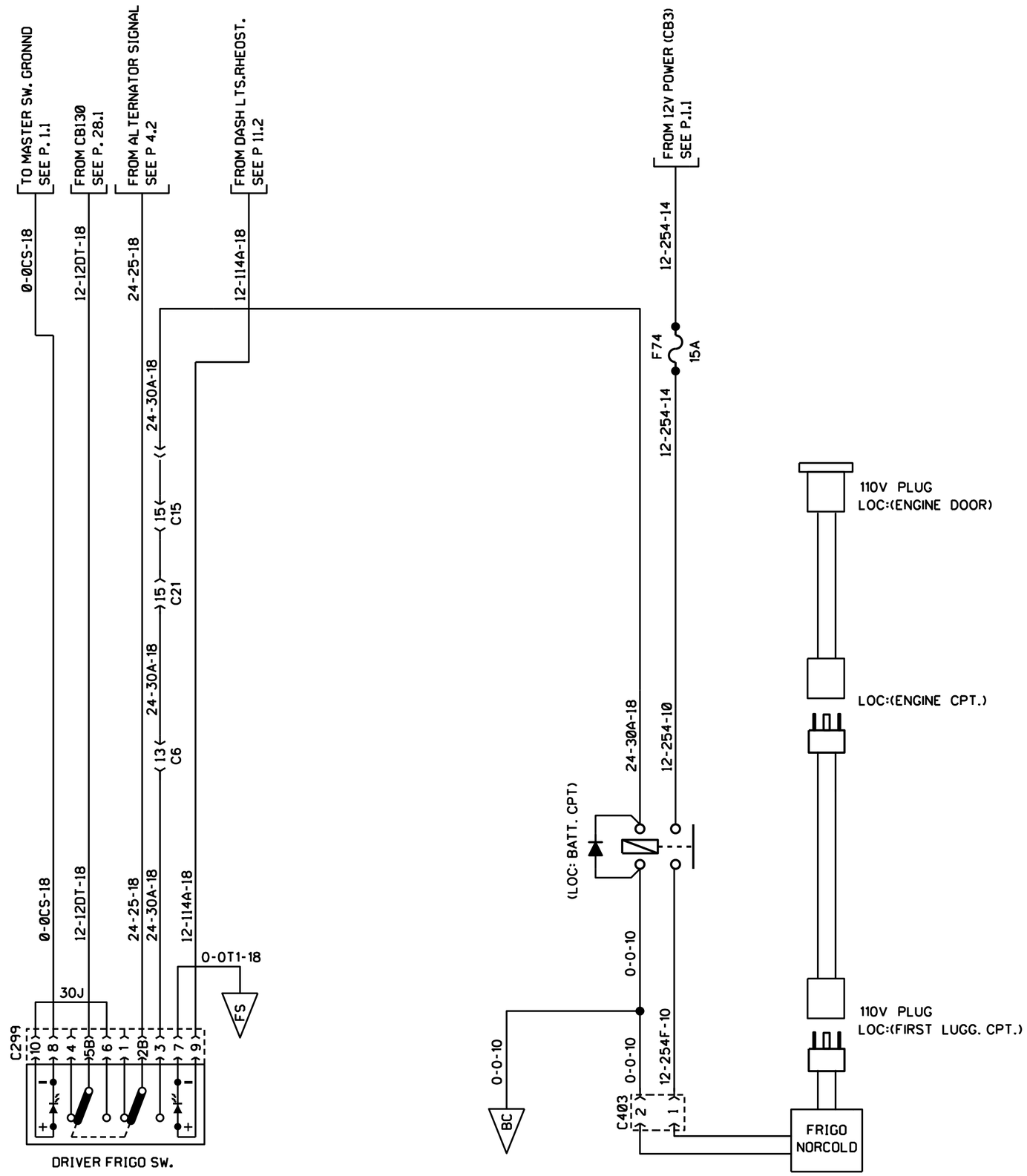

REFRIGERATOR FIRST LUGGAGE CPT.

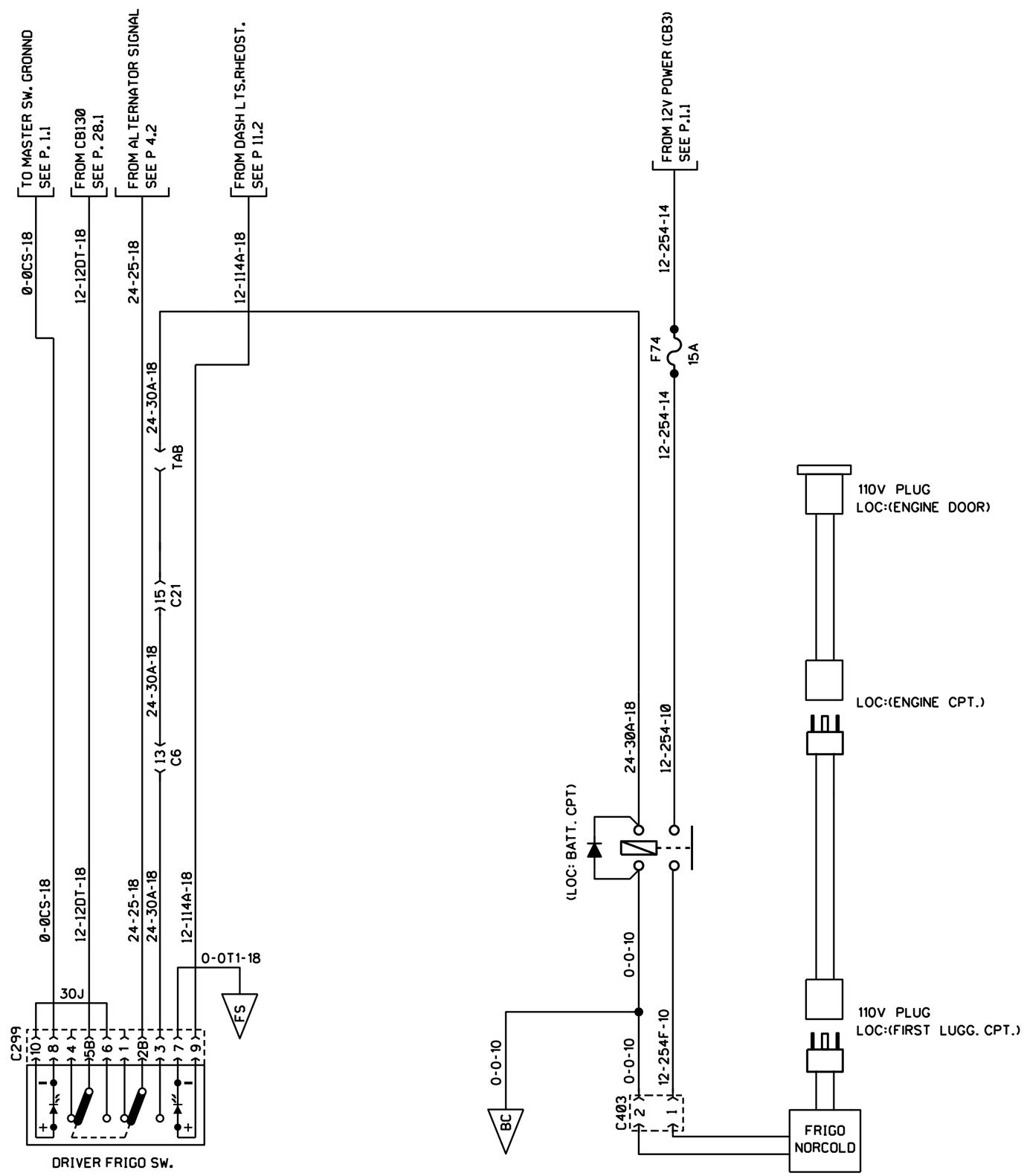

REFRIGERATOR FIRST LUGGAGE CPT.

SANS RELAIS

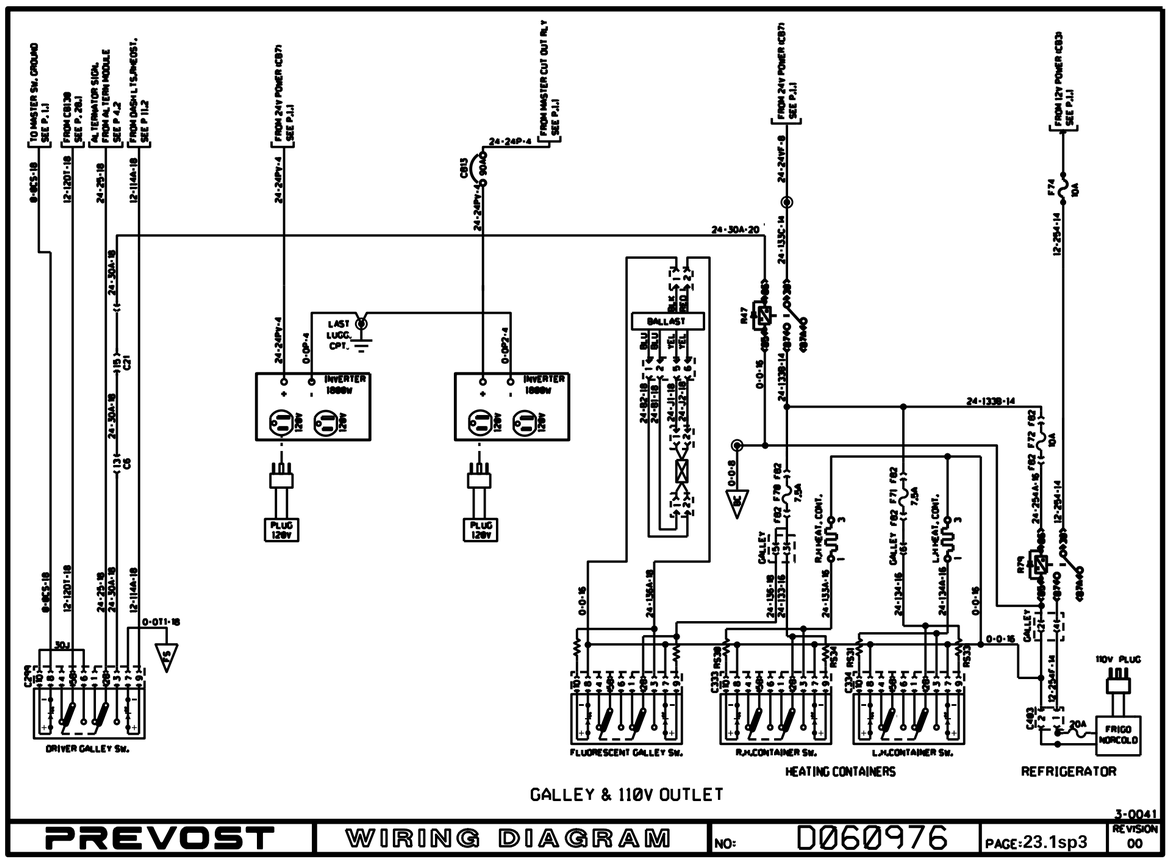

AVEC RELAIS

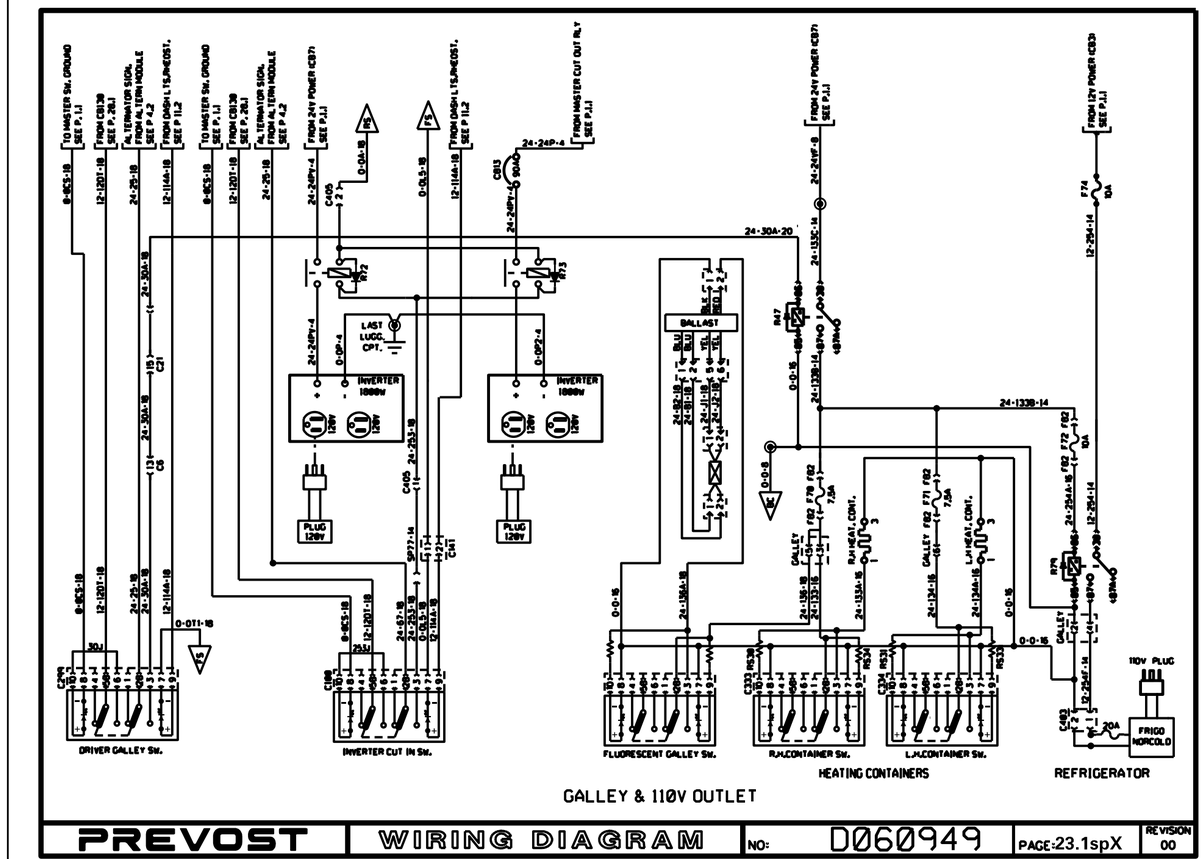

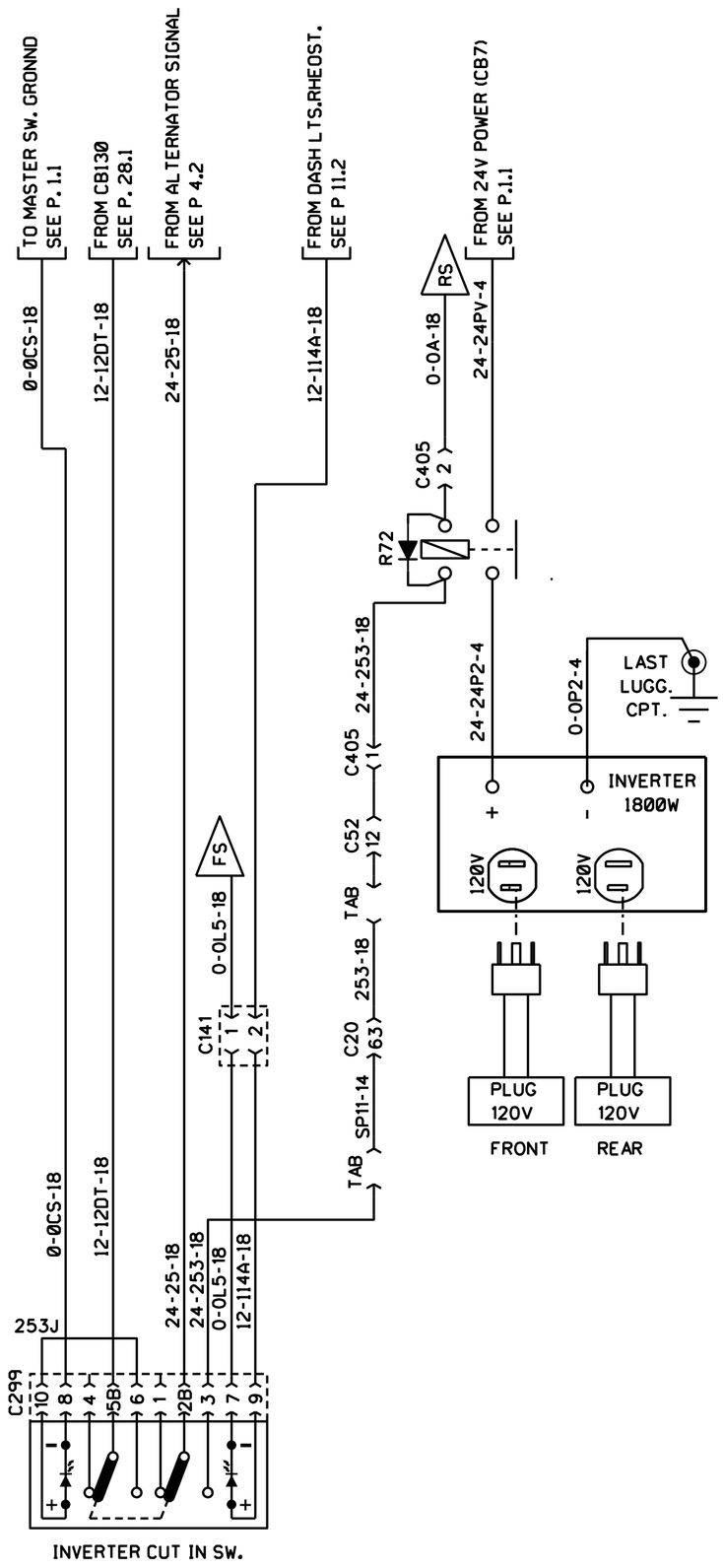
TO MASTER SW. GROUND
SEE P. 1.1
FROM CB130
SEE P. 28.1
FROM ALTERNATOR SIGNAL
SEE P 4.2
FROM DASH LTS.RHEOST.
SEE P 11.2
FROM 24V POWER (CB7)
SEE P.1.1
0-0CS-18
12-12DT-18
24-25-18
12-114A-18
0-0A-18
24-24PV-4
RS
C405
2
R72
24-253-18
C405
1
24-24P2-4
0-0P2-4
LAST
LUGG.
CPT.
INVERTER
1800W
+
-
120V
120V
C52
12
TAB
0-0L5-18
FS
253-18
C141
1
2
C20
63
SP11-14
TAB
PLUG
120V
PLUG
120V
FRONT
REAR
0-0CS-18
12-12DT-18
24-25-18
24-253-18
0-0L5-18
12-114A-18
253J
C299
10
8
4
5B
6
1
2B
3
7
9
INVERTER CUT IN SW.

120V OUTLET

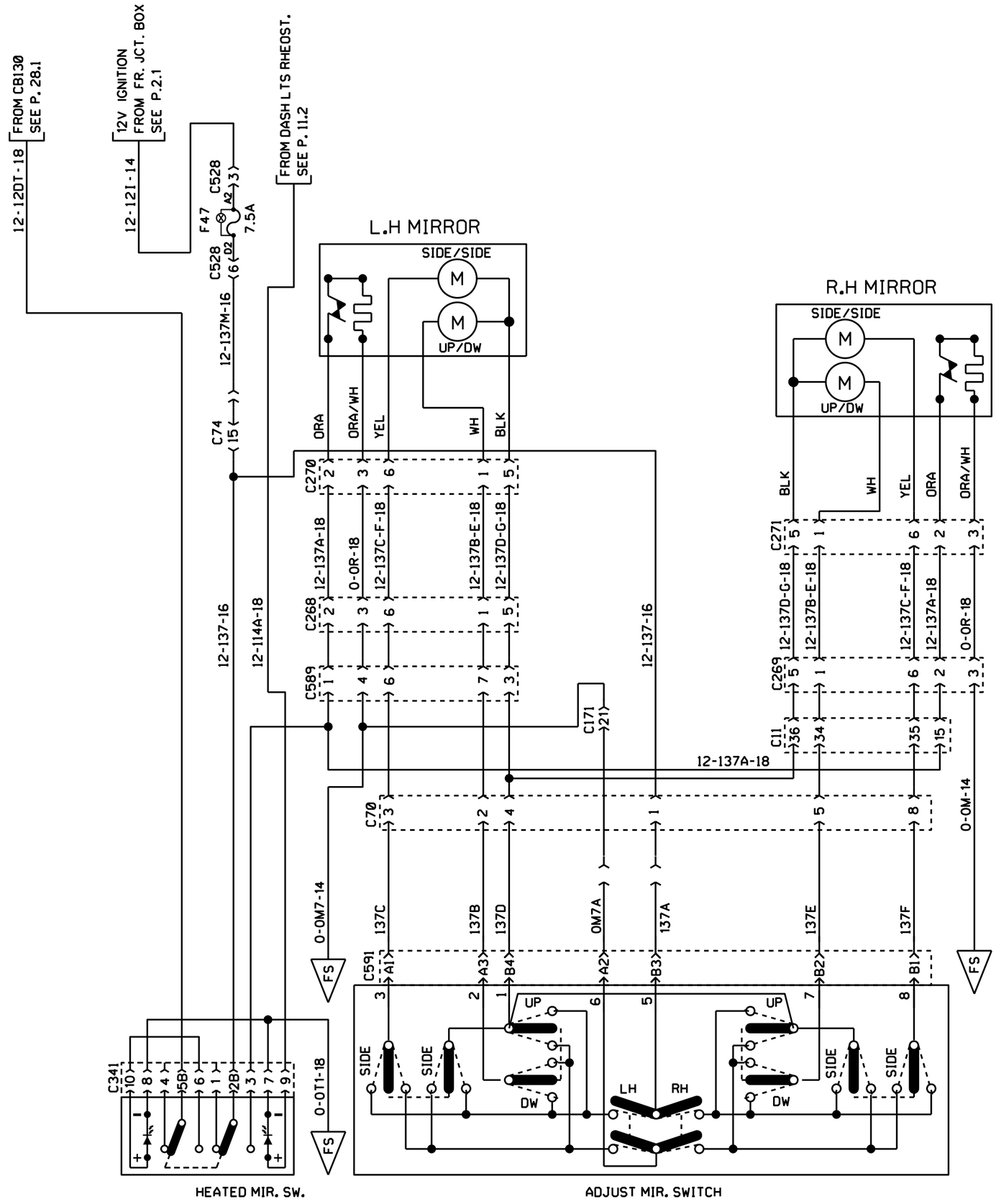

REAR VIEW MIRROR RAMCO FLAT - 1 ADJUSTMENT SW. & 1 HEATED SW.

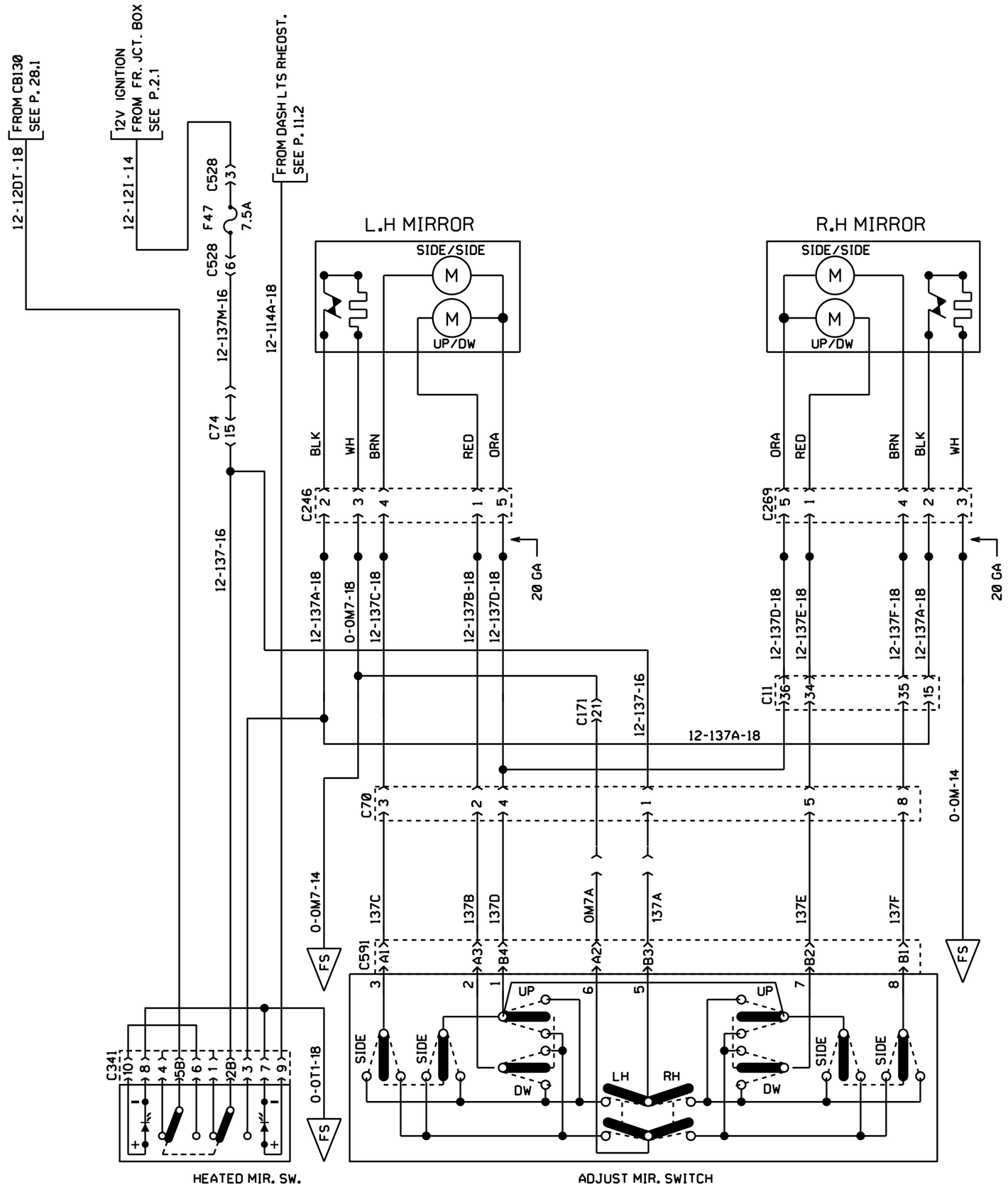

REAR VIEW MIRROR RAMCO FLAT - 1 ADJUSTMENT SW. & 1 HEATED SW.

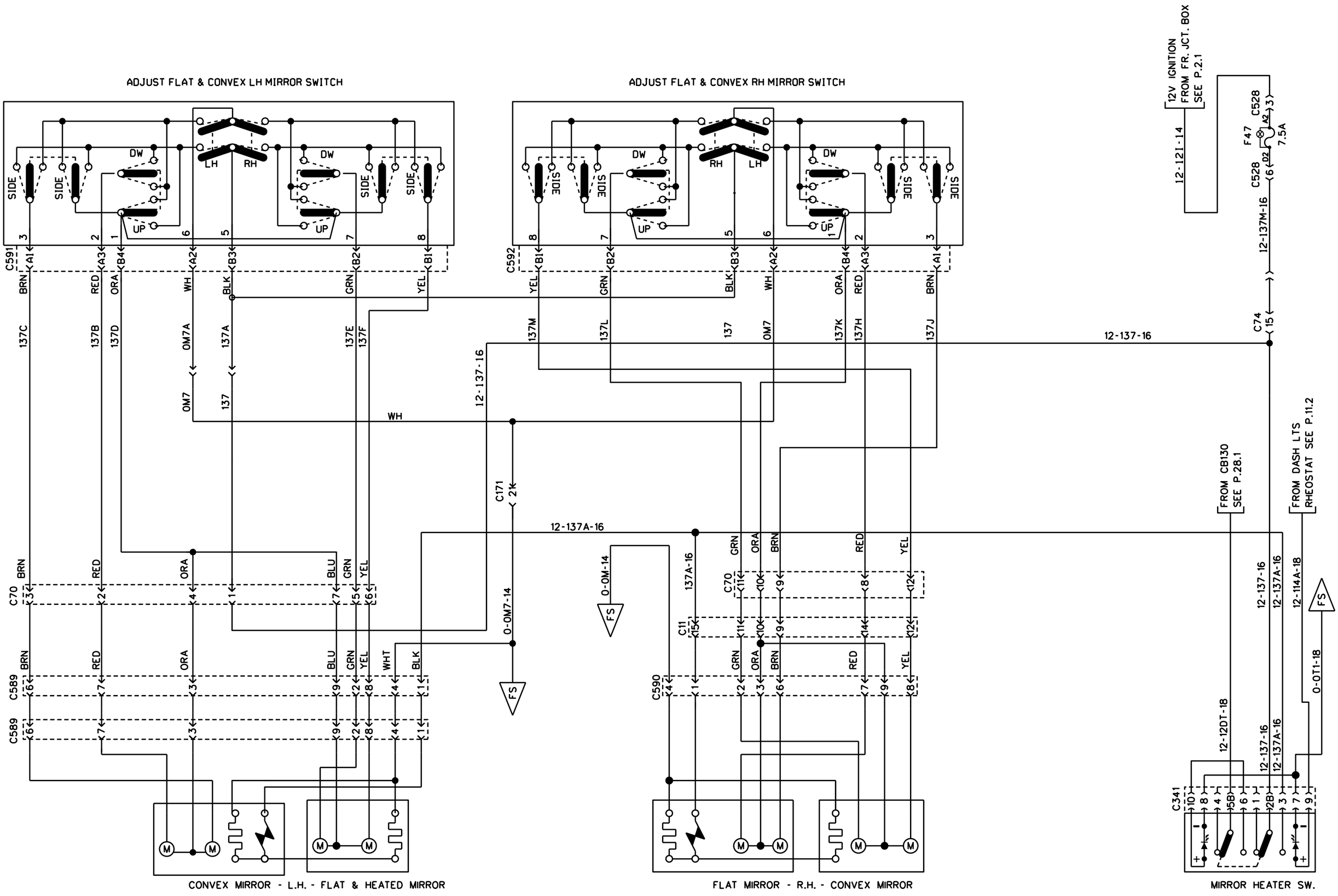

REAR VIEW MIRROR RAMCO FLAT & CONVEX - 2 ADJUSTMENT SW. & 1 HEATED SW.

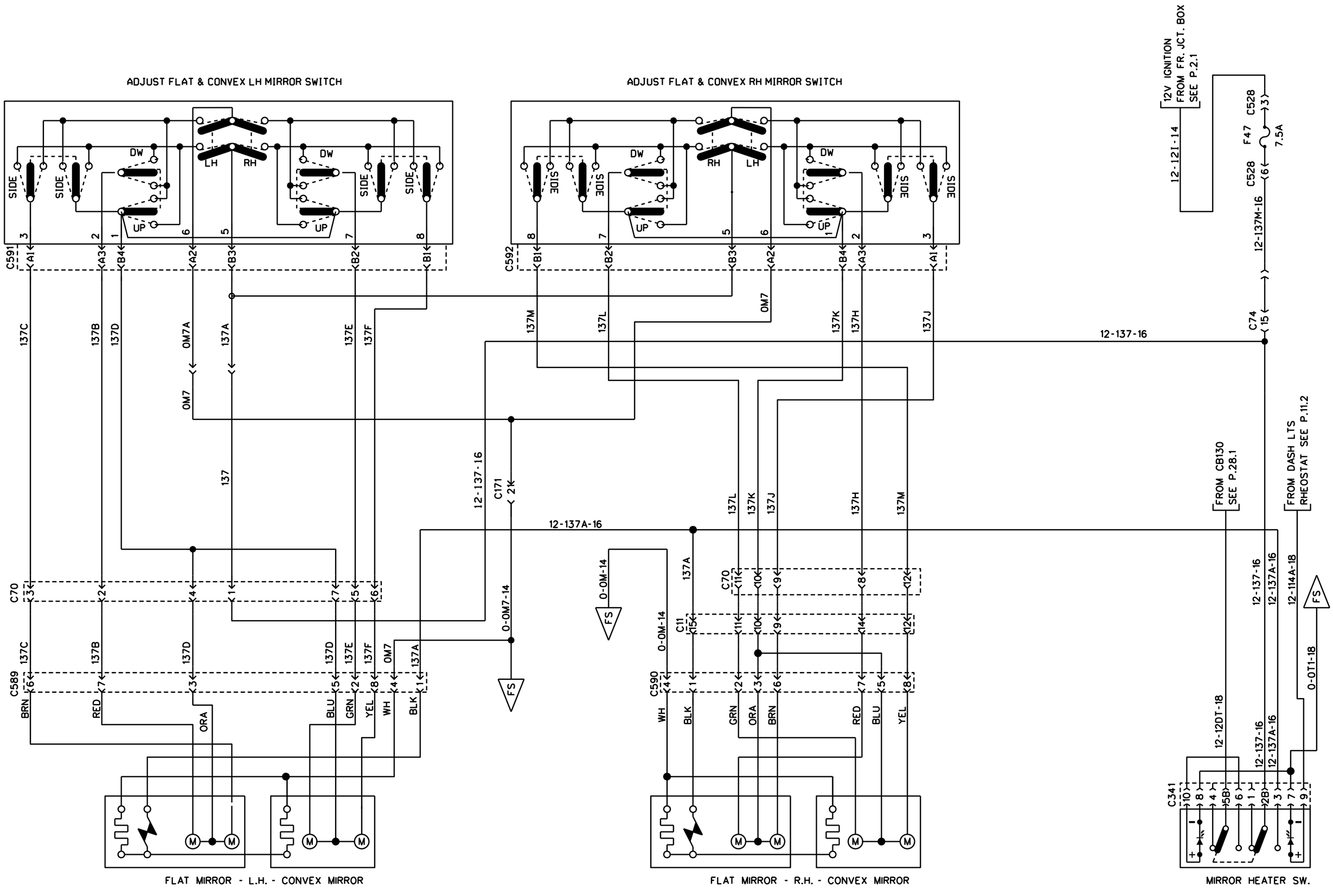

REAR VIEW MIRROR RAMCO FLAT & CONVEX - 2 ADJUSTMENT SW. & 1 HEATED SW.

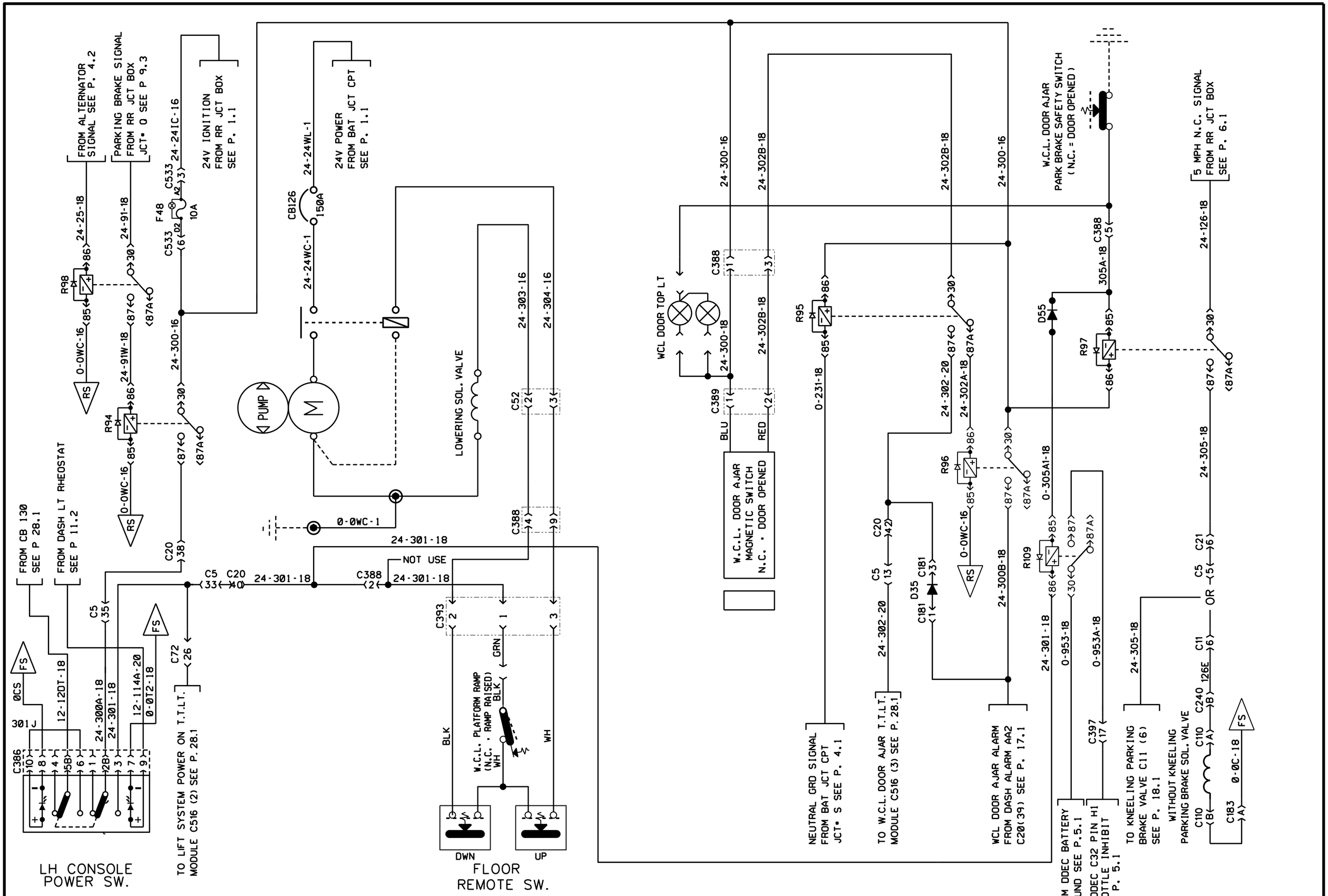

W.C.L. SYSTEM STEWART & STEVENSON

PREVOST	WIRING DIAGRAM	NO: D0609769	PAGE: 25.1	REVISION 00

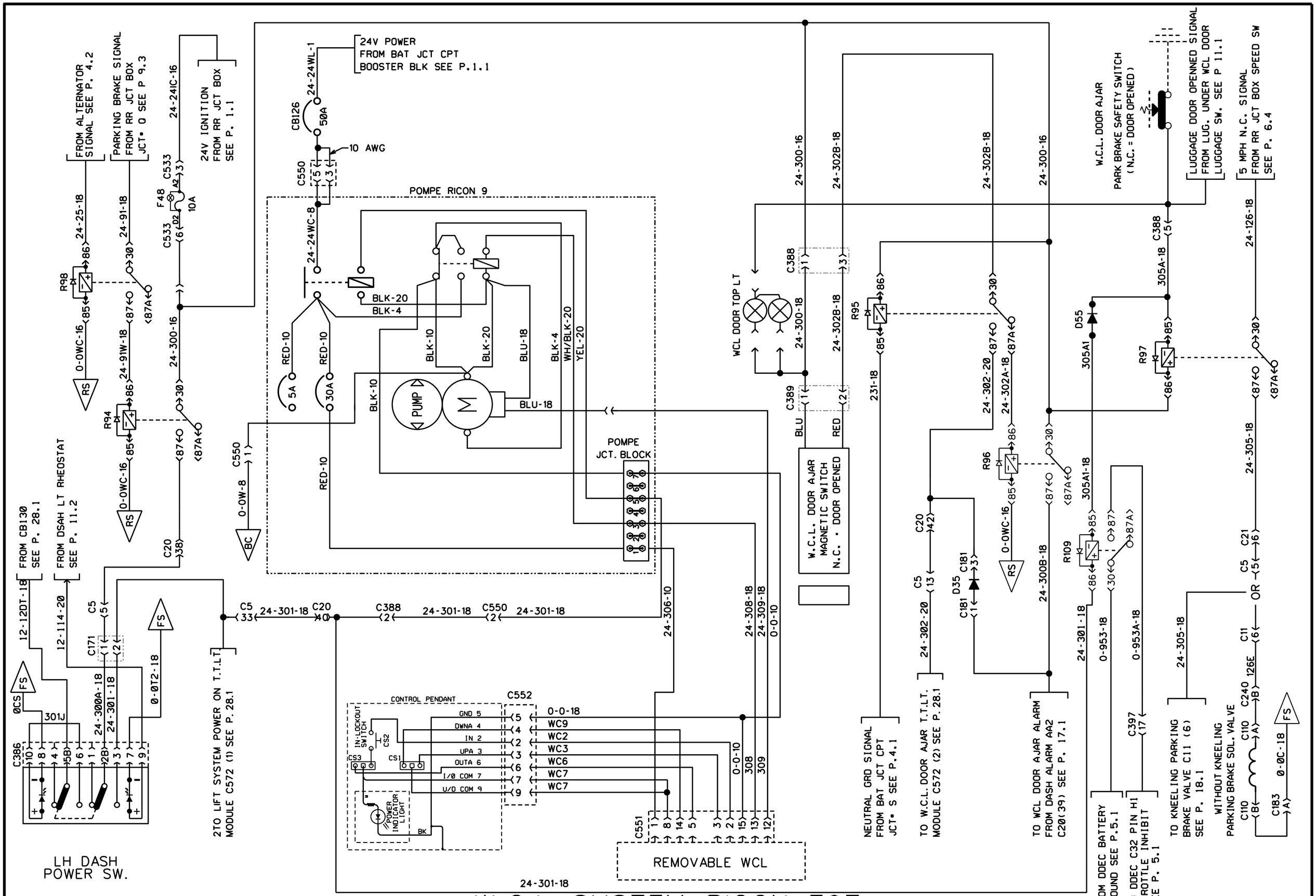

W.C.L. SYSTEM RICON F9T

PREVOST	WIRING DIAGRAM	NO: D060976	PAGE: 25.2	REVISION 00

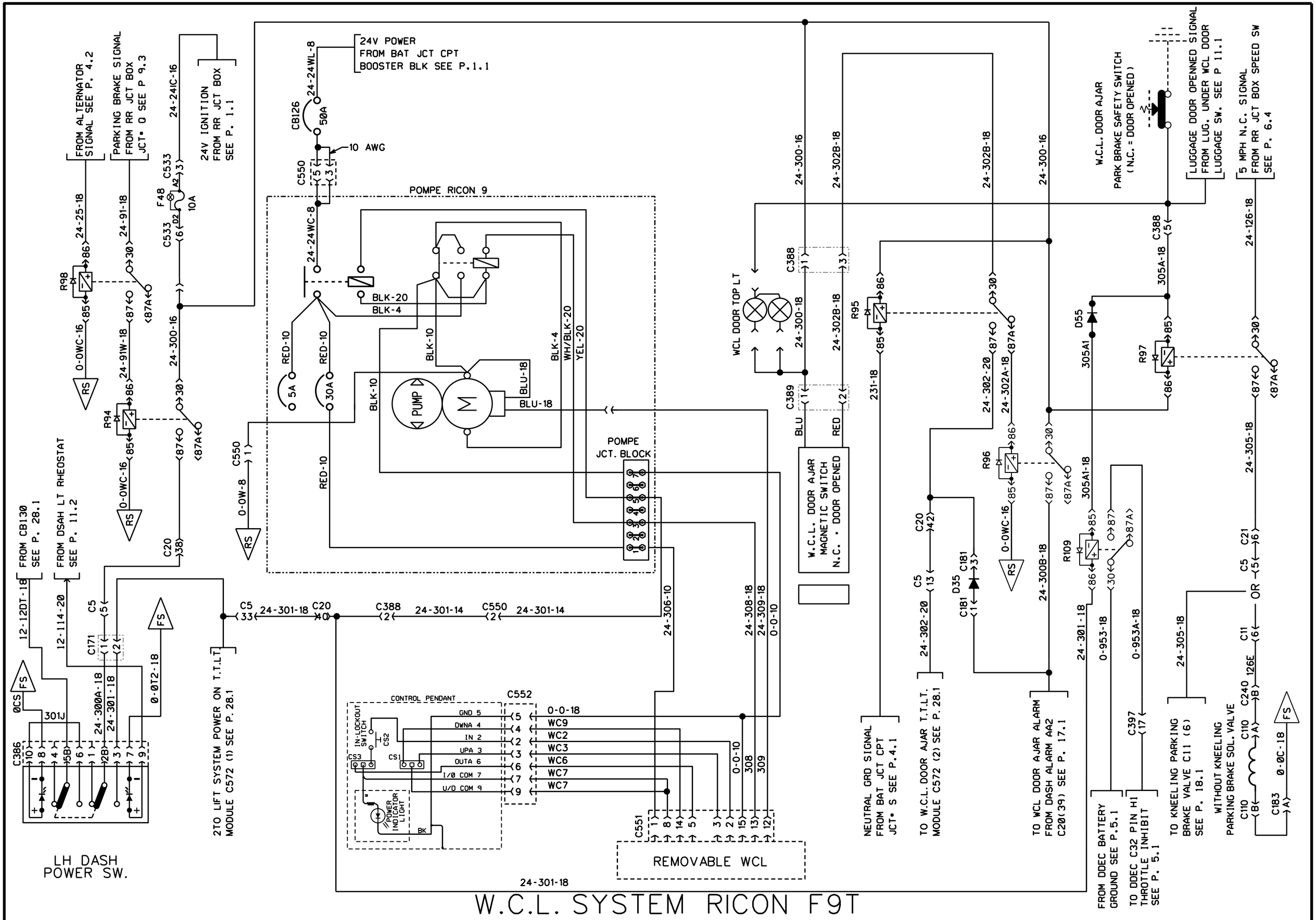

W.C.L. SYSTEM RICON F9T

PREVOST	WIRING DIAGRAM	NO: D060976	PAGE: 25.2	REVISION 01

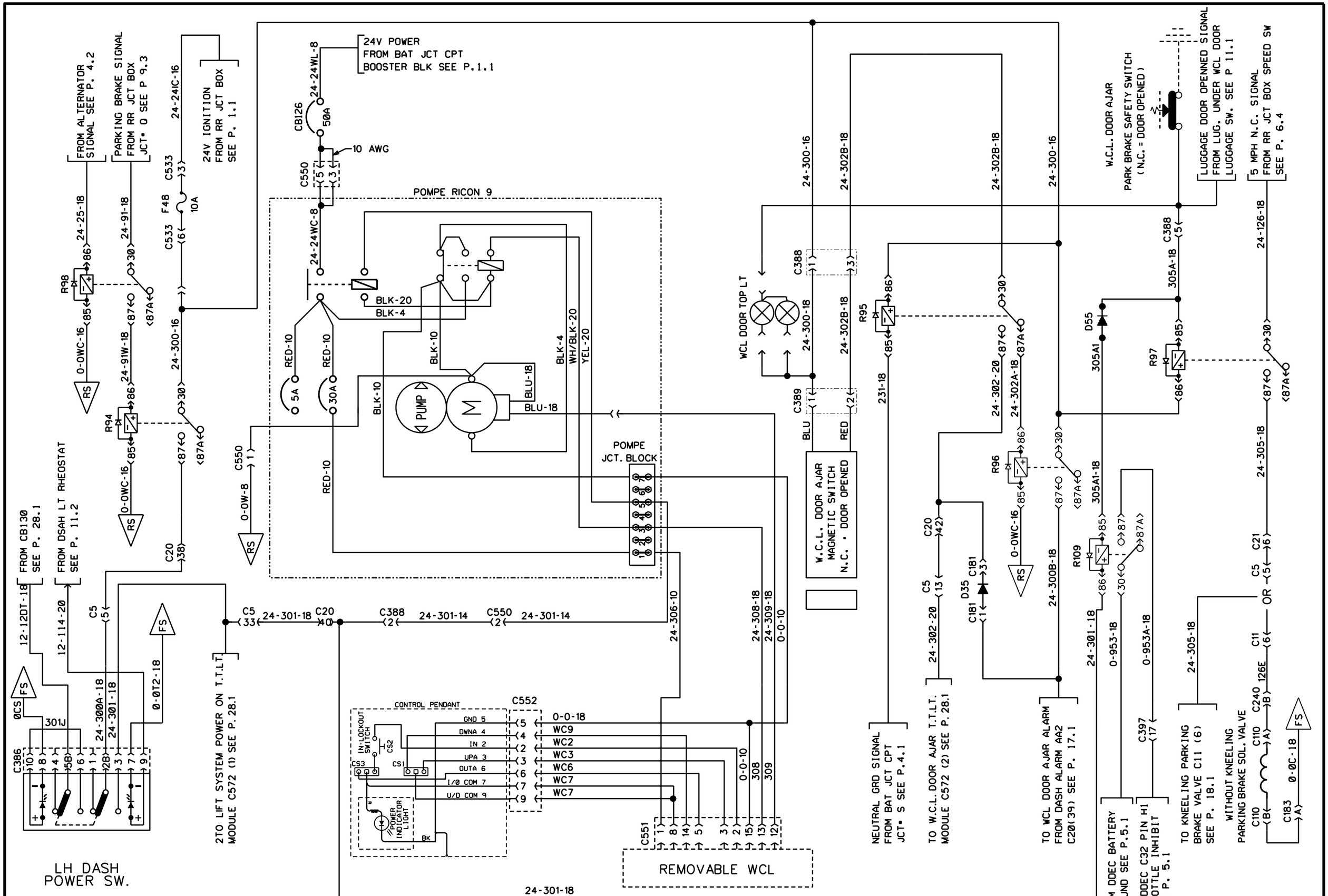

W.C.L. SYSTEM RICON F9T

PREVOST	WIRING DIAGRAM	NO: D060976	PAGE: 25.2	REVISION 04

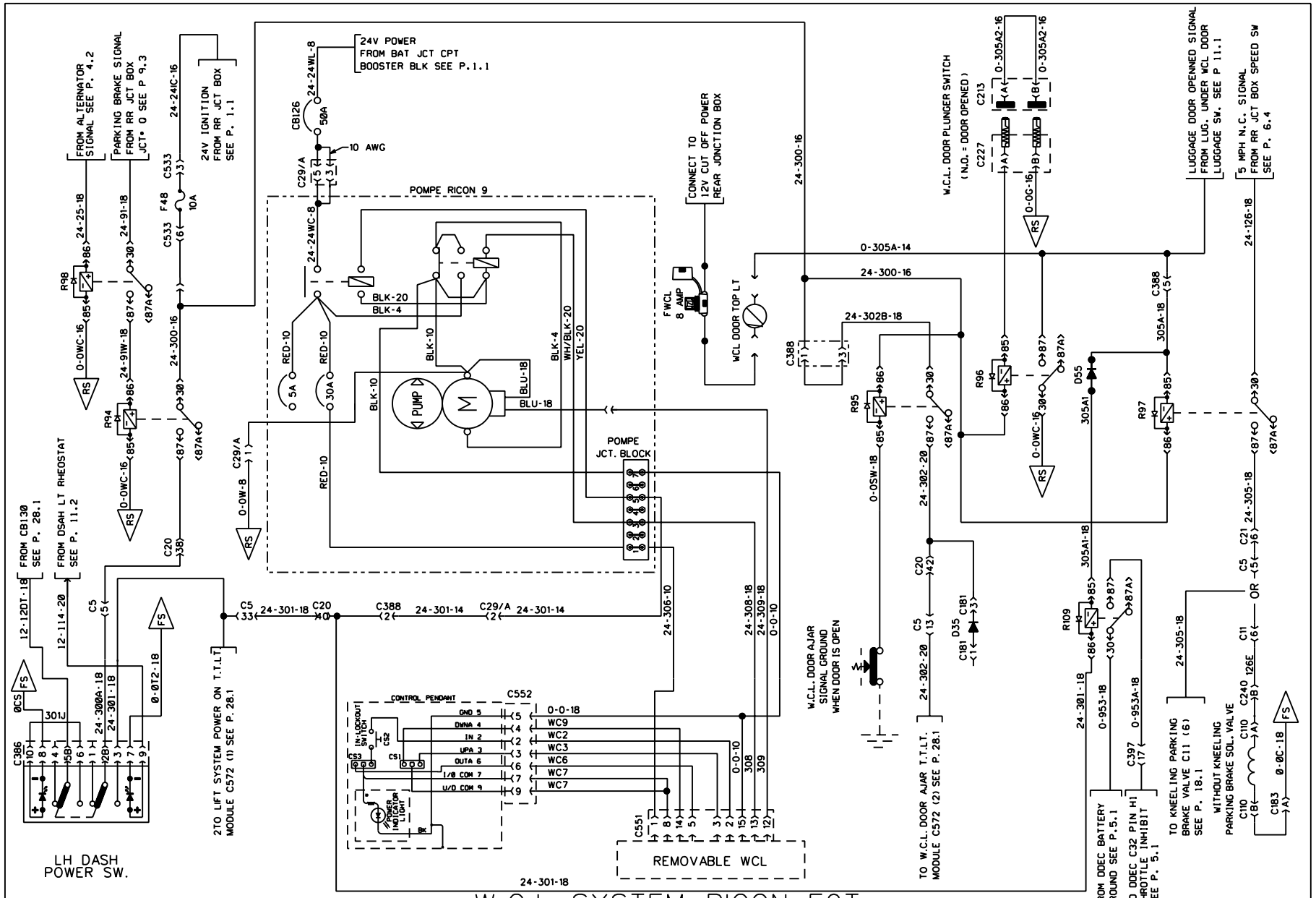

TRAVAIL A FAIRE LORS DU BRANCHEMENT DE LA NOUVELLE COUETTE ACCESSOIRE WCL DANS LA BOITE DE JONCTION ARRIERE.
-BRANCHER FIL 05W (DOOR OPEN SIGNAL) SUR LA PIN 85 DE R95 A LA PLACE DU FIL 231. ELIMINER FIL 231.
-BRANCHER FUSIBLE FWCL SUR UN 12V COUTEAU BORNE D OU E.
-MODIFIER LE BRANCHEMENT DE R96 COMME SUIT:
1-ELIMINER LES FILS 302A PIN 86 ET 300B PIN 87.
2-PRENDRE LE FIL 300 QUI EST DANS LA PIN 30 ET LE BRANCHER A LA PIN 86.
3-PRENDRE LE FIL 0WC QUI EST DANS LA PIN 85 ET LE BRANCHER A LA PIN 30.
4-PRENDRE LE FIL 305A DE LA NOUVELLE COUETTE ACCESSOIRE WCL ET LE BRANCHER A LA PIN 87.
4-PRENDRE LE FIL 305A2 DE LA NOUVELLE COUETTE ACCESSOIRE WCL ET LE BRANCHER A LA PIN 85.

PREVOST	WIRING DIAGRAM	NO: D060976	PAGE: 25.2 Sp1	REVISION 00

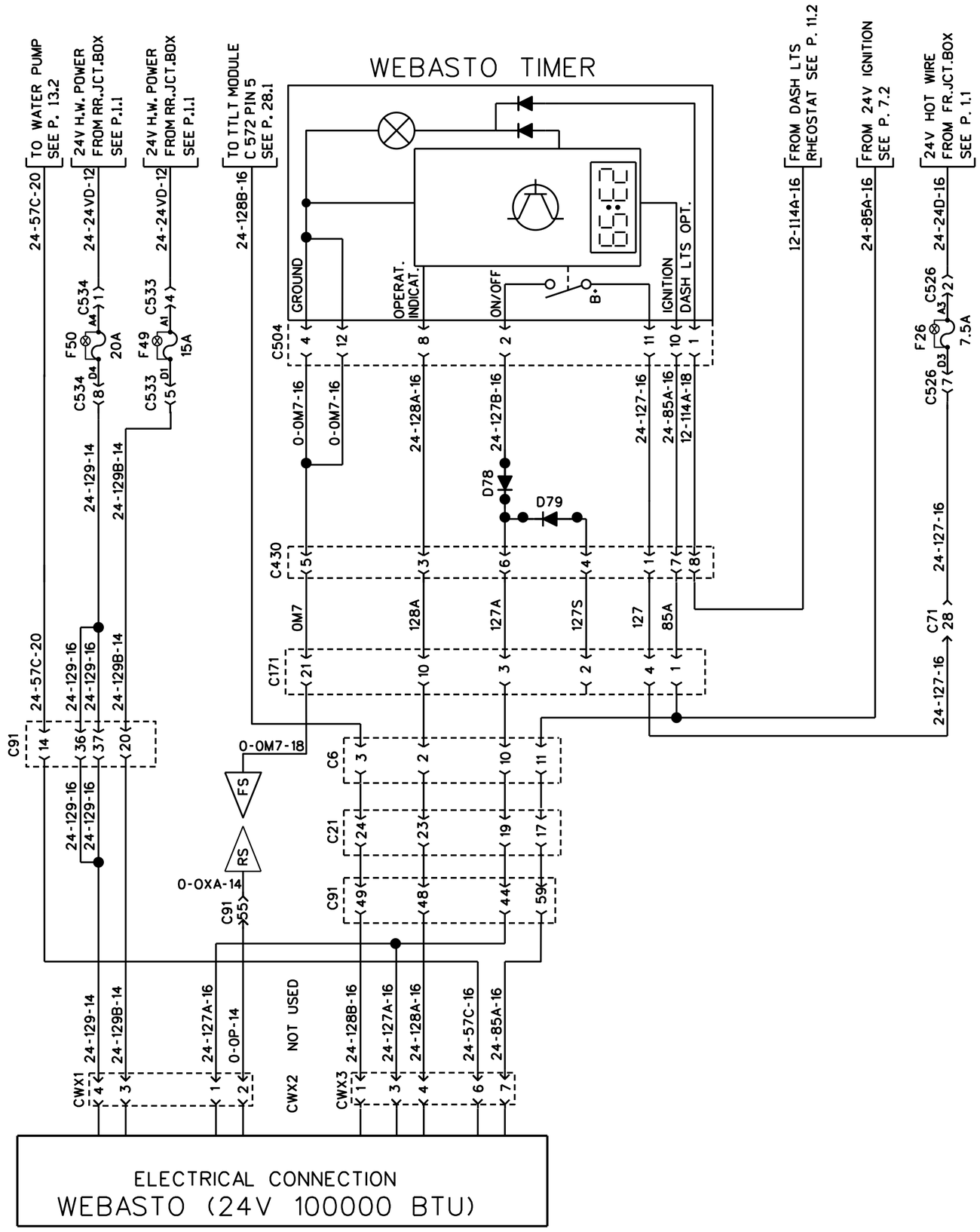

PRE-HEAT WATER HEATER (WEBASTO THERMO 300)

PREVOST	WIRING DIAGRAM	NO: D060976	PAGE: 26.1	REVISION 00

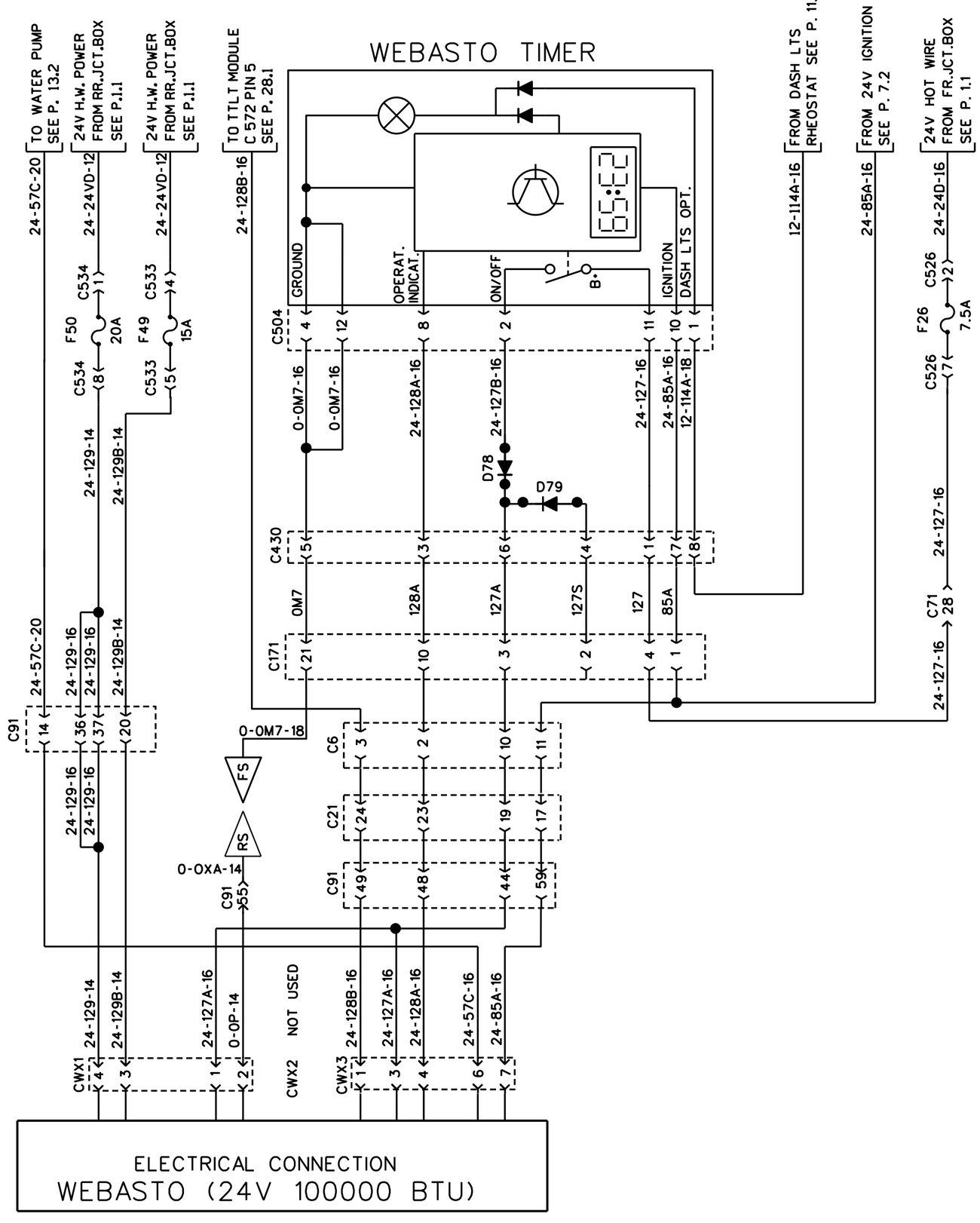

PRE-HEAT WATER HEATER (WEBASTO THERMO 300)

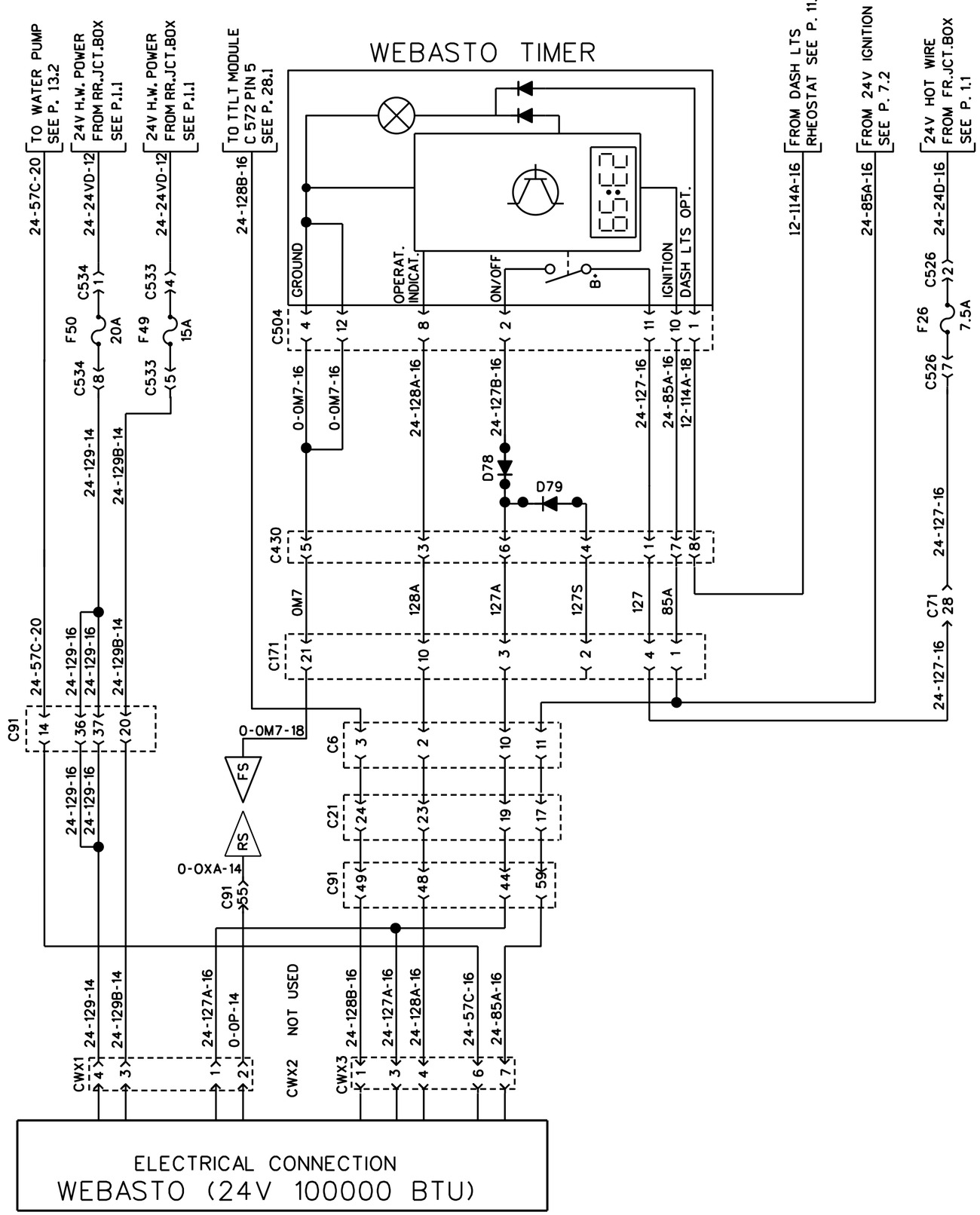

PRE-HEAT WATER HEATER (WEBASTO THERMO 300)

PREVOST	WIRING DIAGRAM	NO: D060976	PAGE: 26.1	REVISION 11

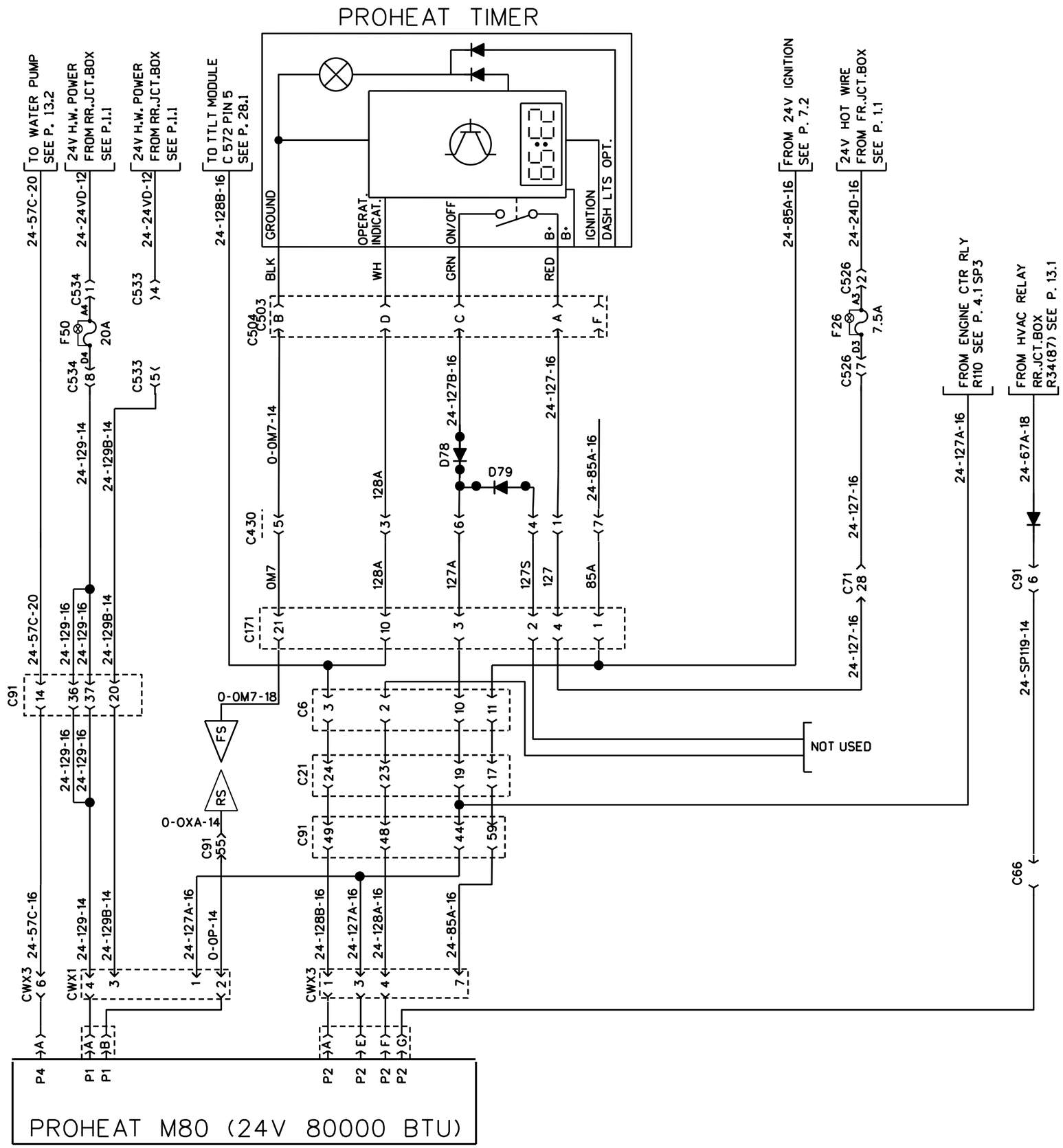

PRE-HEAT WATER HEATER (PROHEAT M80 AUTOMATIC ON A/C AND BATTERY CHARGER)

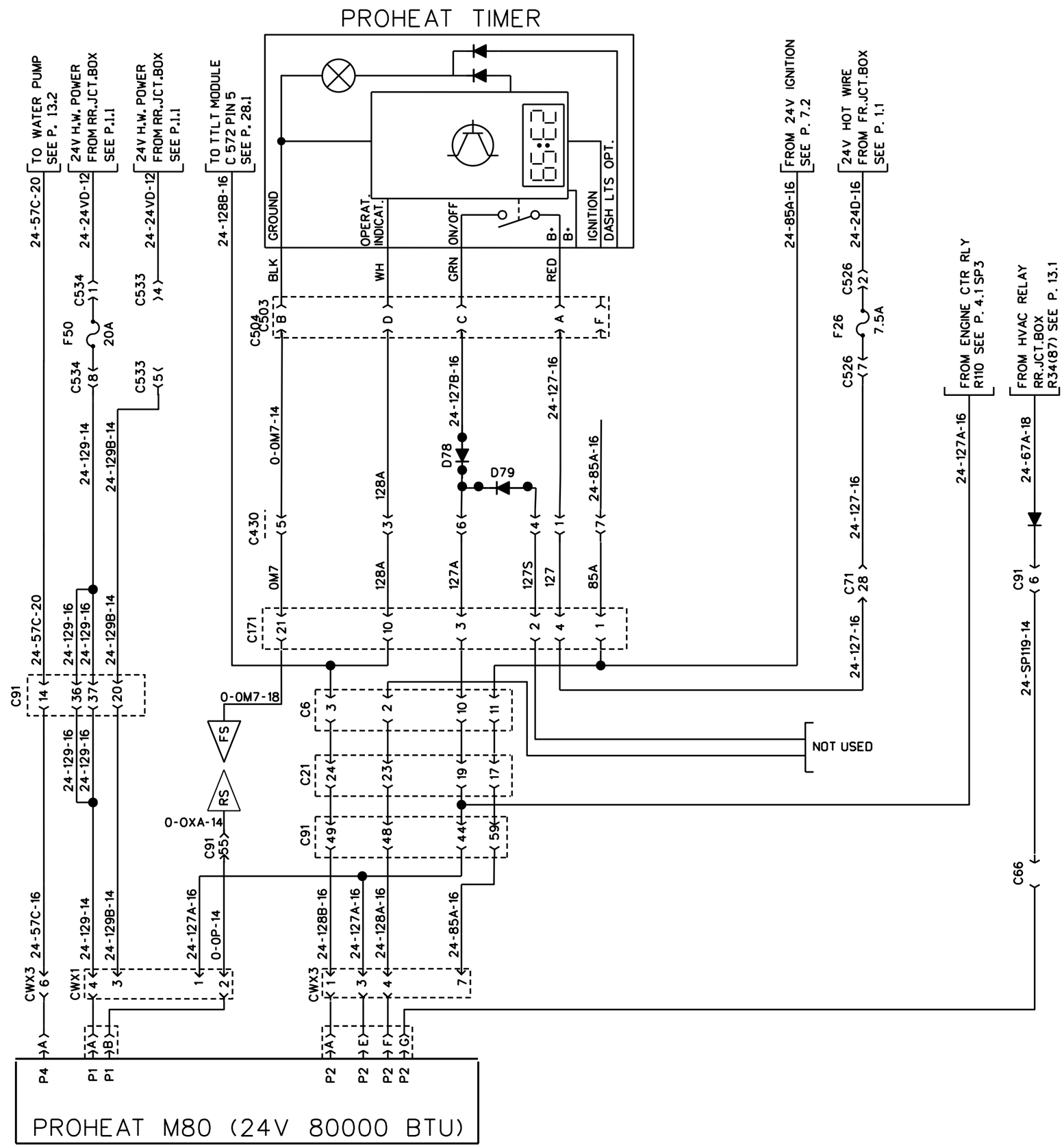

PRE-HEAT WATER HEATER (PROHEAT M80 AUTOMATIC ON A/C AND BATTERY CHARGER)

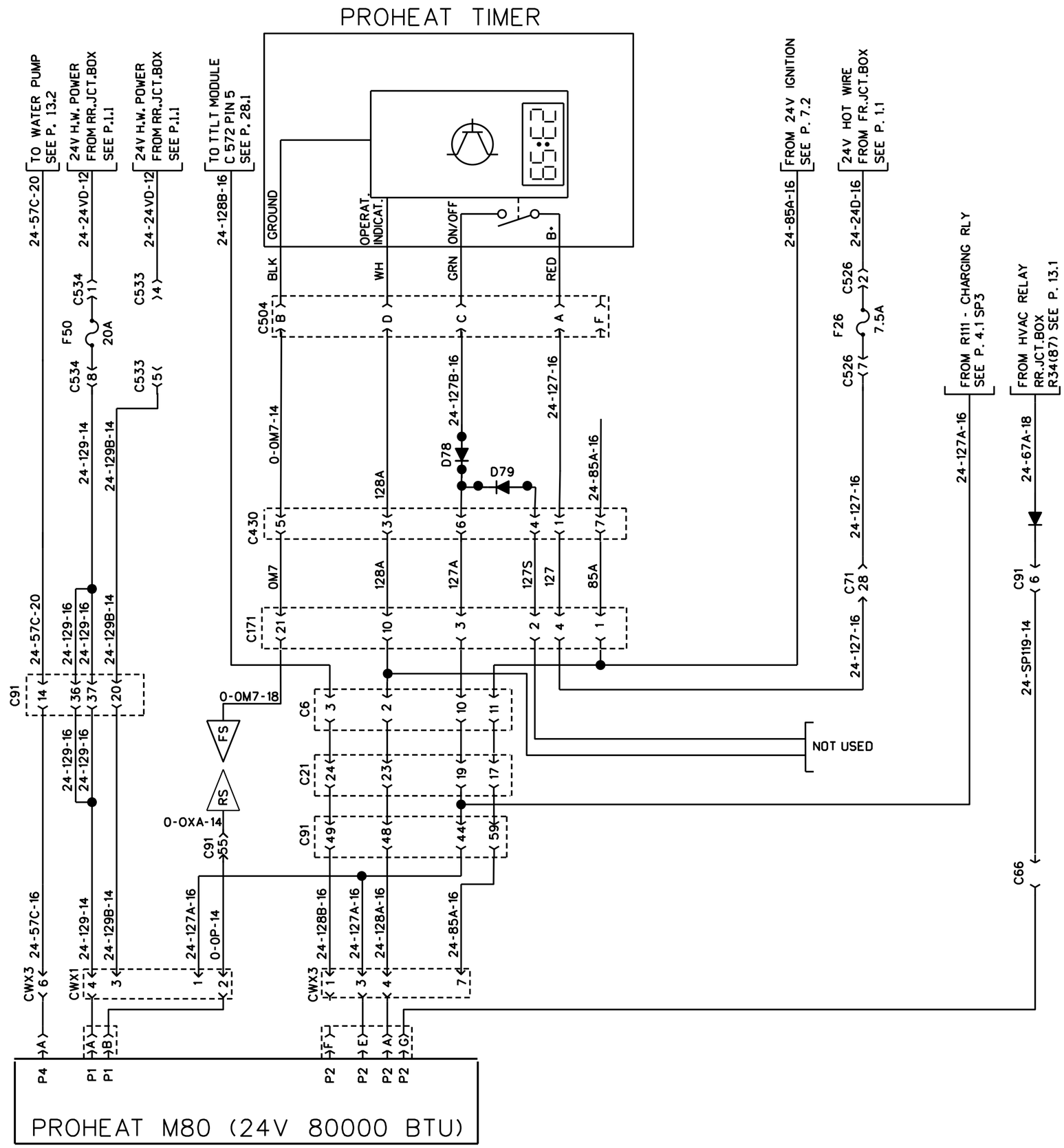

PRE-HEAT WATER HEATER (PROHEAT M80 AUTOMATIC ON A/C AND BATTERY CHARGER)

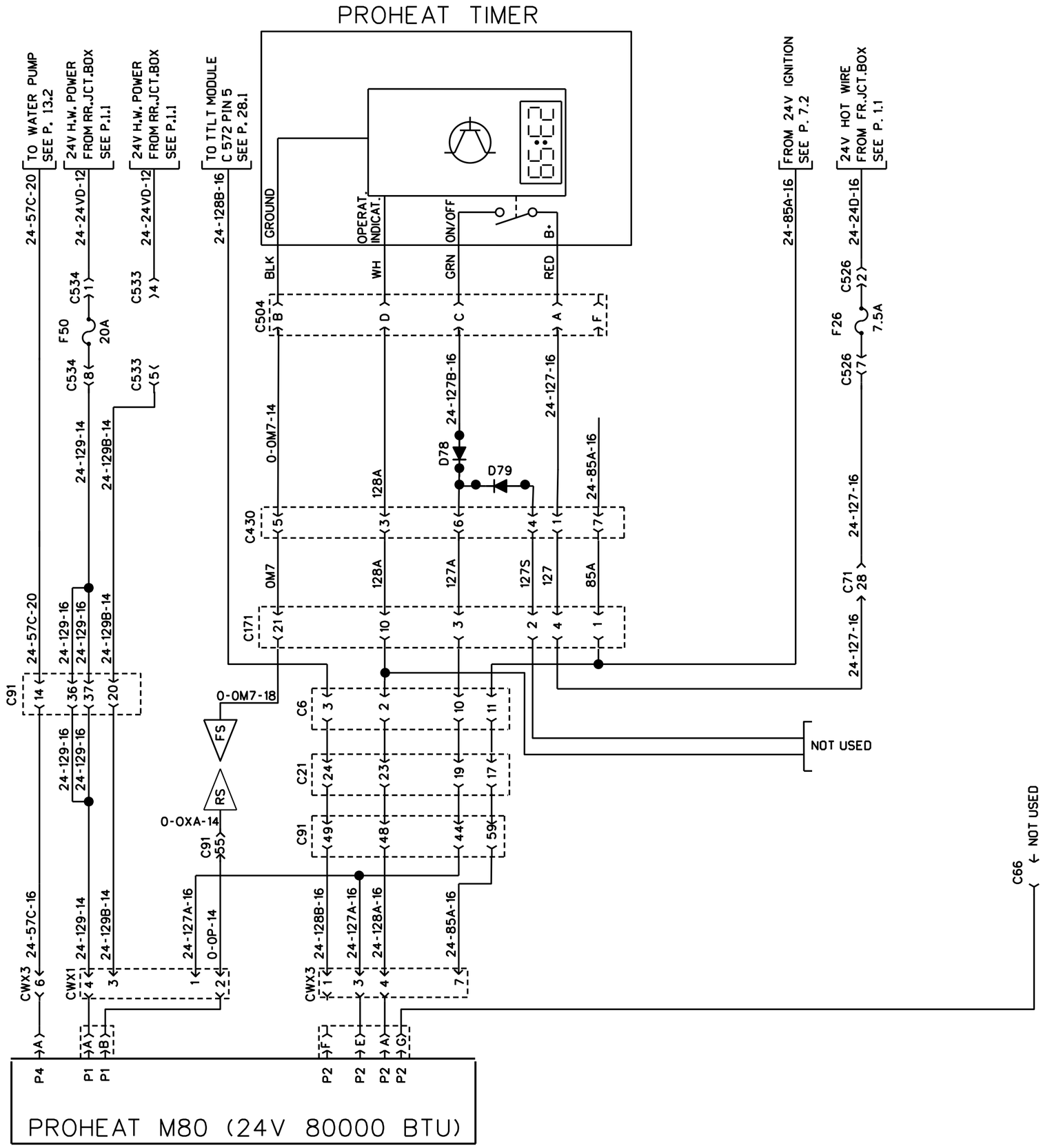

PRE-HEAT WATER HEATER PROHEAT M80

PREVOST	WIRING DIAGRAM	NO: D060976	PAGE: 26.2sp2	REVISION 00

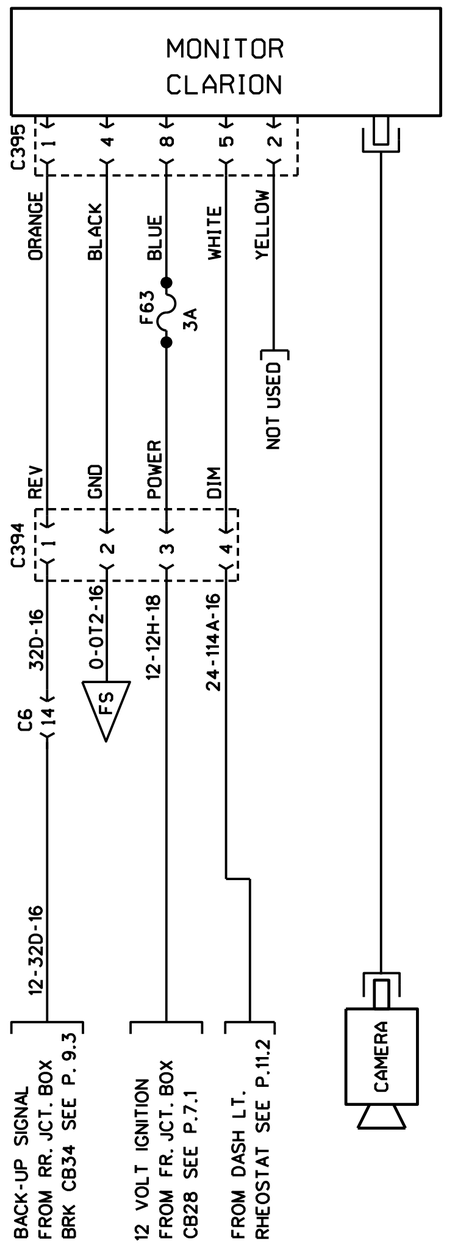

BACK-UP MONITOR (CLARION)

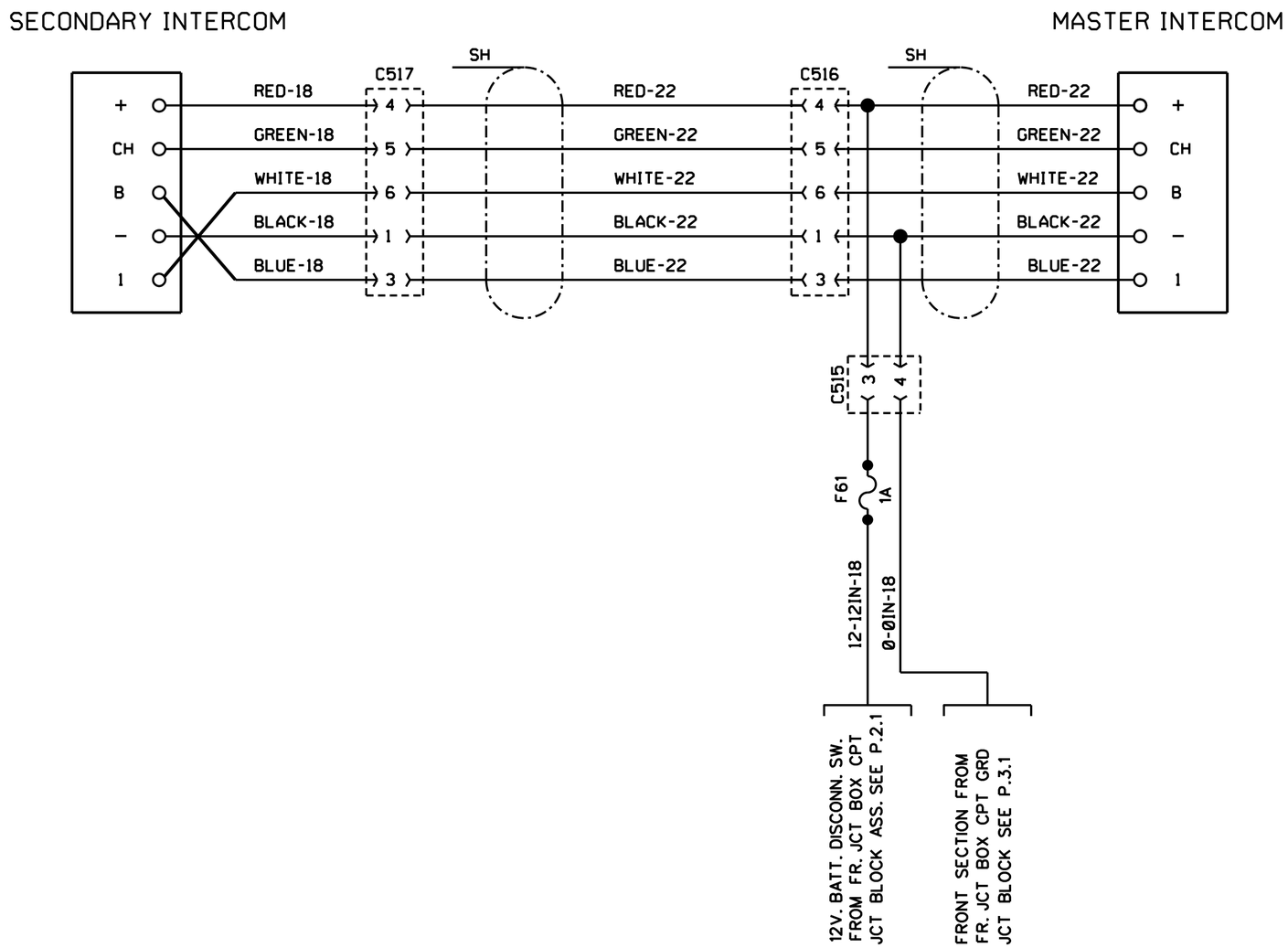

INTERCOM

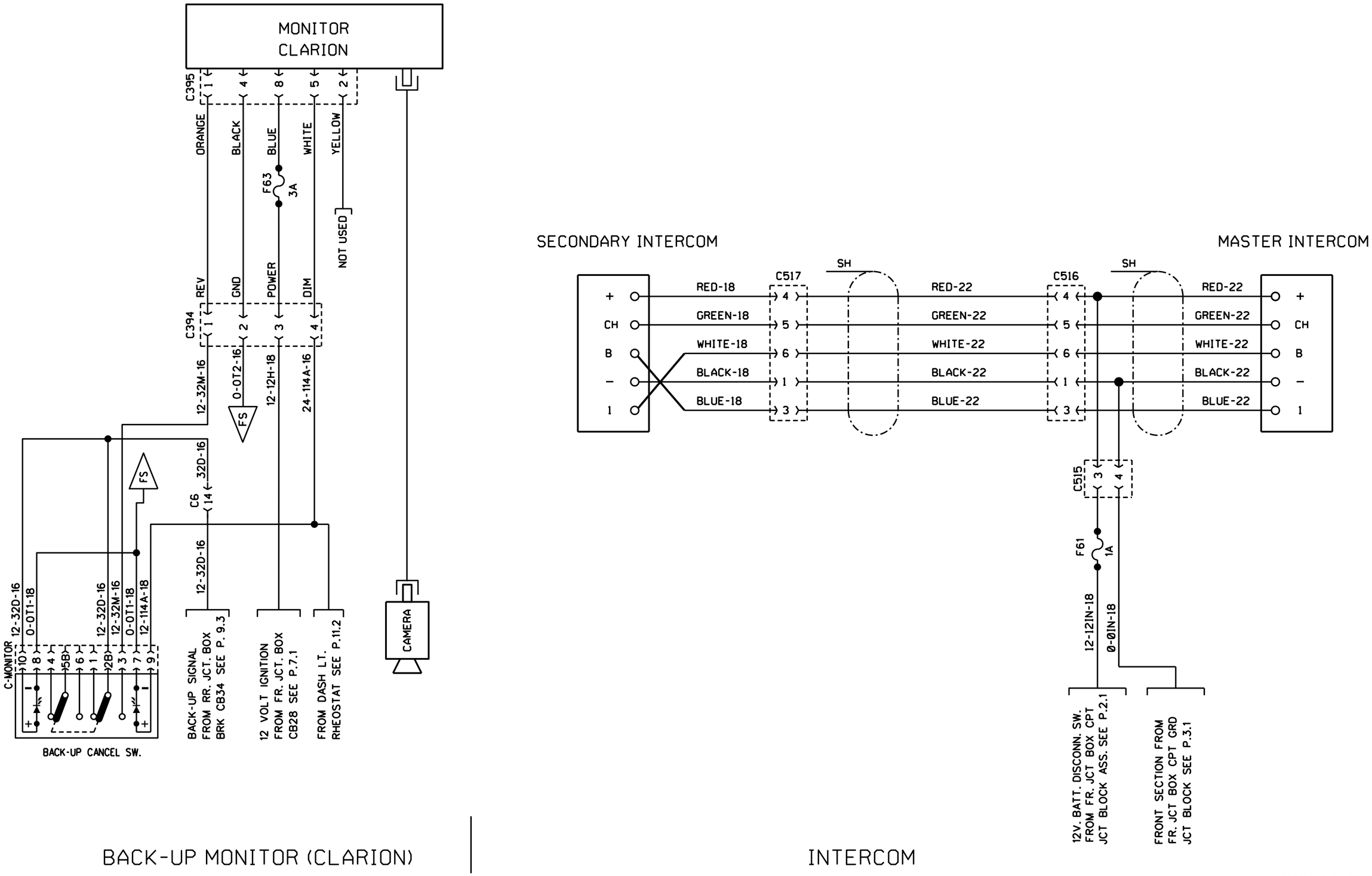

SPECIAL BACK-UP SWITCH CANCEL ADDED

PREVOST	WIRING DIAGRAM	NO: D060976	PAGE: 27.1sp1	REVISION 00

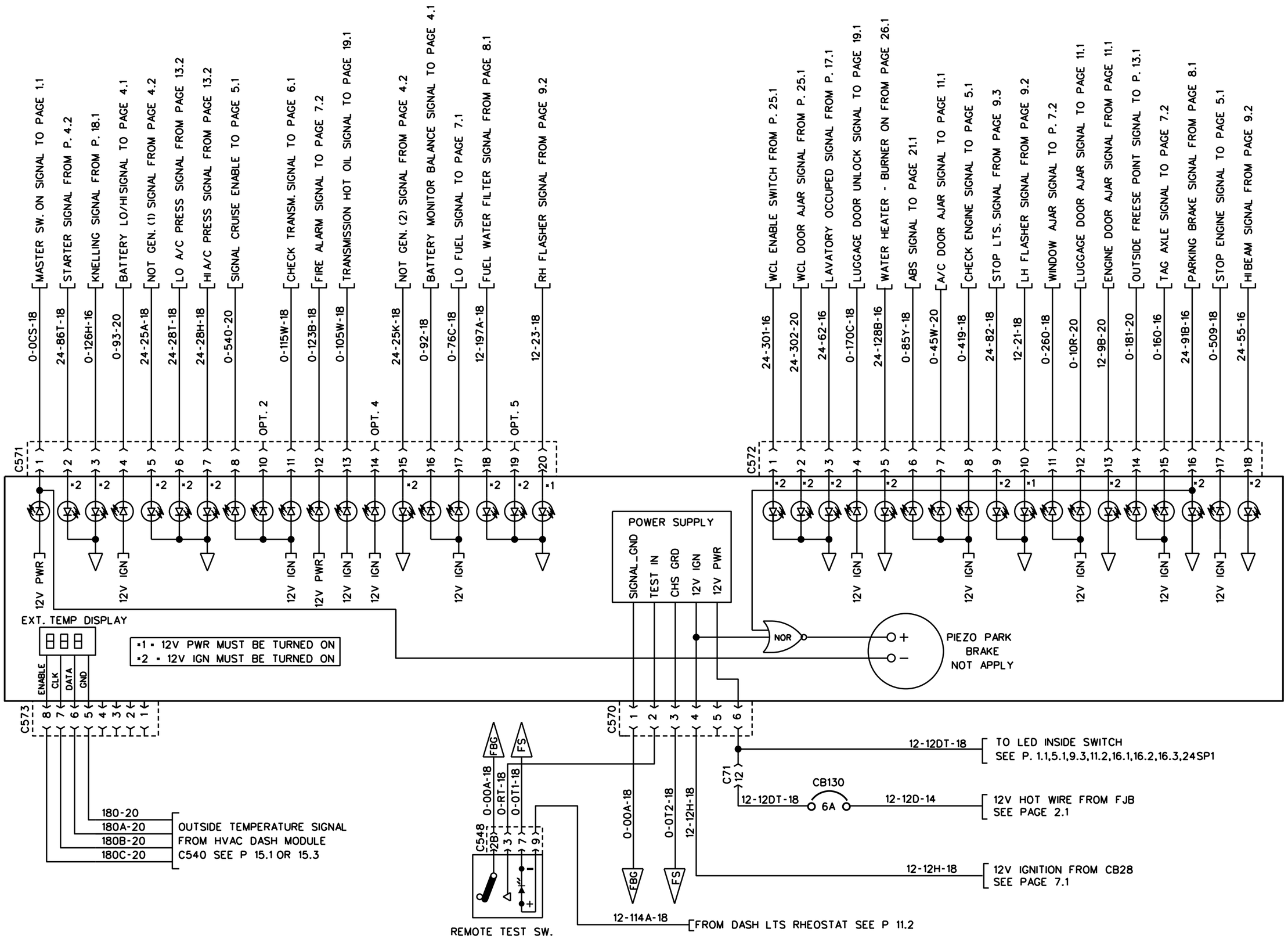

TELL TALE LIGHTS MODULE

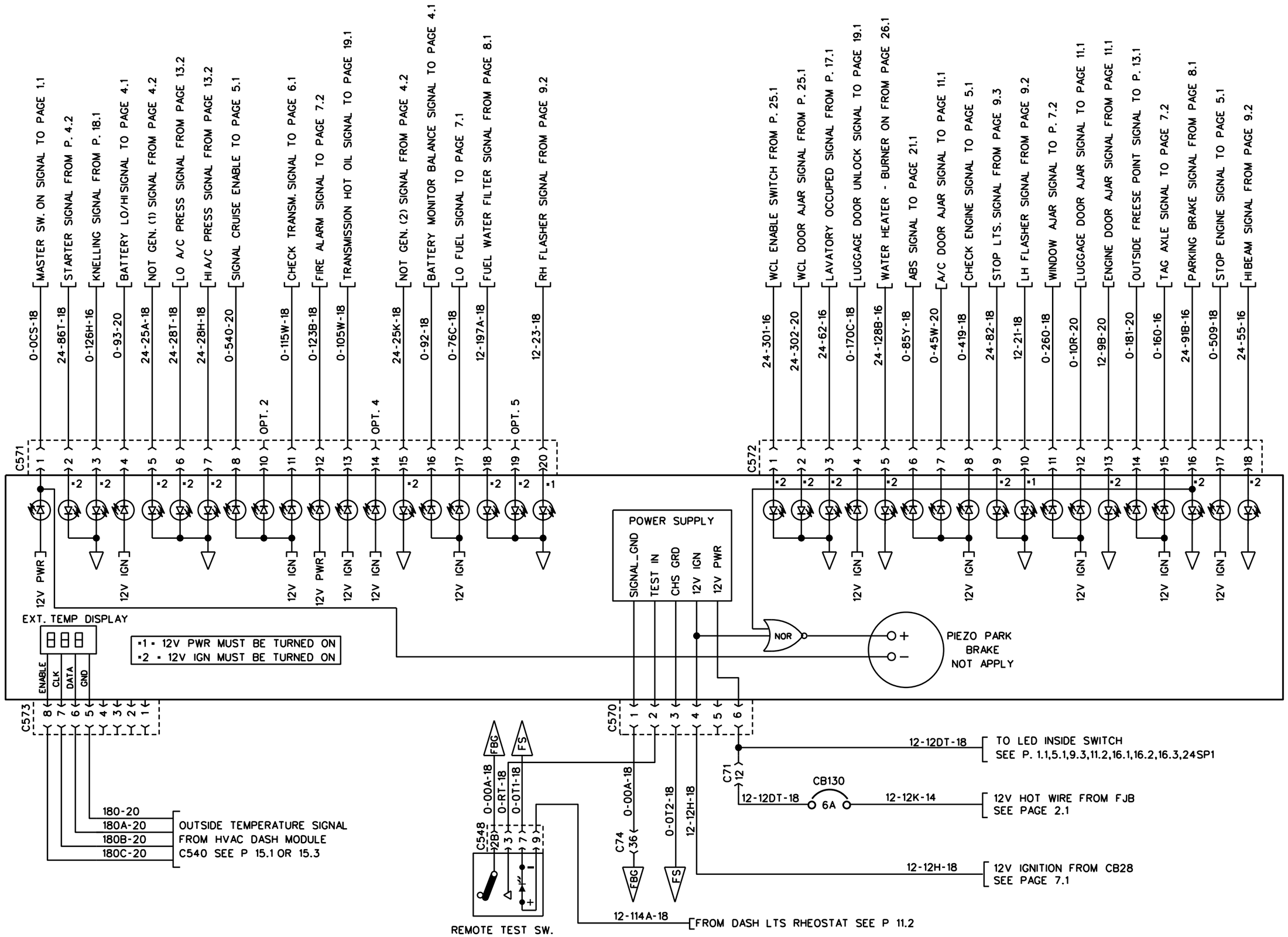

TELL TALE LIGHTS MODULE

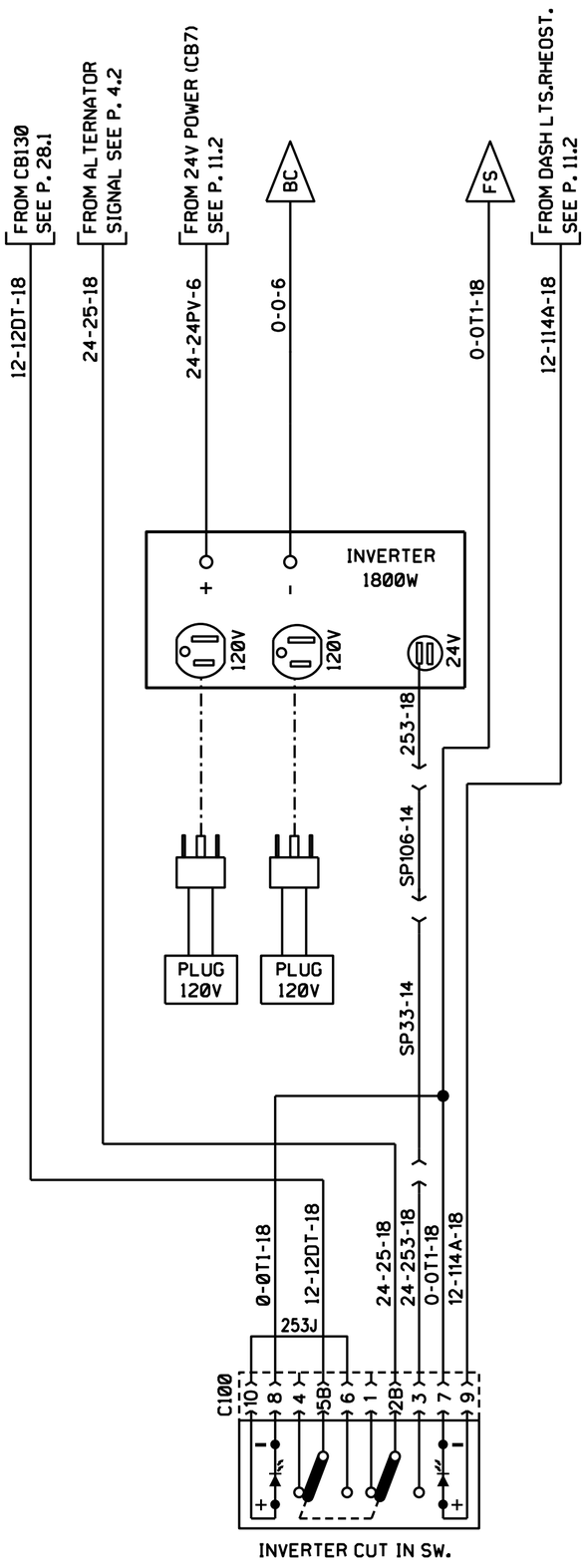

PLUG 120 VOLT

PREVOST	WIRING DIAGRAM	NO: D060976	PAGE: 29.1	REVISION 00

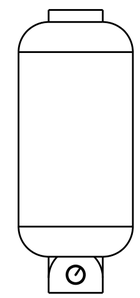

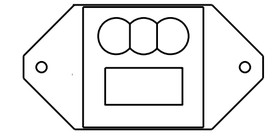

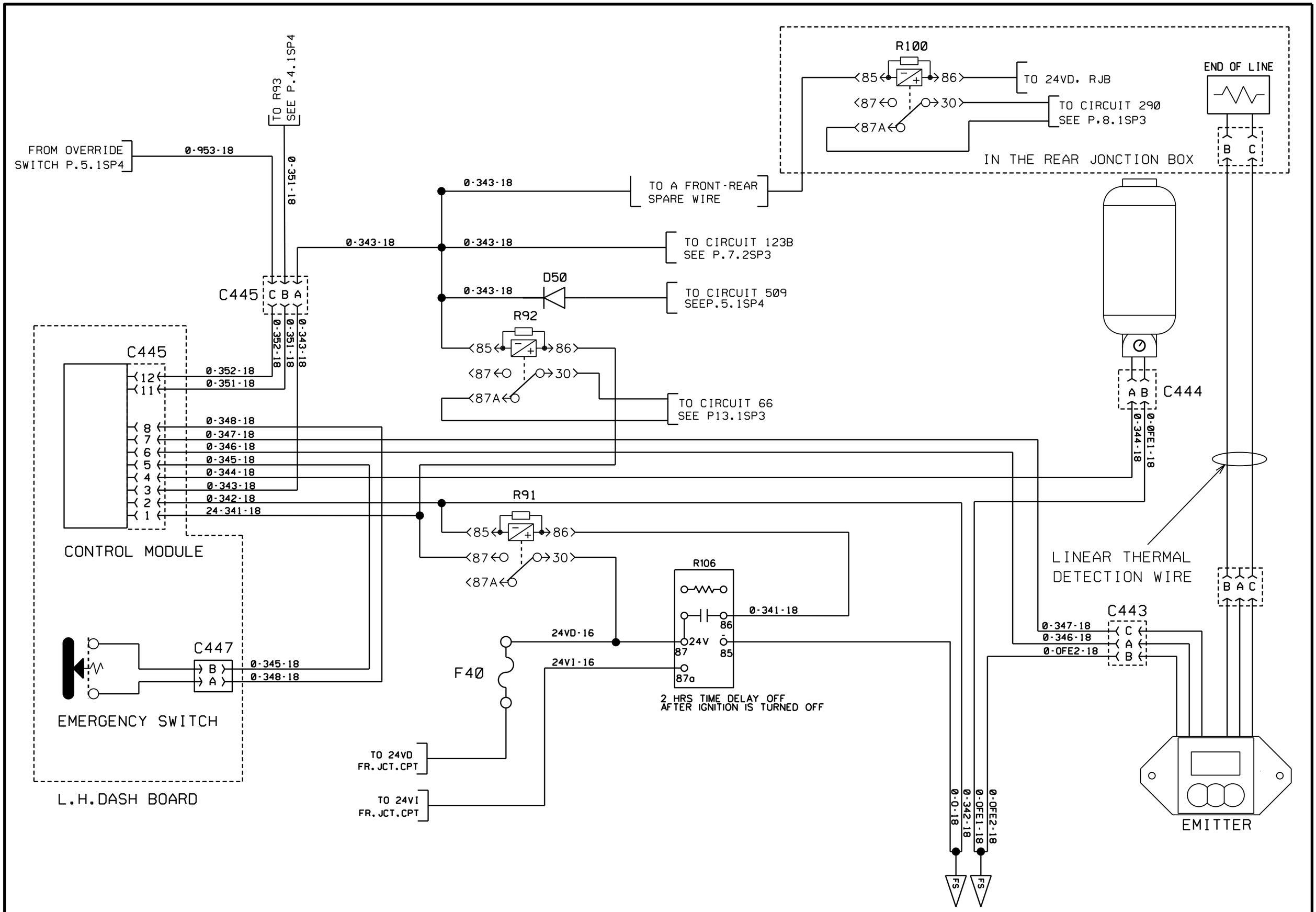

PREVOST	WIRING DIAGRAM	NO: D060976	PAGE: 31.1	REVISION 00

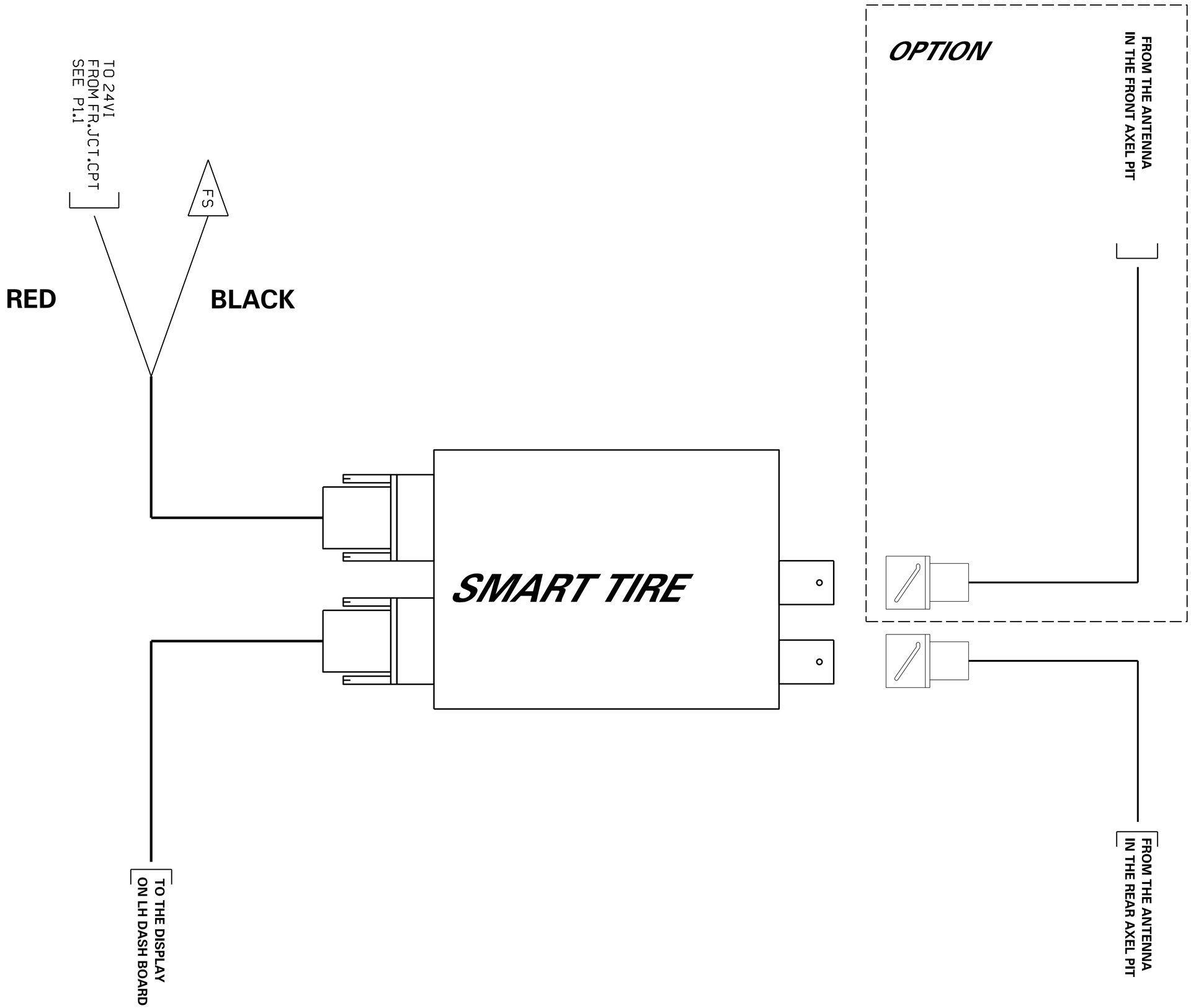

PREVOST	WIRING DIAGRAM	NO: D060976	PAGE: 31.2	REVISION 00